| | | |
|---|---|---|
| **1ère DATE D'EDITION**<br>*1st DATE PUBLICATION* | **E04.02** | **CODE** / *CODE* : 2420340450<br>**TYPE** / *TYPE* : STAR 8 *(STAR 22J)* - STAR 10 *(STAR 26J)* |

| **DATE D'EDITION** /<br>*DATE PUBLICATION* | **OBSERVATION** /<br>*OBSERVATION* | **DEMANDE DE MODIFICATION** /<br>*REQUEST OF MODIFICATION* |
|---|---|---|
| E01.12 | **Mise à jour globale du catalogue PR /**<br>*Complete update of the spare parts catalog* | NE SC 00053 |
| | | |

## PROCEDURE DE COMMANDE DE PIECE

Les conseillers pièces de rechange Haulotte Services sont toujours à votre écoute pour vous aider à identifier la pièce dont vous avez besoin.
Pour éviter toute erreur d'identification de pièce, nous vous recommandons de préciser ces éléments lors de votre commande :

- numéro de série de la machine
- code catalogue et édition
- référence de la pièce souhaitée
- quantité souhaitée

## *PARTS ORDER PROCEDURE*

*Haulotte Services parts advisors remain at your full disposal to help you identify the parts you need.*

*To avoid any wrong part identification, we recommend you to advice HAULOTTE the following details when ordering:*

- *machine serial number*
- *manual reference and edition*
- *part number*
- *quantity*

**▲ CAPOTAGE CHÂSSIS** ◀ A-12 ▶

| Rep. | Désignation | Designation | Specification | Qty | Code | Up to / jusqu'à |
|---|---|---|---|---|---|---|
| 1 | CAPOT CHÂSSIS | | | 1 | 183P235590 | |
| 2 | CAPOT CHÂSSIS | | | 1 | 183P233930 | |
| 3 | CAPOT DE PROTECTION | PROTECTIVE HOOD | | 4 | 158P235560 | |
| 4 | VIS | SCREW | H M10X30-26 CL.8.8 ZB | 24 | 2301231760 | |
| 5 | RONDELLE ÉLASTIQUE | RUBBER WASHER | W 10 ZB | 24 | 2351201090 | |
| 6 | RONDELLE PLATE | FLAT WASHER | L 10 ZB | 12 | 2351113090 | |

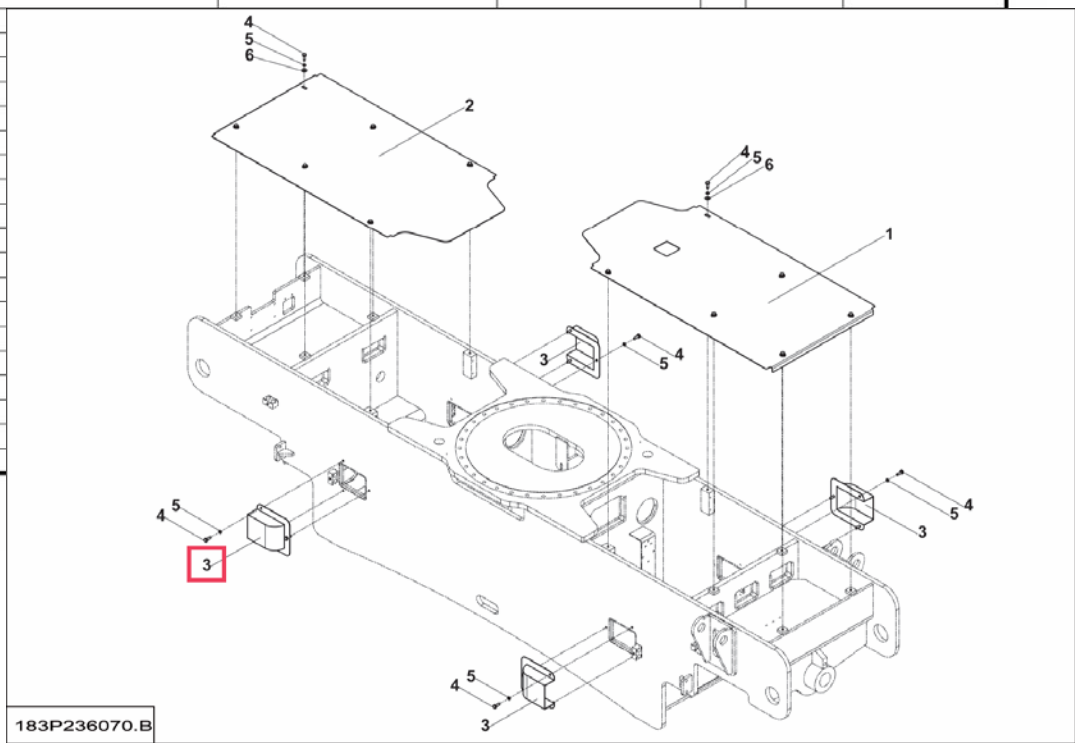


Exemple pour une H43TPX (HB135JRT) :

- N° série : TD104469
- Info catalogue : 2420338890 E10.08
- Réf. Pièce : 158P235560
- Qté : 2

*Example for a H43TPX (HB135JRT):*

- *Serial nb : TD104169*
- *Manual's data : 2420338890 E10.08*
- *P/N 158P235560*
- *Qty : 2*

Afin de mieux vous servir et de vous permettre d'obtenir la meilleure autonomie possible ; HAULOTTE Services a élaboré 2 types de listes de pièces de rechange pour chacune de vos machines :

1) **Les listes de première urgence**

Ce type de liste inclut les pièces identifiées comme étant à l'origine de pannes remettant en cause l'utilisation ou la disponibilité de votre machine.

Les listes de première urgence sont généralement livrées dans les boites ci-dessous afin de minimiser leur encombrement et vous permettre un rangement rapide selon le type de machine.
Compte tenu de leur faible valeur, nous vous recommandons vivement le stockage de ces listes.

2) **Les listes de maintenance**

Ce type de liste inclut la liste de première urgence et une sélection supplémentaire de pièces stratégiques pour vous assurer pleinement de la disponibilité de votre machine.

Merci de prendre contact avec votre interlocuteur HAULOTTE Services habituel.

---

In order to ensure your total satisfaction, along with a freedom and independence in maintaining your machine, HAULOTTE Services has developed two different levels of recommended spare parts list.

1) **Emergency recommended spare part list**

This list contains the more common spare parts that may be required, and was developed to minimise breakdown delays and maximise machine utilisation.

With a specific list produced for each range of machine, this list is supplied in a convenient carry box (shown below), minimising bulk and allowing fast access for when required.
With excellent pricing being offered, we strongly recommend having this kit on hand at your office or workshop.

2) **Full recommended maintenance spare parts list**

This more comprehensive list includes the same items at our emergency list, but also includes a strategic selection of parts used in preventative maintenance.

Please contact your usual HAULOTTE Services representative for further detail.

**Recommended Spare parts lists**
**Liste de préconisation**

# STAR 8-10 NG

| DESCRIPTION | DESCRIPTIVE | REFERENCE | FIRST EMERGENCY LIST | FULL MAINTENANCE LIST | QTY |
|---|---|---|---|---|---|
| AUTOCOLLANT COFFRET NACELLE | LABEL UPPER CONTROL PANEL | 2420342380 | X | X | 1 |
| **AUTOCOLLANT COFFRET TOURELLE** | **LABEL BOTTOM CONTROL PANEL** | **2420342320** | **X** | **X** | **1** |
| AVERTISSEUR 2 BORNES 24 V | BUZZER | 2440103120 | X | X | 1 |
| **CONNECTEUR PESAGE** | **OVERLOAD CONNECTOR** | **24403015630** | **X** | **X** | **1** |
| BOUTON COUP DE POING | EMERGENCY STOP BUTTON | 2442009770 | X | X | 1 |
| **CAPTEUR DE PRESSION** | **PRESSURE SENSOR** | **2440309340** | | **X** | **1** |
| CAPTEUR D'ANGLE | ANGLE SENSOR | 2440309350 | | X | 1 |
| **BOUTON POUSSOIR NOIR** | **BLACK PUSH BUTTON** | **2440206800** | **X** | **X** | **1** |
| BOUTON POUSSOIR VERT | GREEN PUSH BUTTON | 2440206850 | X | X | 1 |
| **CHARGEUR** | **BATTERY CHARGER** | **2901009660** | **X** | **X** | **1** |
| CARTE SERIAL BAS 1170 | SERIAL PC BOARD BOTTOM PANEL | 2440316720 | | X | 1 |
| **CARTE SERIAL HAUT 1171** | **PC BOARD PLATFORM PANEL** | **2440316730** | | **X** | **1** |
| CARTOUCHE HYDRAULIQUE | HYDRAULIC CARTRIDGE | 2505000970 | X | X | 1 |
| **COMBINATEUR 3 POSITIONS** | **3 POSITION SWITCH** | **2442009600** | **X** | **X** | **1** |
| COMBINATEUR 3 POSITIONS A CLE | 3 POSITION SWITCH | 2901015410 | X | X | 1 |
| **COUPE BATTERIE** | **BATTERY CUT-OFF** | **2440306180** | **X** | **X** | **1** |
| FUSIBLE MEGA FUSE 250 AMP. | MEGA FUSE 250 A | 2440602480 | X | X | 1 |
| **INDICATEUR DE DECHARGE** | **DISCHARGE BATTERY INDICATOR** | **2440904140** | | **X** | **1** |
| INTERRUPTEUR | POSITION SWITCH | 2440901490 | X | X | 1 |
| **MANIPULATEUR BAS** | **JOYSTICK LOWER CONTROL BOX** | **2901011790** | **X** | **X** | **1** |
| MANIPULATEUR HAUT | JOYSTICK UPPER CONTROL BOX | 2441305250 | X | X | 2 |
| **PLATINE CIRCUIT** | **PRINTED CIRCUIT BOARD** | **2441605770** | | **X** | **1** |

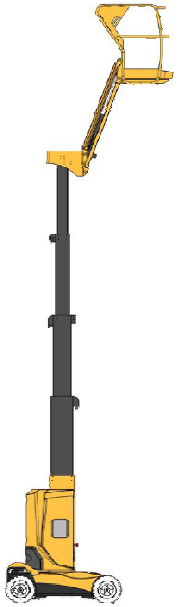

First emergency list

**Ref : LPE/STAR8-10NG**

Full maintenance list

**Ref : LPM/STAR8-10NG**

Haulotte SERVICES

Les informations ci-dessus sont à titre indicatif et non contractuelles
Above data are not contractual and for information only

# OPTIONS (ex : GRAND VENT, PANIER LARGE …)
# MISE EN GARDE
**********

**CERTAINES OPTIONS PEUVENT MODIFIER LES CARACTERISTIQUES D'UTILISATION DES MACHINES AINSI QUE LA SECURITE ASSOCIEE.**

Si votre machine a été délivrée d'origine avec une option, le remplacement d'une pièce de sécurité de cette option ne nécessite pas de précaution particulière autre que celles liées à l'installation elle-même (test statique).

**DANS LE CAS CONTRAIRE, IL EST IMPERATIF DE SUIVRE LES RECOMMENDATIONS CONSTRUCTEUR SUIVANTES :**

- Installation par du personnel habilité par HAULOTTE GROUP seulement.
- Procéder à la mise à jour de la plaque constructeur.
- Faire procéder aux tests de stabilité de la machine par un organisme agréé.
- Procéder à la mise en conformité des étiquettes

# OPTIONS (ex: STRONG WIND, LARGE BASKET…)
# WARNING
*********

**SOME OPTIONS MAY MODIFY THE CHARACTERISTICS OF MACHINE'S USE AS WELL AS THE ASSOCIATED SAFETY.**

If your machine has originally been delivered with one option, the replacement of a safety part of this option does not need specific precaution other than those related to the fitting itself (static test).

**IN OTHER CASES, IT IS IMPERATIVE TO FOLLOW THESE MANUFACTURER'S INSTRUCTIONS:**

- Installation by HAULOTTE GROUP certified staff only.
- Proceed to the update of manufacturer's plate.
- Organise the execution of machine's stability tests by an authorized body.
- Proceed to stickers' conformity.

# SOMMAIRE / *SUMMARY*


| Section | Groupes Machine | *Machine groups* | Commentaire / *commentary* | Page |
|---|---|---|---|---|
| **A** | **PARTIE BASSE** | ***BOTTOM PART*** | | **15** |
| 10 | ENSEMBLE CHASSIS | *CHASSIS ASSEMBLY* | STAR 8 (22J)_STAR 10 (26J) | 17 |
| 12 | ENSEMBLE CAPOTAGE | *COVER UNIT* | STAR 8 (22J)_STAR 10 (26J) | 19 |
| 31 | ESSIEU DIRECTEUR | *GUIDING AXLE-(TREE)* | STAR 8 (22J)_STAR 10 (26J) | 21 |
| 33 | ESSIEU MOTEUR | *DRIVING AXLE-(TREE)* | STAR 8 (22J)_STAR 10 (26J) | 29 |
| 37 | ENSEMBLE CONTREPOIDS | *COUNTERWEIGHT ASSEMBLY* | STAR 8 (22J)_STAR 10 (26J) | 35 |
| **B** | **TOURELLE** | ***TURRET*** | | **37** |
| 12 | ENSEMBLE CAPOTAGE | *COVER UNIT* | STAR 8 (22J)_STAR 10 (26J) | 39 |
| 15 | ENSEMBLE HYDRAULIQUE | *HYDRAULIC SECTION* | STAR 8 (22J)_STAR 10 (26J) | 43 |
| 19 | ENSEMBLE BATTERIE | *BATTERY UNIT* | STAR 8 (22J)_STAR 10 (26J) | 61 |
| 21 | ENSEMBLE ELECTRICITE | *ELECTRICITY ASSEMBLY* | STAR 8 (22J)_STAR 10 (26J) | 63 |
| 23 | ENSEMBLE CONTREPOIDS | *COUNTERWEIGHT ASSEMBLY* | STAR 8 (22J)_STAR 10 (26J) | 71 |
| **C** | **MAT TELESCOPIQUE** | ***TELESCOPIC MAST*** | | **73** |
| 26A | MAT TELESCOPIQUE 8 METRES | *TELESCOPIC MAST 8 METERS* | STAR 8 (22J) | 75 |
| 26B | MAT TELESCOPIQUE 10 METRES | *TELESCOPIC MAST 10 METERS* | STAR 10 (26J) | 95 |
| **D** | **NACELLE + PENDULAIRE** | ***PLATFORM + JIB*** | | **119** |
| 13 | ENSEMBLE NACELLE | *GANTRY ASSEMBLY* | STAR 8 (22J)_STAR 10 (26J) | 121 |
| 21 | ENSEMBLE ELECTRICITE | *ELECTRICITY ASSEMBLY* | STAR 8 (22J)_STAR 10 (26J) | 123 |
| 30 | ENSEMBLE PENDULAIRE | *JIB ASSEMBLY* | STAR 8 (22J)_STAR 10 (26J) | 129 |
| **E** | **FAISCEAU** | ***BUNDLE*** | | **133** |
| 10 | ENSEMBLE FAISCEAUX | *BUNDLES* | STAR 8 (22J)_STAR 10 (26J) | 134 |
| **F** | **ETIQUETTES** | ***LABELS*** | | **139** |
| 9 | ETIQUETTES COMMUNES | *COMMON LABELS* | STAR 8 (22J)_STAR 10 (26J) | 141 |
| 10 | ETIQUETTES FRANCE | *FRANCE LABELS* | STAR 8 (22J)_STAR 10 (26J) | 144 |
| 11 | ETIQUETTES GB | *GB LABELS* | STAR 8 (22J)_STAR 10 (26J) | 145 |
| 12 | ETIQUETTES ALLEMAGNE | *RFA LABELS* | STAR 8 (22J)_STAR 10 (26J) | 146 |
| 13 | ETIQUETTES ESPAGNE | *SPAIN LABELS* | STAR 8 (22J)_STAR 10 (26J) | 147 |
| 14 | ETIQUETTES ITALIE | *ITALY LABELS* | STAR 8 (22J)_STAR 10 (26J) | 148 |
| 15 | ETIQUETTES HOLLANDE | *HOLLAND LABELS* | STAR 8 (22J)_STAR 10 (26J) | 149 |
| 16 | ETIQUETTES AUSTRALIE | *AUSTRALIA LABELS* | STAR 8 (22J)_STAR 10 (26J) | 150 |
| 17 | ETIQUETTES DANEMARK | *DENMARK LABELS* | STAR 8 (22J)_STAR 10 (26J) | 151 |
| 18 | ETIQUETTES FINLANDE | *FINLAND LABELS* | STAR 8 (22J)_STAR 10 (26J) | 152 |
| 19 | ETIQUETTES PORTUGAL | *PORTUGAL LABELS* | STAR 8 (22J)_STAR 10 (26J) | 153 |
| 20 | ETIQUETTES SUÈDE | *SWEDEN LABELS* | STAR 8 (22J)_STAR 10 (26J) | 154 |
| **G** | **OPTIONS** | ***OPTIONS*** | | **157** |
| 1 | OPTION BATTERIE TRACTION | *TRACTION BATTERY OPTION* | | 159 |
| 2 | OPTION ANNEAUX D'ARRIMAGE | | | 161 |
| 3 | OPTION MOU DE CHAINES | | | 163 |
| 18 | OPTION AIR COMPRIMÉ | *COMPRESSED AIR OPTION* | | 165 |
| 46 | OPTION FEU A ÉCLATS | *FLASHING LIGHTS OPTION* | | 167 |
| 48 | OPTION REMPLIS. CENTRALI | | | 169 |
| 74 | OPTION TÉLÉ-CDE FREIN | | | 171 |
| 77 | OPTION BATTERIE GEL | *GEL BATTERY OPTION* | | 173 |
| 89 | OPTION DISJONT. DIFF. | *DIFFERENTIAL CIRCUIT BREAKER OPTION* | 220 V | 175 |
| 93 | OPTION CHARGEUR | *CHARGER OPTION* | 110 V | 177 |
| 95 | OPTION USA | *USA OPTION* | USA | 179 |
| 23A | OPTION ALIM EN NACELLE | *POWER SUPPLY LIFTING DEVICE OPTION* | 110 V USA | 181 |
| 23B | OPTION ALIM EN NACELLE | *POWER SUPPLY LIFTING DEVICE OPTION* | 115 V CE | 183 |
| 23C | OPTION ALIM EN NACELLE | *POWER SUPPLY LIFTING DEVICE OPTION* | 220 V DE | 185 |
| 23D | OPTION ALIM EN NACELLE | *POWER SUPPLY LIFTING DEVICE OPTION* | 220 V UK | 187 |
| 23E | OPTION ALIM EN NACELLE | *POWER SUPPLY LIFTING DEVICE OPTION* | 220 V AUS | 189 |
| 23F | OPTION ALIM EN NACELLE | *POWER SUPPLY LIFTING DEVICE OPTION* | 220 V CE | 191 |
| 23G | OPTION ALIM EN NACELLE | *POWER SUPPLY LIFTING DEVICE OPTION* | 220 V FR | 193 |
| 23H | OPTION ALIM EN NACELLE | *POWER SUPPLY LIFTING DEVICE OPTION* | 220 V SWI | 195 |
| 95A | OPTION SANS PESAGE | *OPTION WITHOUT WEITHING* | USA | 197 |
| 100 | OPTION RUSSE ET UKRAINE | *OPTION RUSSIA AND UKRAINE* | | 199 |

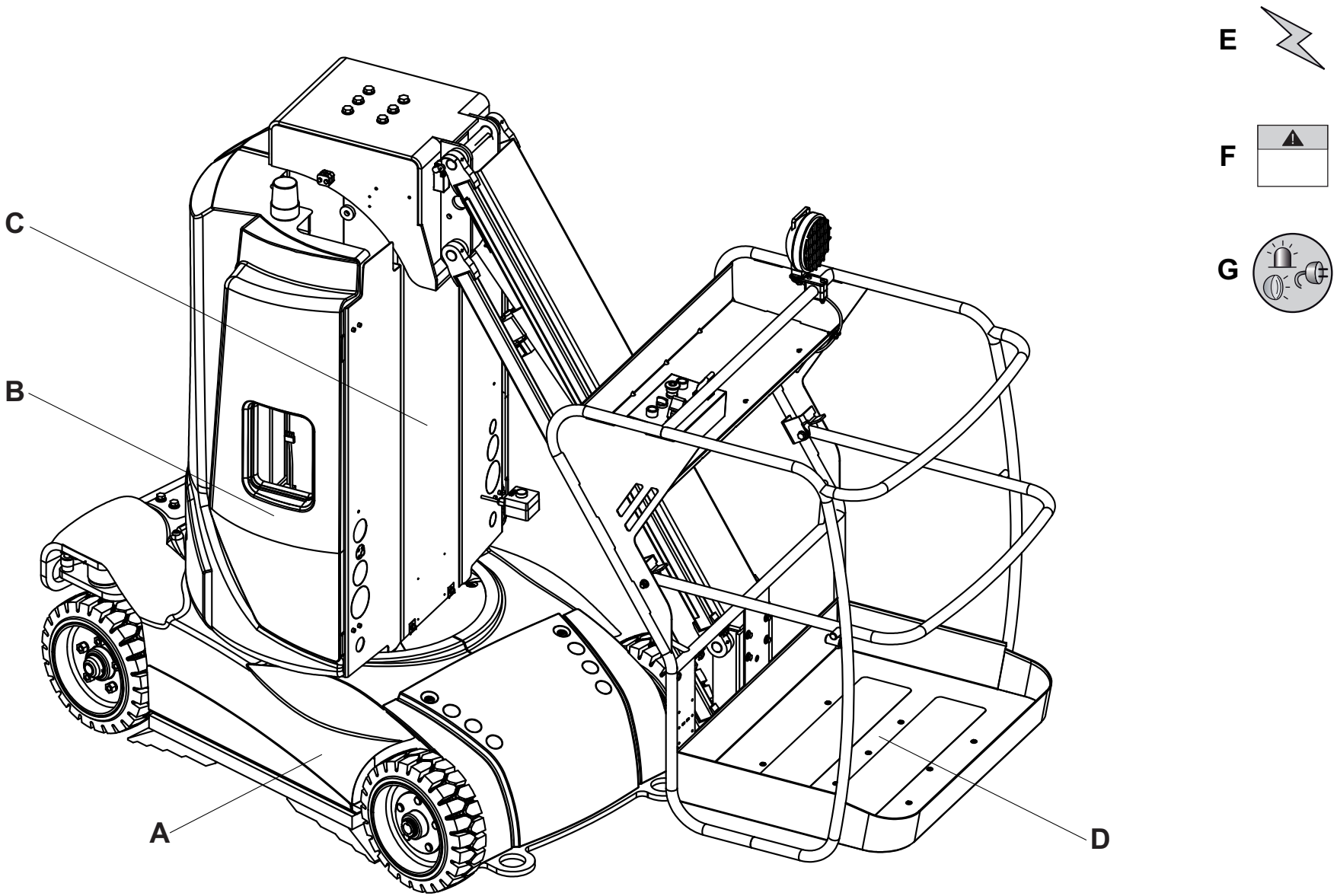


155

# ▲ Groupes Machine / Machine groups

## STAR 8 (STAR 22J) - STAR 10 (STAR 26J)

| Rep. | Désignation | Designation |
|---|---|---|
| A | PARTIE BASSE | BOTTOM PART |
| B | TOURELLE | TURRET |
| C | MÂT TÉLESCOPIQUE | TELESCOPIC MAST |
| D | NACELLE + PENDULAIRE | PLATFORM + JIB |
| E | ETIQUETTES | LABELS |
| F | FAISCEAU | BUNDLE |
| G | OPTIONS | OPTIONS |

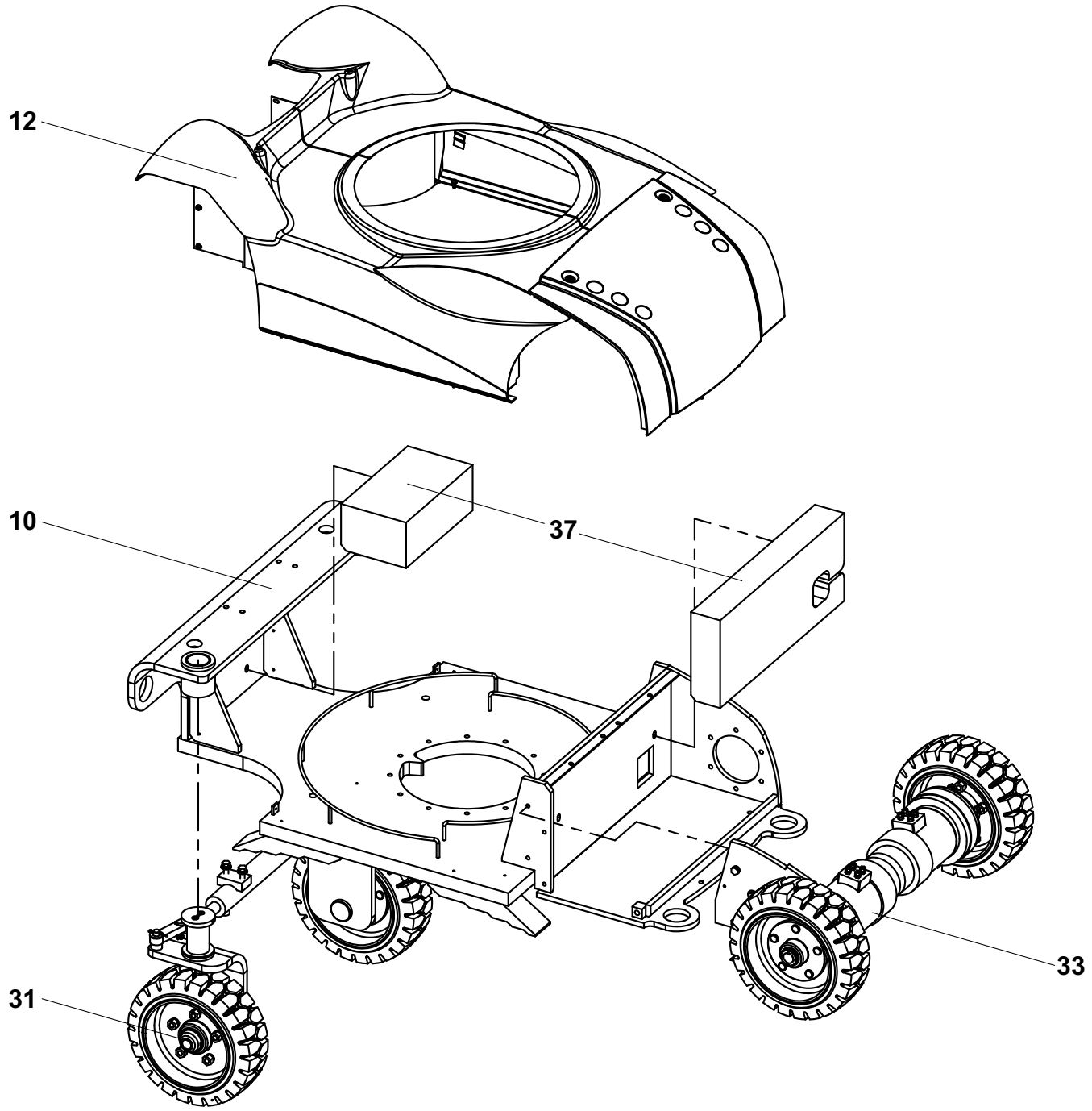


155-1

# ▲ PARTIE BASSE
# BOTTOM PART

◀ A ▶

| Rep. | Désignation | Designation | Specification | Up to / jusqu'à |
|---|---|---|---|---|
| **10** | **ENSEMBLE CHÂSSIS** | **CHASSIS ASSEMBLY** | **STAR 8 (22J) - STAR 10 (26J)** | |
| **12** | **ENSEMBLE CAPOTAGE** | **COVER UNIT** | **STAR 8 (22J) - STAR 10 (26J)** | |
| **31** | **ESSIEU DIRECTEUR** | **GUIDING AXLE-(TREE)** | **STAR 8 (22J) - STAR 10 (26J)** | |
| **33** | **ESSIEU MOTEUR** | **DRIVING AXLE-(TREE)** | **STAR 8 (22J) - STAR 10 (26J)** | |
| **37** | **ENSEMBLE CONTREPOIDS** | **COUNTERWEIGHT ASSEMBLY** | **STAR 8 (22J) - STAR 10 (26J)** | |

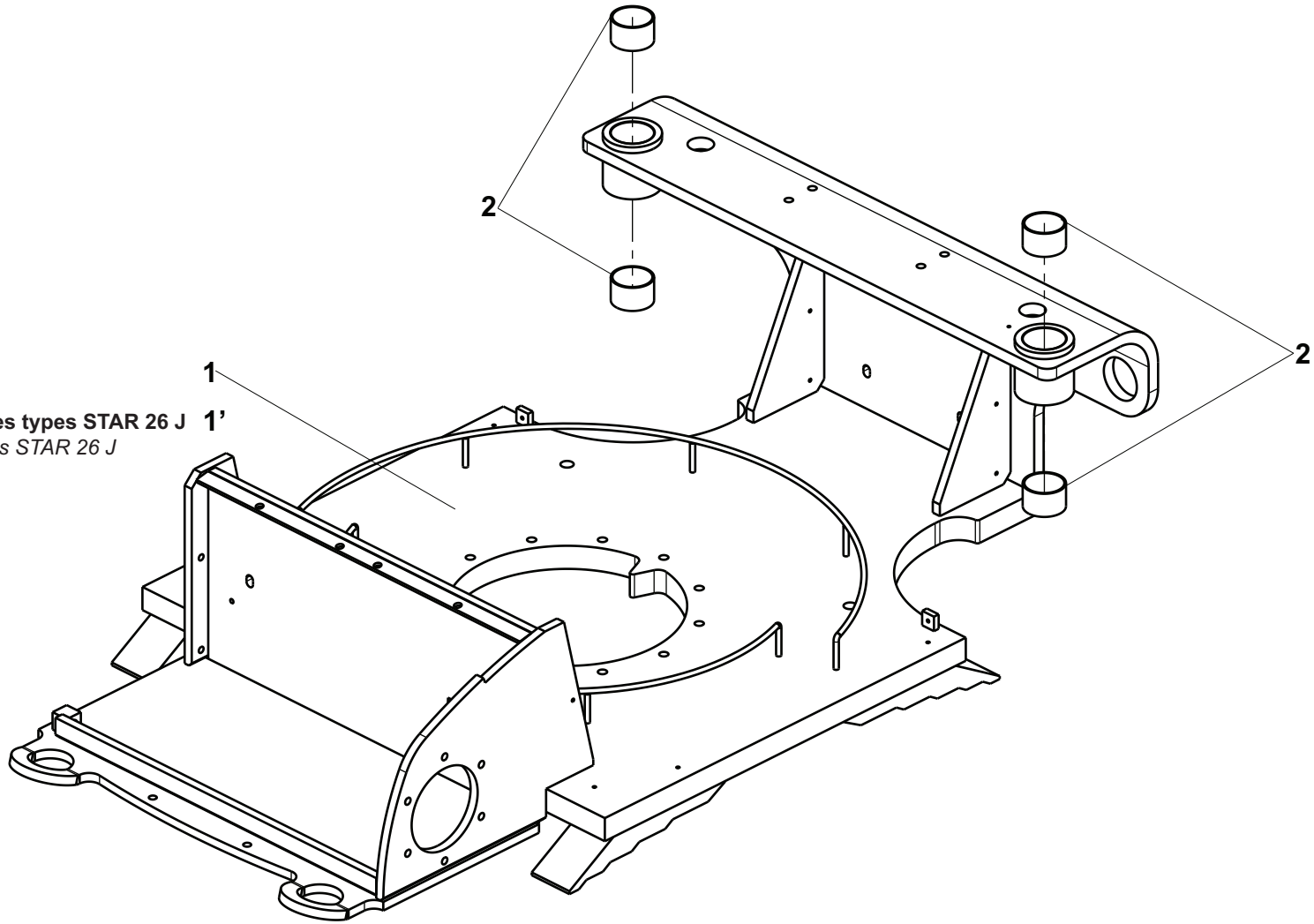


**Uniquement sur machines types STAR 26 J** **1'**
*Only on standard machines STAR 26 J*

155P235720.E

# ▲ ENSEMBLE CHÂSSIS - STAR 8 (22J) - STAR 10 (26J)
# CHASSIS ASSEMBLY - STAR 8 (22J) - STAR 10 (26J)



| Rep. | Désignation | Designation | Specification | Qty | Code | Up to / jusqu'à |
|---|---|---|---|---|---|---|
| 1 | CHÂSSIS | CHASSIS | | 1 | 155P235730 | **STAR 8 (22J) - STAR 10** |
| 1' | CHÂSSIS | CHASSIS | | 1 | 155P285160 | **STAR 26J** |
| 2 | BAGUE | RING | | 4 | 2390150660 | |

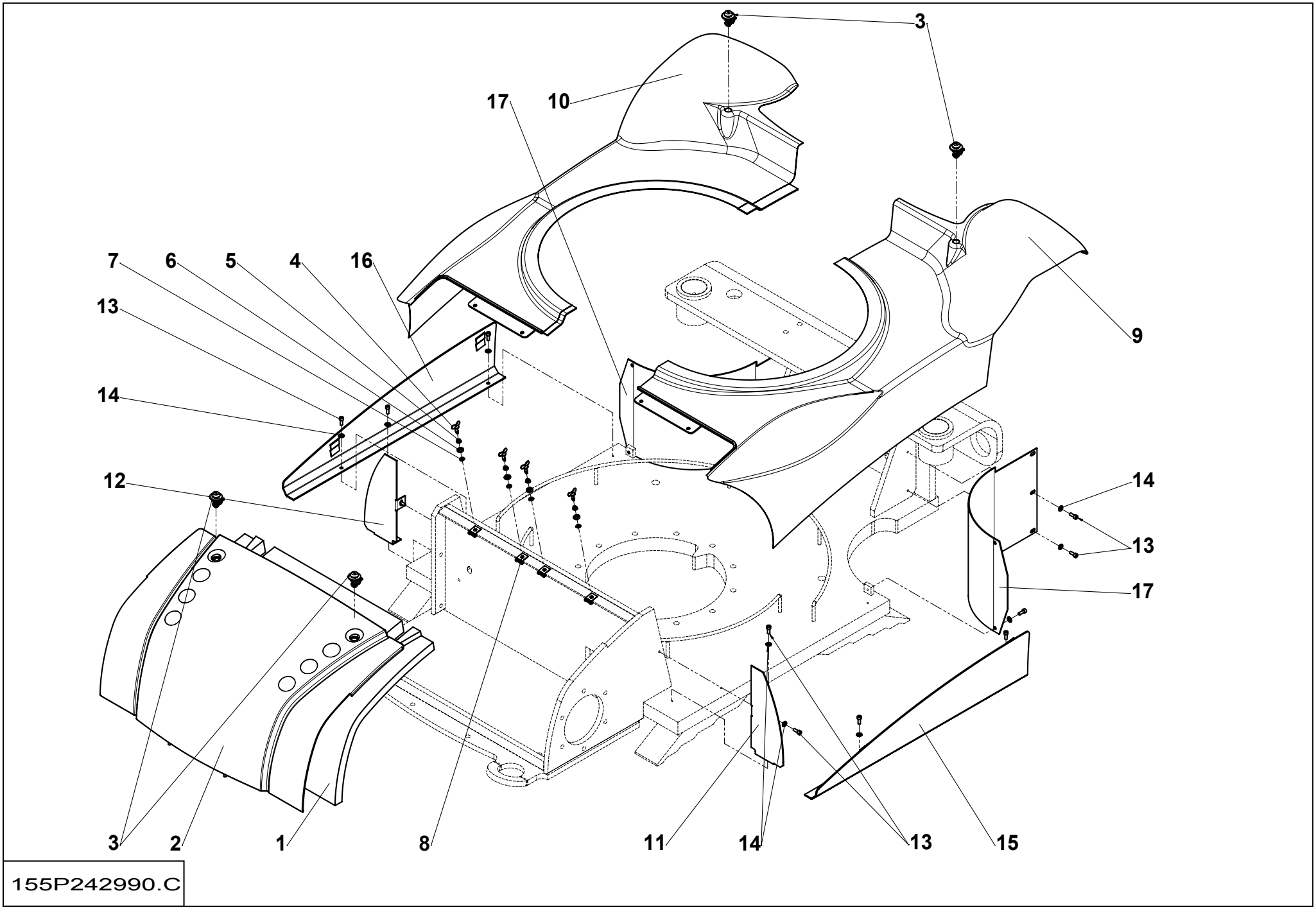
3
17
10
7
6
5
4
16
13
14
12
9
14
13
17
3
2
1
8
11
14
13
15
155P242990.C

# ENSEMBLE CAPOTAGE - STAR 8 (22J) - STAR 10 (26J)
# COVER UNIT - STAR 8 (22J) - STAR 10 (26J)



| Rep. | Désignation | Designation | Specification | Qty | Code | Up to / jusqu'à |
|---|---|---|---|---|---|---|
| 1 | MOUSSE | FOAM | | 1 | 154C165410 | |
| 2 | CAPOT CHÂSSIS | | | 1 | 154A146700 | |
| 3 | LOQUET À COMPRESSION | | E3-59-65 | 2 | 2421203410 | |
| 4 | GOUJON | STUD | | 4 | 2420703740 | |
| 5 | RESSORT | SPRING | | 4 | 2421808930 | |
| 6 | RONDELLE | WASHER | | 4 | 2421808950 | |
| 7 | RONDELLE DE RETENUE | RETAINER | | 4 | 2421808940 | |
| 8 | RÉCEPTACLE | RECEPTACLE | | 4 | 2421808920 | |
| 9 | CAPOT CHÂSSIS | | | 1 | 154P246920 | |
| 10 | CAPOT CHÂSSIS | | | 1 | 154P246930 | |
| 11 | TÔLE FERMETURE | IRON SHEET OF CLOSURE | | 1 | 154C163400 | |
| 12 | TÔLE FERMETURE | IRON SHEET OF CLOSURE | | 1 | 154C163390 | |
| 13 | VIS | SCREW | CHC M6X16-16 CL.8.8 ZB | 14 | 2308231480 | |
| 14 | RONDELLE CONIQUE STRIÉE | RIDGED CONICAL DISC | M 6 ZB | 14 | 2351902840 | |
| 15 | CAPOT TÔLE DROIT | | | 1 | 154B163760 | |
| 16 | CAPOT TÔLE GAUCHE | | | 1 | 154B163750 | |
| 17 | TÔLE | PLATE | | 2 | 154B163770 | |
| | | | | | | |
| | | | | | | |
| | | | | | | |
| | | | | | | |
| | | | | | | |
| | | | | | | |
| | | | | | | |
| | | | | | | |
| | | | | | | |

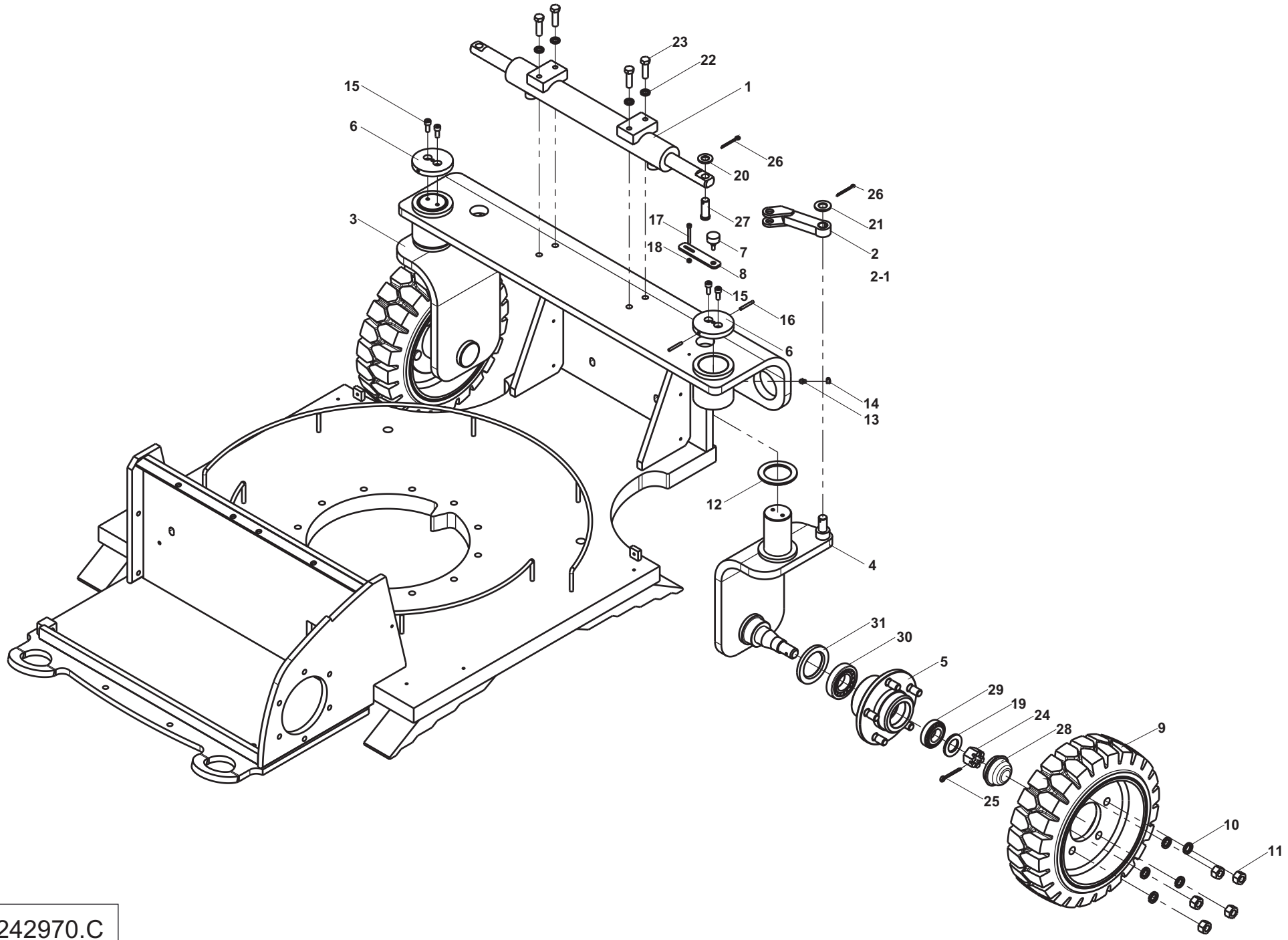


155P242970.C

# ESSIEU DIRECTEUR - STAR 8 (22J) - STAR 10 (26J)
# GUIDING AXLE-(TREE) - STAR 8 (22J) - STAR 10 (26J)



| Rep. | Désignation | Designation | Specification | Qty | Code | Up to / jusqu'à |
|---|---|---|---|---|---|---|
| **1** | **VÉRIN DE DIRECTION** | **STEERING CYLINDER** | | **1** | **154P333570** | **SEE DETAILS** |
| 2 | BIELLETTE DE DIRECTION | STEERING CONNECTING ROD | | 2 | 153B149570 | |
| *2-1* | *BAGUE* | *RING* | *MB 1820 DU* | *1* | *2390190280* | |
| 3 | SUPPORT | HOLDER | | 1 | 153B149490 | |
| 4 | SUPPORT | HOLDER | | 1 | 153B149470 | |
| 5 | MOYEU DE ROUE | WHEEL HUB | | 2 | 153C159170 | |
| 6 | PLAT | FLAT | | 2 | 154C161000 | |
| **7** | **FAISCEAU DU POTENTIOMETRE** | **POTENTIOMETER BUNDLE** | | **1** | **K154C1632** | **SEE DETAILS** |
| 8 | SUPPORT CAPTEUR | SENSOR SUPPORT | | 1 | 154C160990 | |
| 9 | ROUE | WHEEL | | 2 | 2601802160 | |
| 10 | RONDELLE ÉLASTIQUE | RUBBER WASHER | W 16 ZB | 10 | 2351201120 | |
| 11 | ECROU | NUT | H M16 P150 CL.10 ZB | 10 | 2346231050 | |
| 12 | RONDELLE DE BUTÉE | THRUST WASHER | LS 6085 | 2 | 2351130170 | |
| 13 | GRAISSEUR STANDARD DROIT | RIGHT-HAND STANDARD LUBRICA- | M8 X 125 | 2 | 2420701540 | |
| 14 | BOUCHON | PLUG | | 2 | 2420301180 | |
| 15 | VIS | SCREW | CHC M8X20-20 CL.8,8 ZB | 4 | 2308231690 | |
| 16 | VIS À BOUT PLAT | | HC M5-40-45H ZB | 2 | 2316132110 | |
| 17 | VIS | SCREW | CHC M5X45-45 CL.8,8 ZB | 1 | 2308233700 | |
| 18 | ECROU | NUT | H M5 CL. 8 ZB | 1 | 2341221040 | |
| 19 | RONDELLE PLATE | FLAT WASHER | Z 30 ZB | 2 | 2351111090 | |
| 20 | RONDELLE PLATE | FLAT WASHER | M 16 ZB | 2 | 2351112130 | |
| 21 | RONDELLE PLATE | FLAT WASHER | M 18 ZB | 2 | 2351112140 | |
| 22 | RONDELLE ÉLASTIQUE | RUBBER WASHER | W 12 ZB | 4 | 2351201100 | |
| 23 | VIS | SCREW | H M12X40-30 CL8.8 ZB | 4 | 2301231940 | |
| 24 | ECROU CRÉNELÉ | | HK M24 PAS 150 CL. 8 ZB | 2 | 2349222220 | |
| 25 | GOUPILLE FENDUE | SPLIT PIN | V 5X50 ZB | 2 | 2352101250 | |

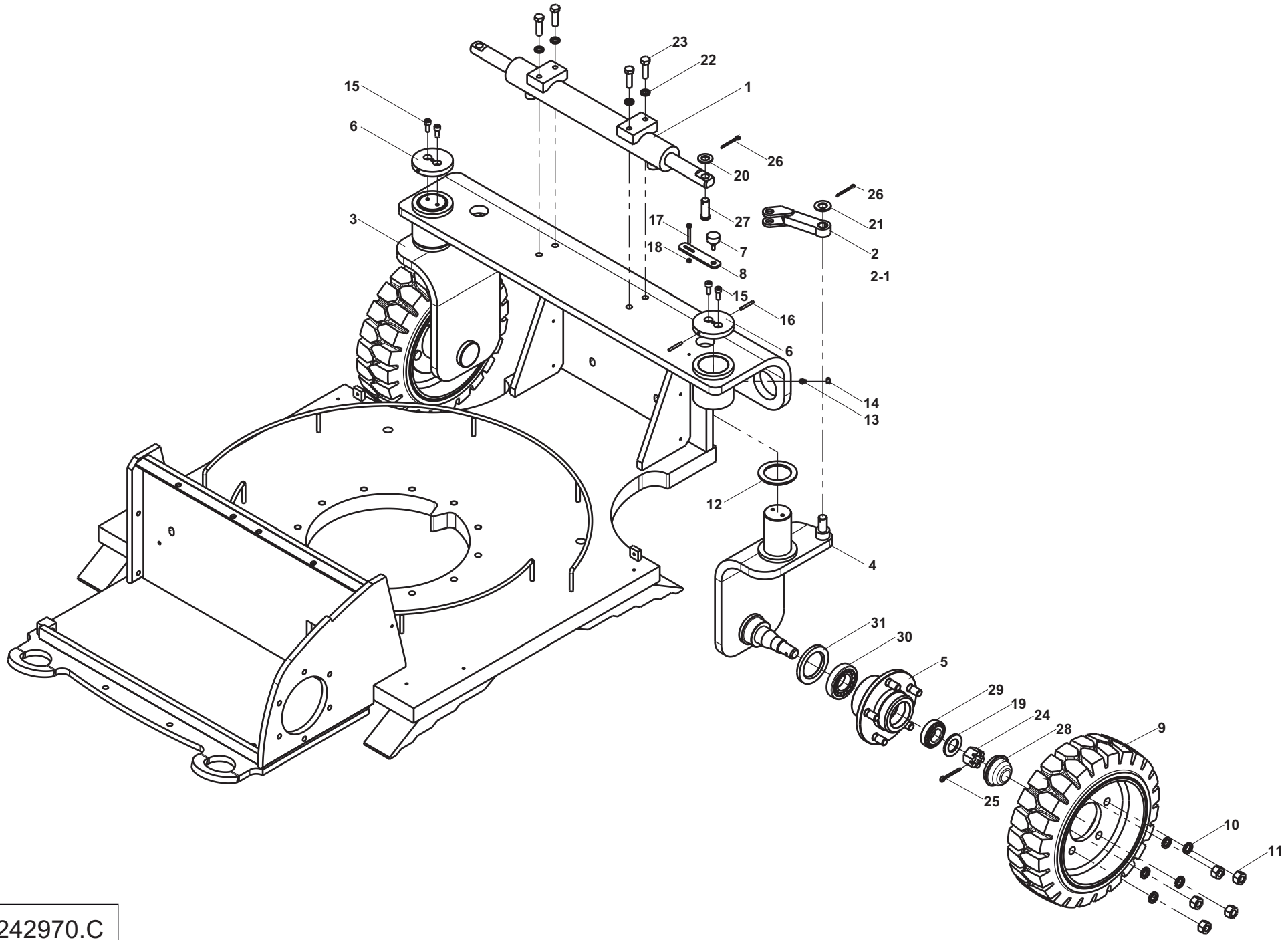


155P242970.C

# ESSIEU DIRECTEUR - STAR 8 (22J) - STAR 10 (26J)
# GUIDING AXLE-(TREE) - STAR 8 (22J) - STAR 10 (26J)



| Rep. | Désignation | Designation | Specification | Qty | Code | Up to / jusqu'à |
|---|---|---|---|---|---|---|
| 26 | GOUPILLE FENDUE | SPLIT PIN | | 4 | 2352101210 | |
| 27 | AXE À TÊTE | | | 2 | 2425041120 | |
| 28 | BOUCHON DE MOYEU | HUB PLUG | | 2 | 2420311640 | |
| 29 | ROULEMENT CONIQUE | CONE SHAPED BEARING | | 2 | 2452150090 | |
| 30 | ROULEMENT CONIQUE | CONE SHAPED BEARING | | 2 | 2452311080 | |
| 31 | JOINT | SEAL | | 2 | 2397720560 | |

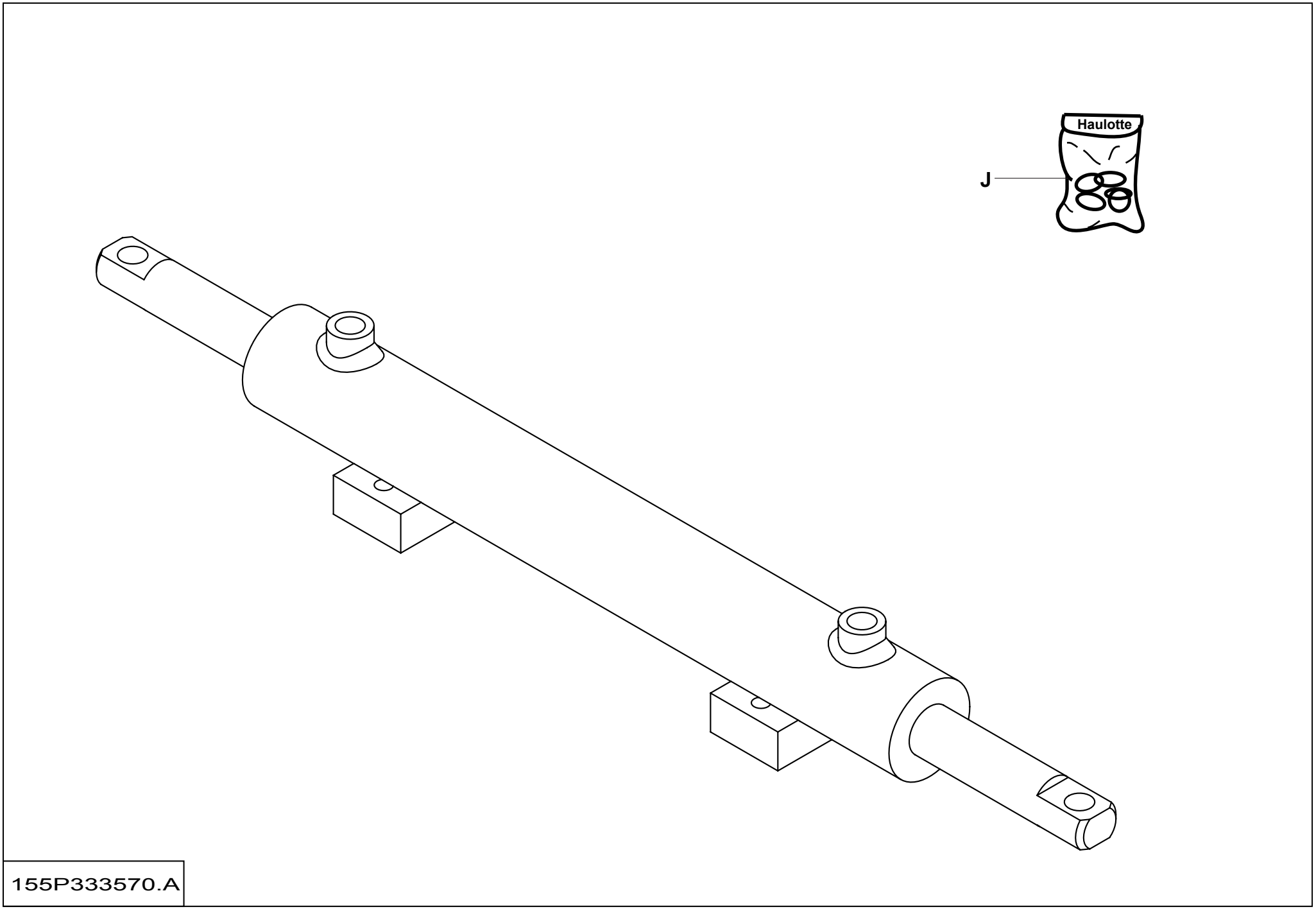
Haulotte
J
155P333570.A

## ▲ *VÉRIN DE DIRECTION*
## *STEERING CYLINDER*



| Rep. | Désignation | Designation | Specification | Qty | Code | Up to / jusqu'à |
|---|---|---|---|---|---|---|
| *J* | *POCHETTE DE JOINTS* | *SEAL KIT* | | *1* | *2505007130* | |

## ▲ *FAISCEAU DE POTENTIOMETRE*
## *POTENTIOMETER BUNDLE*



| Rep. | Désignation | Designation | Specification | Qty | Code | Up to / jusqu'à |
|---|---|---|---|---|---|---|
| *1* | *CÂBLE* | | *1MM2* | *1* | *2440301550* | |
| *2* | *COSSE* | *LUG* | *Ø4* | *1* | *2440305570* | |
| *3* | *DOUILLE* | *SOCKET* | | *3* | *2440404030* | |
| *4* | *JOINT* | *SEAL* | *3 V* | *1* | *2441003230* | |
| *5* | *JOINT* | *SEAL* | *3 V* | *1* | *2441003240* | |
| | | | | | | |
| | | | | | | |
| | | | | | | |
| | | | | | | |
| | | | | | | |
| | | | | | | |
| | | | | | | |
| | | | | | | |
| | | | | | | |
| | | | | | | |
| | | | | | | |
| | | | | | | |
| | | | | | | |
| | | | | | | |
| | | | | | | |
| | | | | | | |
| | | | | | | |
| | | | | | | |
| | | | | | | |
| | | | | | | |
| | | | | | | |

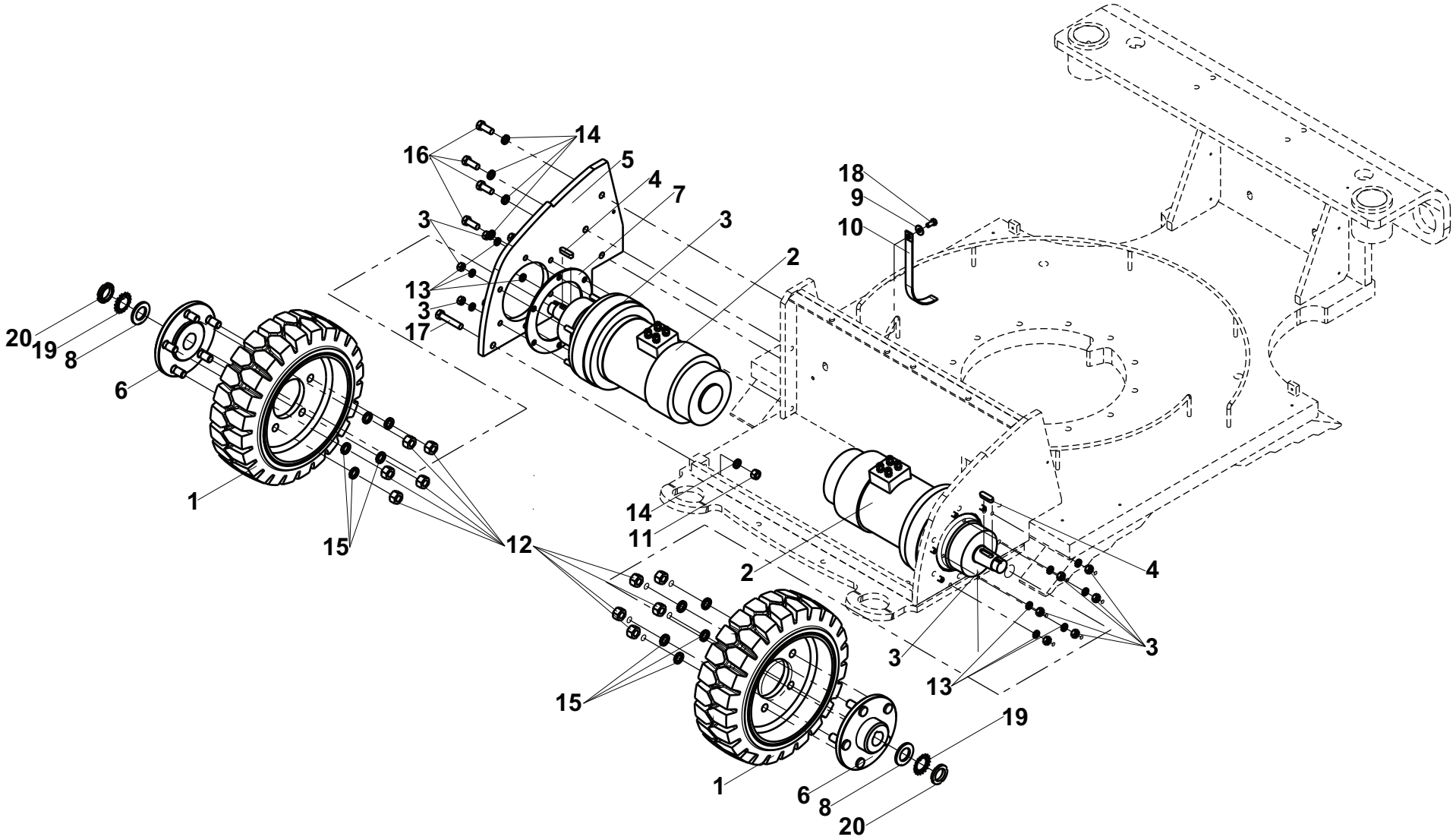


155P242980.B

# ▲ ESSIEU MOTEUR - STAR 8 (22J) - STAR 10 (26J)
# DRIVING AXLE-(TREE) - STAR 8 (22J) - STAR 10 (26J)



| Rep. | Désignation | Designation | Specification | Qty | Code | Up to / jusqu'à |
|---|---|---|---|---|---|---|
| 1 | ROUE | WHEEL | | 2 | 2601802160 | |
| **2** | **MOTEUR ÉLECTRIQUE** | **ELECTRIC MOTOR** | | **2** | **2431361010** | **SEE DETAILS** |
| **3** | **RÉDUCTEUR DE TRANSLATION** | **TRAVEL REDUCER** | | **2** | **2427102070** | **SEE DETAILS** |
| 4 | CLAVETTE PARALLÈLE | | 10 X 8 X 36 | 2 | 2700700010 | |
| 5 | TOLE SUPPORT | SHEET METAL SUPPORT | | 1 | 154B163790 | |
| 6 | MOYEU DE ROUE | WHEEL HUB | | 2 | 153C159160 | |
| 7 | ENTRETOISE | BRACE | | 2 | 154C165330 | |
| 8 | RONDELLE PLATE | FLAT WASHER | Z 30 ZB | 2 | 2351111090 | |
| 9 | RONDELLE PLATE | FLAT WASHER | L 8 ZB | 1 | 2351113070 | |
| 10 | TRESSE DE MASSE | BONDING JUMPER | | 1 | 2442004260 | |
| 11 | ECROU | NUT | H M12 CL. 8 ZB | 1 | 2341221090 | |
| 12 | ECROU | NUT | H M16 P150 CL.10 ZB | 10 | 2346231050 | |
| 13 | RONDELLE ÉLASTIQUE | RUBBER WASHER | W 10 ZB | 12 | 2351201090 | |
| 14 | RONDELLE ÉLASTIQUE | RUBBER WASHER | W 12 ZB | 5 | 2351201100 | |
| 15 | RONDELLE ÉLASTIQUE | RUBBER WASHER | W 16 ZB | 10 | 2351201120 | |
| 16 | VIS | SCREW | H M12X30-30 CL.8.8 ZB | 2 | 2331231740 | |
| 17 | VIS | SCREW | H M12X60-30 CL.8.8 ZB | 1 | 2301231980 | |
| 18 | VIS | SCREW | H M8X16-16 CL.8.8 ZB | 1 | 2331231400 | |
| 19 | RONDELLE | WASHER | MB 6 | 2 | 2454132060 | |
| 20 | ECROU | NUT | KM 6 | 2 | 2454131060 | |
| | | | | | | |
| | | | | | | |
| | | | | | | |
| | | | | | | |
| | | | | | | |
| | | | | | | |

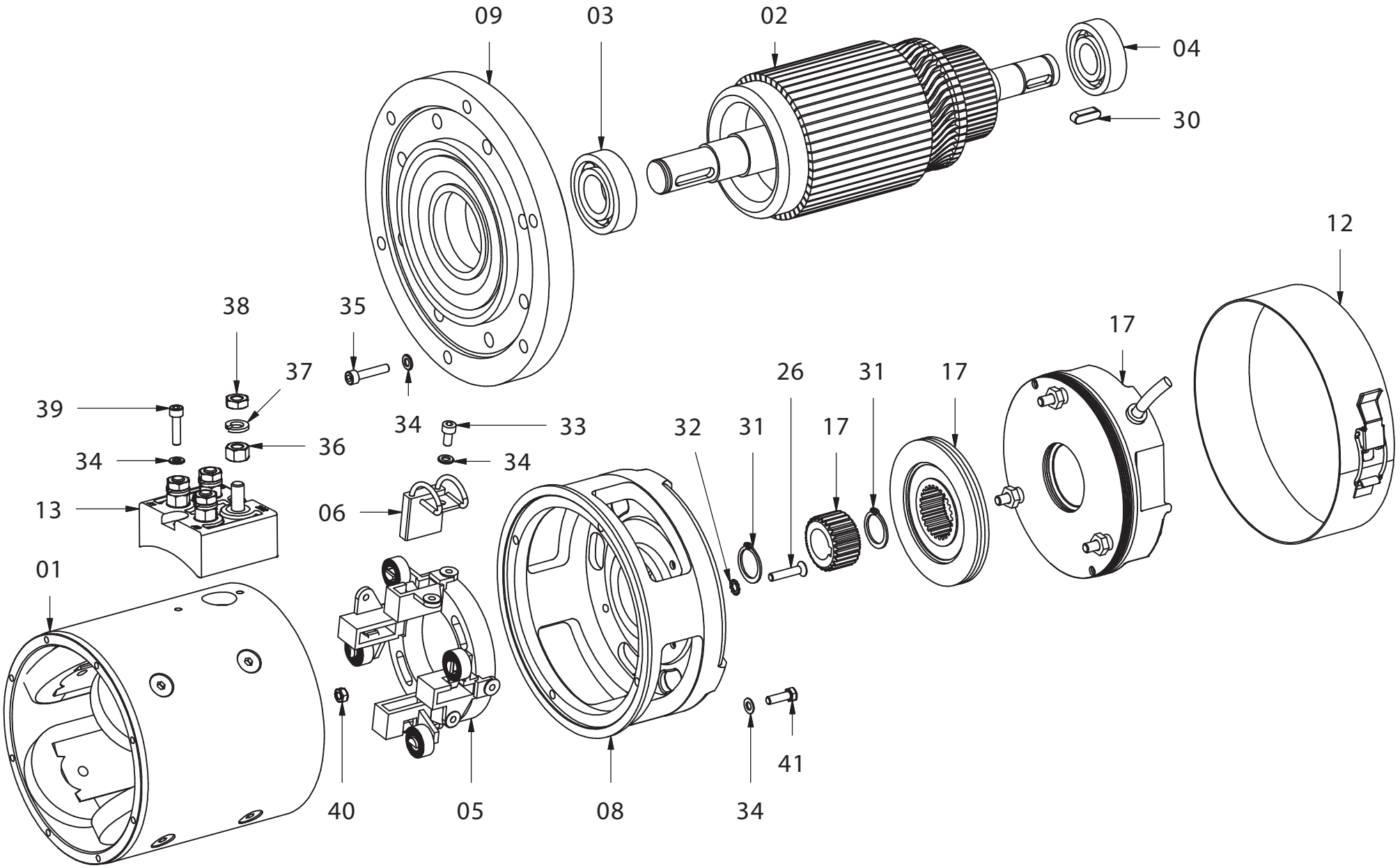


2431361010.A

## ▲ *MOTEUR ÉLECTRIQUE*
## *ELECTRIC MOTOR*



| Rep. | Désignation | Designation | Specification | Qty | Code | Up to / jusqu'à |
|---|---|---|---|---|---|---|
| 1 | CORPS | BLOCK | | 1 | 2901005910 | |
| 2 | ROTOR ÉLECTRIQUE | | | 1 | 2901005900 | |
| 3 | ROULEMENT | BEARING | | 1 | 2326010990 | |
| 4 | ROULEMENT | BEARING | | 1 | 2326010910 | |
| 5 | SUPPORT | HOLDER | | 1 | 2326010970 | |
| 6 | CHARBON | COAL | | 1 | 2326010980 | |
| 8 | SUPPORT | HOLDER | | 1 | 2326010960 | |
| 9 | BRIDE | FLANGE | | 1 | 2326010950 | |
| 12 | COLLIER | COLLAR | | 1 | 2326010940 | |
| 13 | BORNIER | TERMINAL BLOCK | | 1 | 2901005890 | |
| 17 | FREIN ELECTROMAGNETIQUE | BRAKE | | 1 | 2901005880 | |
| 30 | CLAVETTE | KEY | | 1 | 2326011000 | |
| 31 | CIRCLIPS | CIRCLIPS | | 1 | 2326011010 | |
| 33 | VIS | SCREW | CHC M5X10-10 CL.8,8 ZB | 1 | 2308231290 | |
| 37 | RONDELLE ÉLASTIQUE | RUBBER WASHER | W 8 ZB | 1 | 2351201070 | |
| 38 | ECROU BAS | THIN NUT | HM M8 CL. 4 ZB | 1 | 2341222030 | |
| 38 | ECROU | NUT | H M8 CL. 8 ZB | 1 | 2341221070 | |
| 39 | VIS | SCREW | CHC M5X20-20 CL8.8 ZB | 1 | 2308231320 | |
| 40 | ECROU | NUT | H M5 CL. 8 ZB | 1 | 2341221040 | |
| | | | | | | |
| | | | | | | |
| | | | | | | |
| | | | | | | |
| | | | | | | |
| | | | | | | |
| | | | | | | |

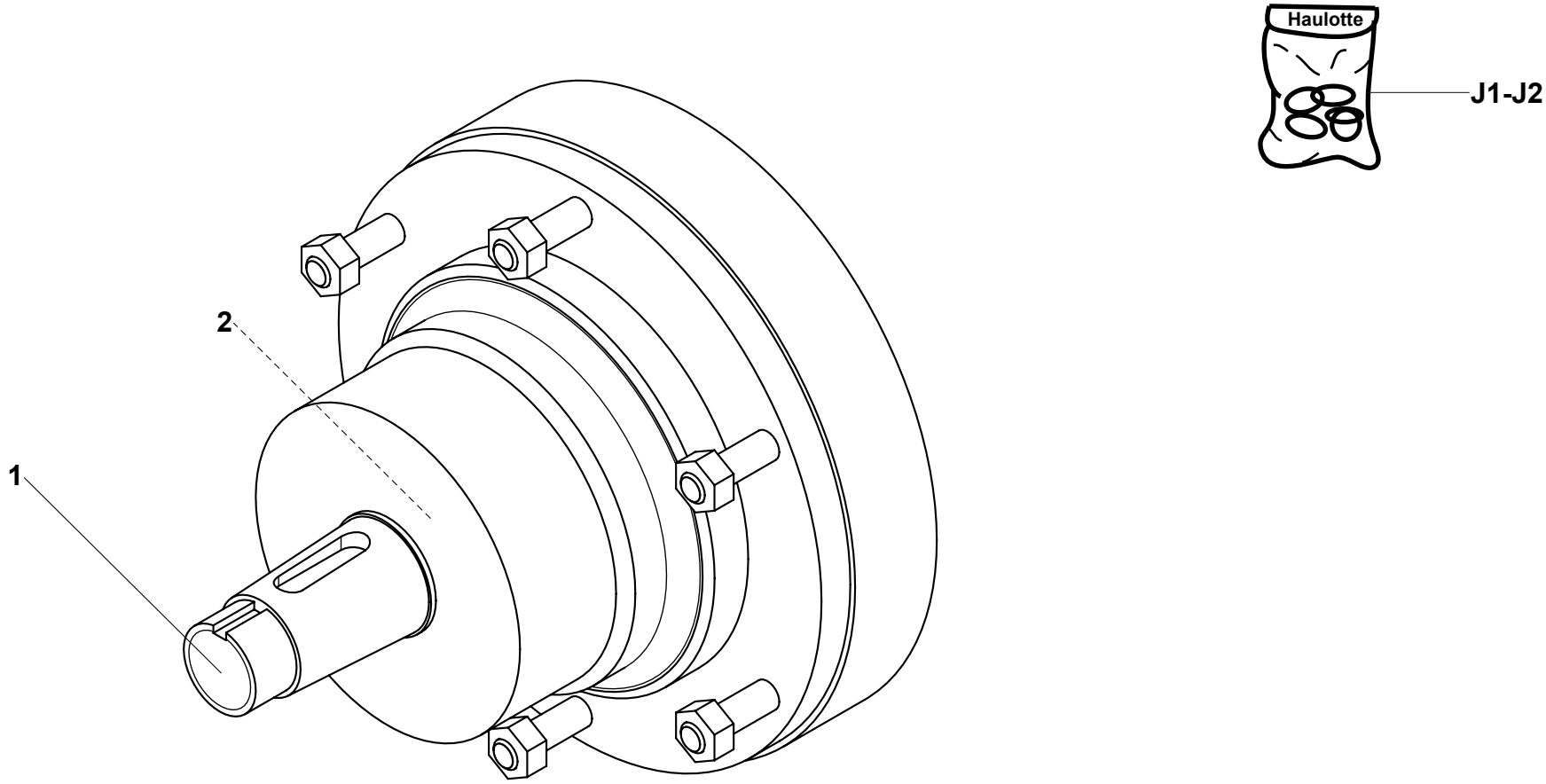


2427102070.A

# ▲ *RÉDUCTEUR DE TRANSLATION*
# *TRAVEL REDUCER*



| Rep. | Désignation | Designation | Specification | Qty | Code | Up to / jusqu'à |
|---|---|---|---|---|---|---|
| *1* | *ARBRE DE SORTIE* | *OUTPUT SHAFT* | | *1* | *2325001650* | |
| *2* | *ROULEMENT* | *BEARING* | | *1* | *2325003630* | |
| *J1* | *JOINT* | *SEAL* | | *1* | *2421003770* | |
| *J2* | *JOINT* | *SEAL* | *BABSL0,5 35X52X6* | *1* | *2505004240* | |

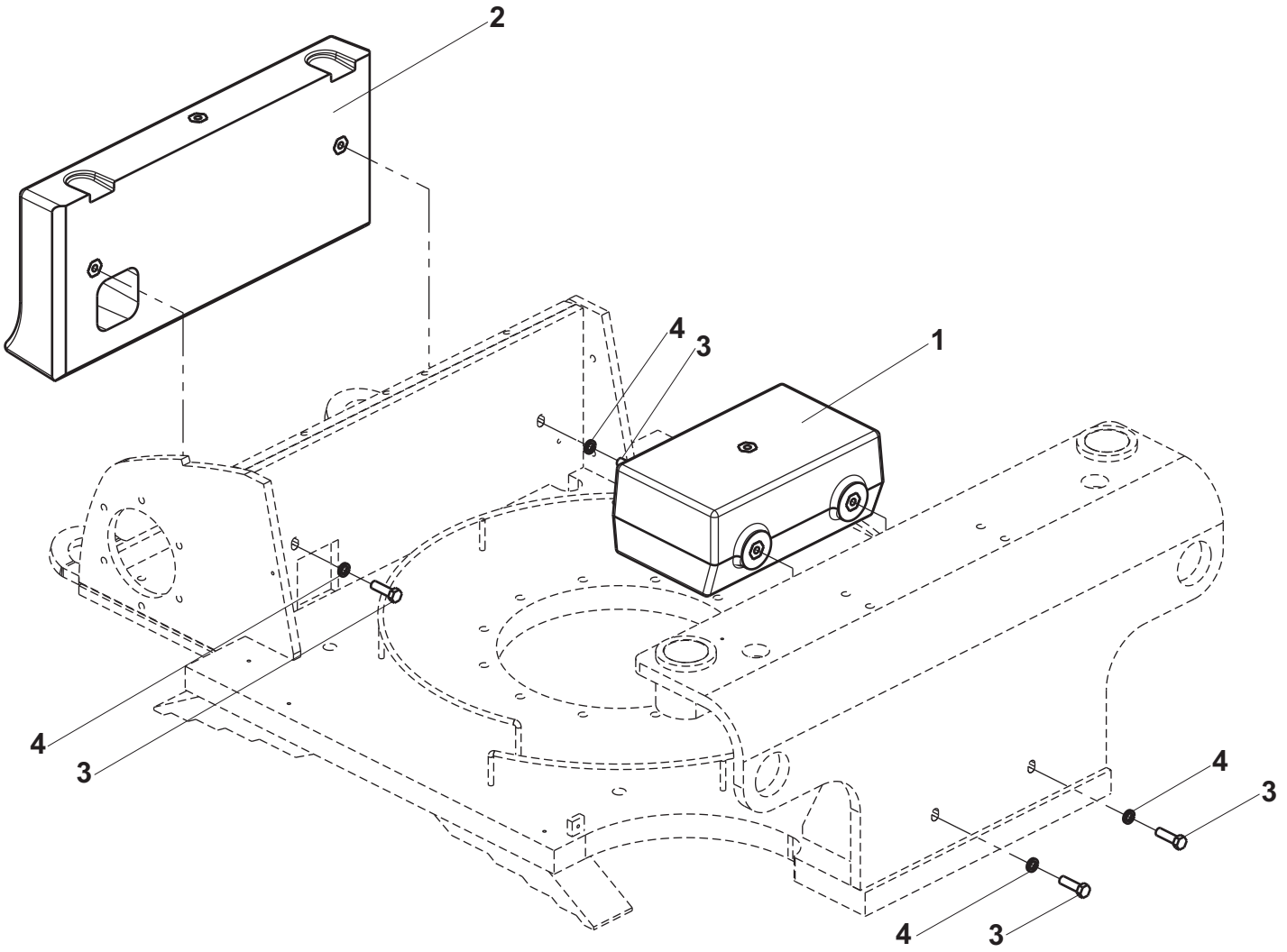


155P242960.H

# ▲ ENSEMBLE CONTREPOIDS - STAR 8 (22J) - STAR 10 (26J)
# COUNTERWEIGHT ASSEMBLY - STAR 8 (22J) - STAR 10 (26J)



| Rep. | Désignation | Designation | Specification | Qty | Code | Up to / jusqu'à |
|---|---|---|---|---|---|---|
| 1 | CONTREPOIDS MOULÉ | | | 1 | 155P241160 | |
| 2 | CONTREPOIDS MOULÉ | | | 1 | 155P241170 | |
| 3 | VIS | SCREW | H M12X40-30 CL8.8 ZB | 4 | 2301231940 | |
| 4 | RONDELLE ÉLASTIQUE | RUBBER WASHER | W 12 ZB | 4 | 2351201100 | |

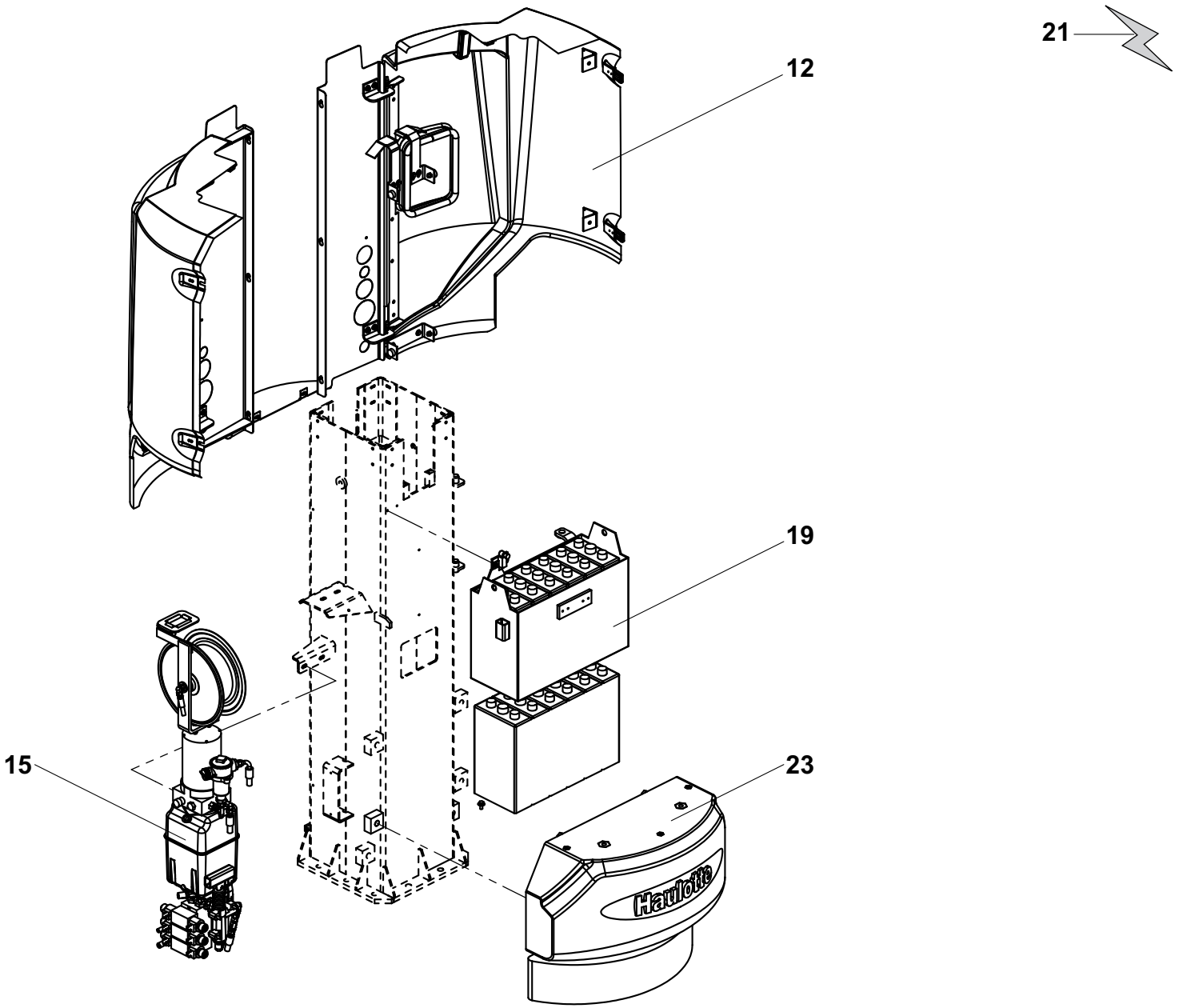


155-2

# ▲ TOURELLE
# TURRET

◀ B ▶

| Rep. | Désignation | Designation | Specification | Up to / jusqu'à |
|---|---|---|---|---|
| **12** | **ENSEMBLE CAPOTAGE** | **COVER UNIT** | **STAR 8 (22J) - STAR 10 (26J)** | |
| **15** | **ENSEMBLE HYDRAULIQUE** | **HYDRAULIC SECTION** | **STAR 8 (22J) - STAR 10 (26J)** | |
| **19** | **ENSEMBLE BATTERIE** | **BATTERY UNIT** | **STAR 8 (22J) - STAR 10 (26J)** | |
| **21** | **ENSEMBLE ÉLECTRICITÉ** | **ELECTRICITY ASSEMBLY** | **STAR 8 (22J) - STAR 10 (26J)** | |
| **23** | **ENSEMBLE CONTREPOIDS** | **COUNTERWEIGHT ASSEMBLY** | **STAR 8 (22J) - STAR 10 (26J)** | |

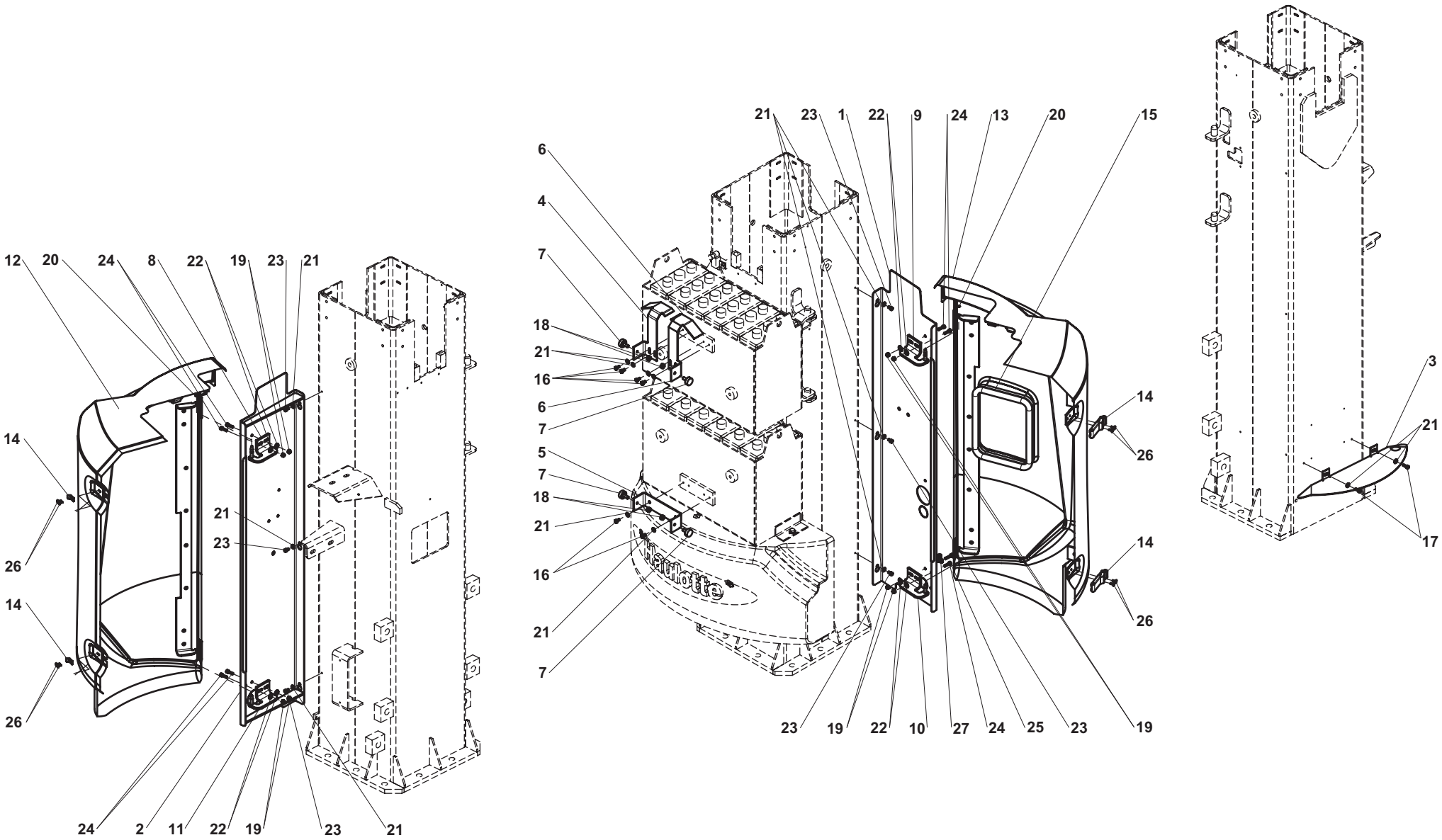


155P243010.B

# ENSEMBLE CAPOTAGE - STAR 8 (22J) - STAR 10 (STAR 26J)
# COVER UNIT - STAR 8 (22J) - STAR 10 (STAR 26J)



| Rep. | Désignation | Designation | Specification | Qty | Code | Up to / jusqu'à |
|---|---|---|---|---|---|---|
| 1 | TÔLE DE FERMETURE | CLOSING SHEET | | 1 | 155P233490 | |
| 2 | TÔLE DE FERMETURE | CLOSING SHEET | | 1 | 155P233480 | |
| 3 | TÔLE DE FERMETURE | CLOSING SHEET | | 1 | 155P233740 | |
| 4 | TÔLE | PLATE | | 1 | 154B164050 | |
| 5 | TÔLE | PLATE | | 1 | 154C163640 | |
| 6 | TÔLE | PLATE | | 1 | 154B164060 | |
| 7 | SILENTBLOC | SILENTBLOC | Ø 25,5 X 10 + 1 M8 X 20 | 4 | 2421603380 | |
| 8 | CHARNIÈRE | | | 1 | 154C163380 | |
| 9 | CHARNIÈRE | | | 1 | 154C163670 | |
| 10 | CHARNIÈRE | | | 1 | 154C163800 | |
| 11 | CHARNIÈRE | | | 1 | 154C163790 | |
| 12 | CAPOT DROIT | RIGHT HOOD | | 1 | 155P255700 | |
| 13 | CAPOT GAUCHE | LEFT HOOD | | 1 | 155P255710 | |
| 14 | GRENOUILLÈRE | DUNKING DEVICE | | 2 | 2420703750 | |
| 15 | PROFIL ARMATURE MÉTAL. | METAL FRAME PROFILE | | 0.9 | 2399003450 | |
| 16 | VIS | SCREW | H M6X12-12 CL.8.8 ZB | 6 | 2301235830 | |
| 17 | VIS | SCREW | CHC M6X16-16 CL.8.8 ZB | 2 | 2308231480 | |
| 18 | ECROU | NUT | H M8 CL. 8 ZB | 4 | 2341221070 | |
| 19 | ECROU AUTOFREINÉ | | H FR M6 CL. 8 ZB | 8 | 2349221490 | |
| 20 | ANNEAU ÉLASTIQUE ARBRE | | 8X0,8 DC | 2 | 2479001190 | |
| 21 | RONDELLE CONIQUE STRIÉE | RIDGED CONICAL DISC | M 6 ZB | 14 | 2351902840 | |
| 22 | RONDELLE PLATE | FLAT WASHER | L 6 ZB | 8 | 2351123050 | |
| 23 | VIS | SCREW | CHC M6X10-10 CL.8,8 ZB | 6 | 2308231460 | |
| 24 | VIS | SCREW | CHC M6X20-20 CL.8,8 ZB | 7 | 2308231490 | |
| 25 | VIS | SCREW | CHC M6X25-25 CL.8,8 ZB | 1 | 2308231500 | |
| 26 | RIVET AVEUGLE TÊTE BOMBÉ | | TAPD 510 BSLF | 8 | 2421808290 | |

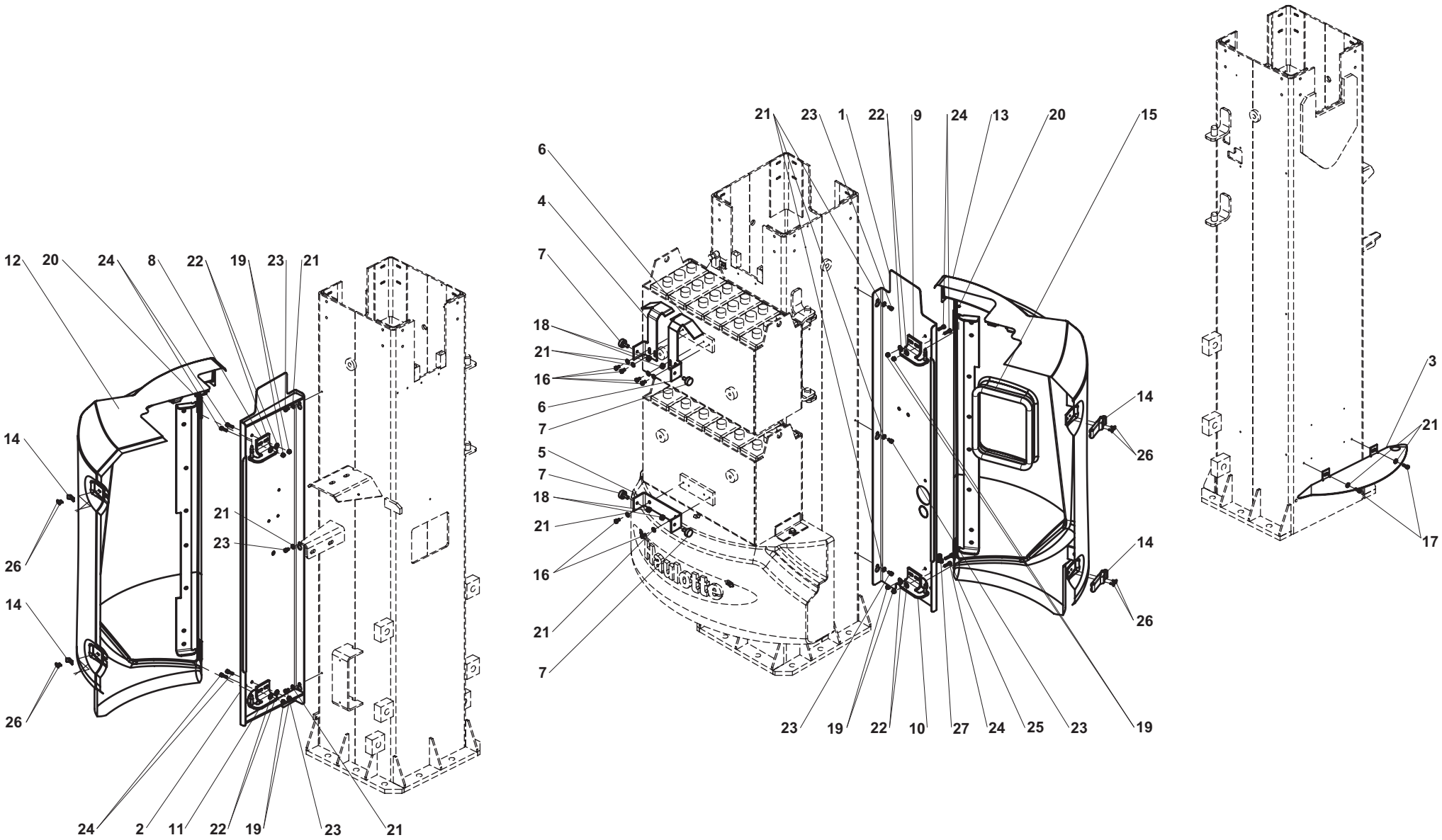


155P243010.B

# ENSEMBLE CAPOTAGE - STAR 8 (22J) - STAR 10 (STAR 26J)
# COVER UNIT - STAR 8 (22J) - STAR 10 (STAR 26J)



| Rep. | Désignation | Designation | Specification | Qty | Code | Up to / jusqu'à |
|---|---|---|---|---|---|---|
| 27 | COLLIER DE FIXATION | CABLE CLIP | Ø6 X 15 | 1 | 2389001500 | |

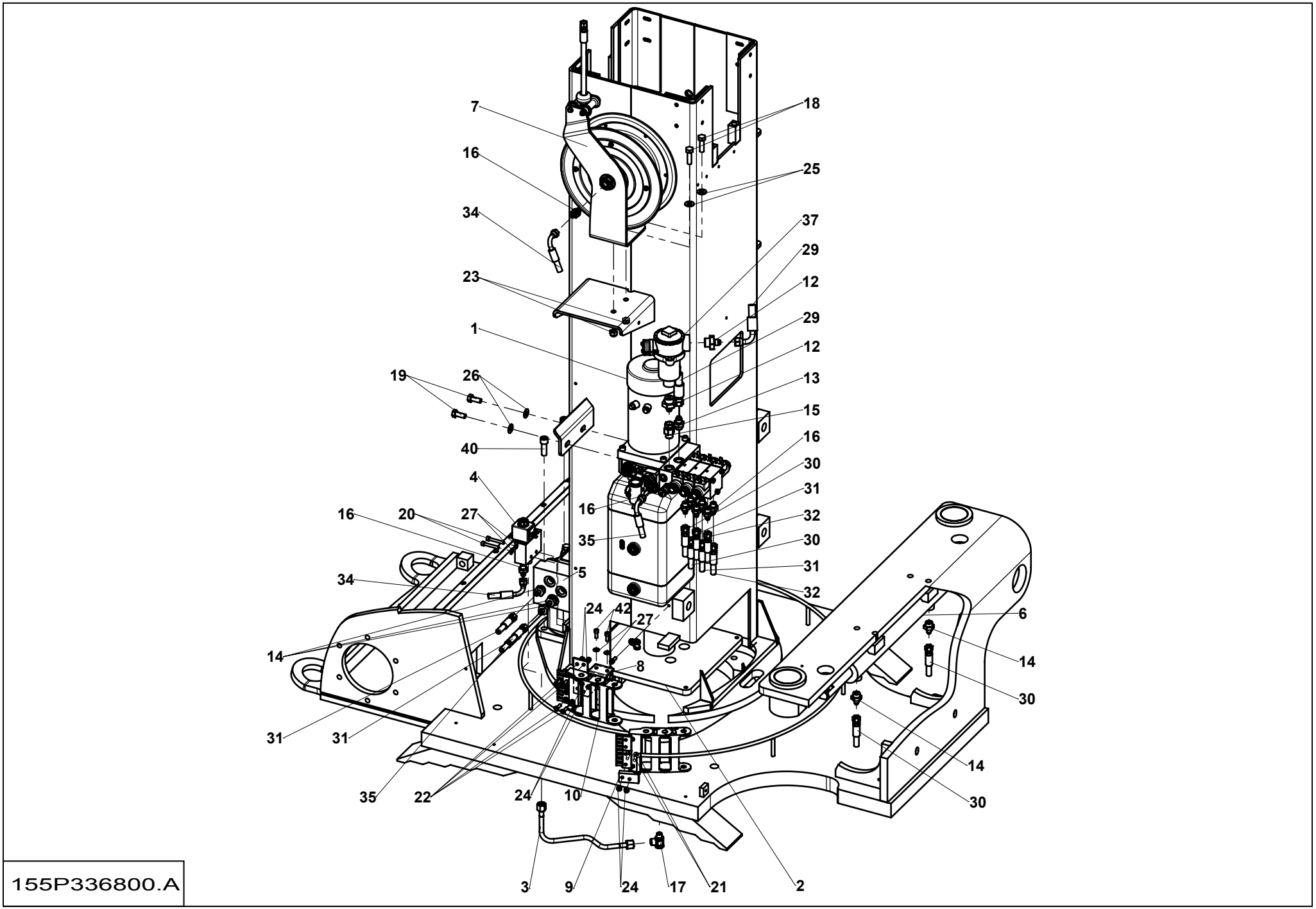


155P336800.A

# ENSEMBLE HYDRAULIQUE - STAR 8 (22J) - STAR 10 (STAR 26J)
# HYDRAULIC SECTION - STAR 8 (22J) - STAR 10 (STAR 26J)



| Rep. | Désignation | Designation | Specification | Qty | Code | Up to / jusqu'à |
|---|---|---|---|---|---|---|
| 1 | CENTRALE HYDRAULIQUE | CENTRAL HYDRAULIC PLANT | | 1 | 2505002140 | **SEE DETAILS** |
| 2 | VÉRIN DE LEVAGE | LIFTING CYLINDER | | 1 | 155P254560 | **SEE DETAILS** |
| 3 | TUBE HYDRAULIQUE | HYDRAULIC TUBE | | 1 | 155P235710 | |
| 4 | BLOC DESC. SECOURS | EMERGENCY LOWERING BLOCK | | 1 | 155P246690 | **SEE DETAILS** |
| 5 | ENS. MOTEUR ORIENTATION | | | 1 | 2431203430 | **SEE DETAILS** |
| 6 | VÉRIN DE DIRECTION | STEERING CYLINDER | | 1 | 154P200140 | **SEE DETAILS** |
| 7 | ENROULEUR | WINDER | | 1 | 2505000730 | |
| 8 | SUPPORT | HOLDER | | 1 | 155P244810 | |
| 9 | SUPPORT | HOLDER | | 1 | 155P245160 | |
| 10 | CHAINE DE GUIDAGE | | | 1 | 2326005500 | |
| 12 | UNION MALE | MALE UNION | | 2 | 2369117370 | |
| 13 | UNION MALE | MALE UNION | | 1 | 2369117360 | |
| 14 | UNION MALE | MALE UNION | | 5 | 2369117000 | |
| 15 | ENSEMBLE HYDRAULIQUE | HYDRAULIC SECTION | | 1 | 2369164070 | |
| 16 | UNION MALE | MALE UNION | | 9 | 2369117120 | |
| 17 | RACCORD | FITTING | | 1 | 2501000980 | |
| 18 | VIS H | | | 2 | 2301231770 | |
| 19 | VIS H | | | 2 | 2331231560 | |
| 20 | VIS CHC | | | 2 | 2308231530 | |
| 21 | VIS FHC | | | 2 | 2307331520 | |
| 22 | VIS FHC | | | 4 | 2337331050 | |
| 23 | ECROU AUTOFREINE | SELF-LOCKED NUT | | 2 | 2349221510 | |
| 24 | ECROU AUTOFREINE | SELF-LOCKED NUT | | 6 | 2349221490 | |
| 25 | RONDELLE PLATE | FLAT WASHER | | 2 | 2351112090 | |
| 26 | RONDELLE CONIQUE STRIÉE | RIDGED CONICAL WASHER | | 2 | 2351902780 | |
| 27 | RONDELLE CONIQUE STRIÉE | RIDGED CONICAL WASHER | | 4 | 2351902840 | |

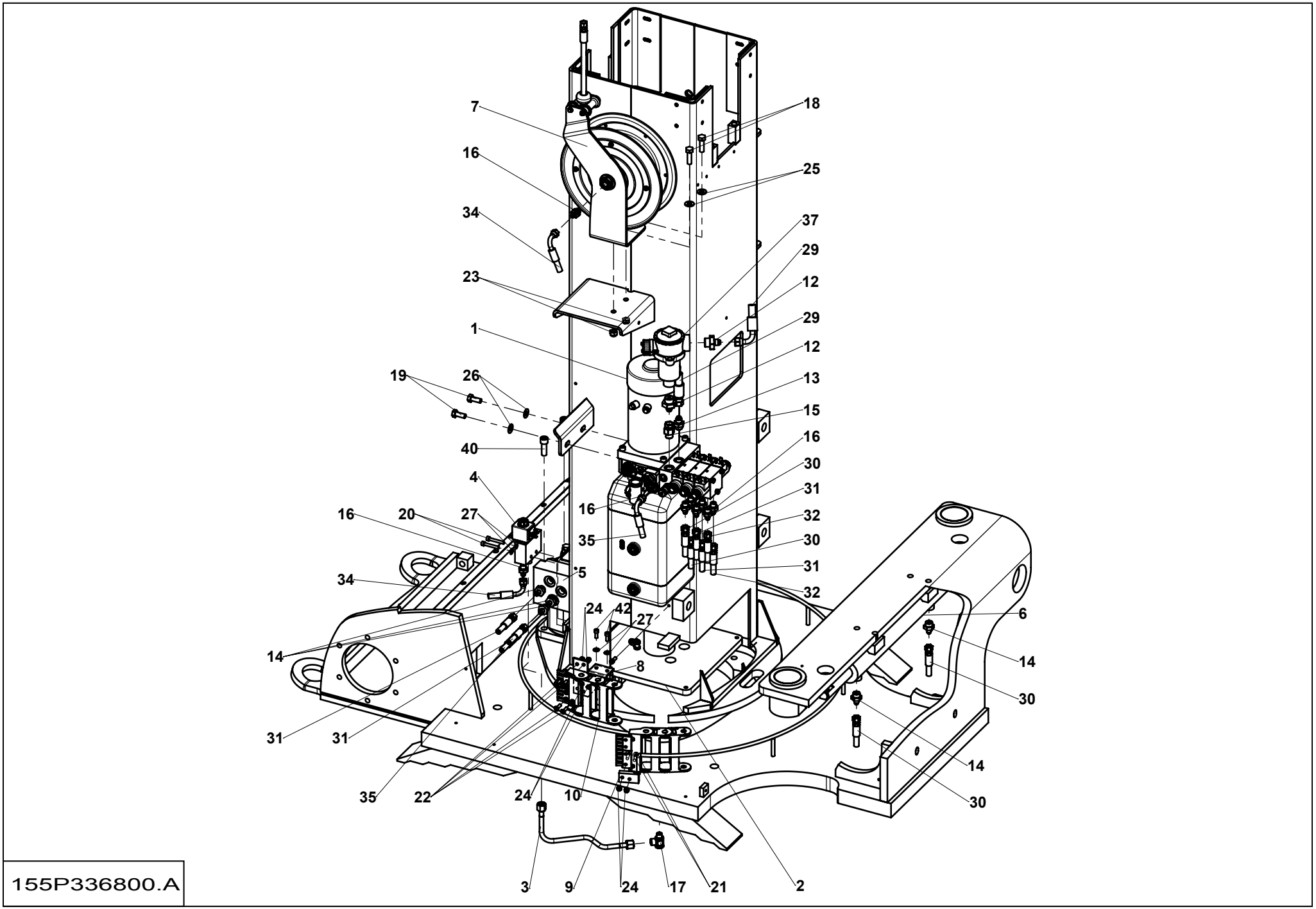
7
16
34
23
1
19
26
40
4
16
20
27
34
14
31
31
35
22
24
10
3
9
24
17
21
2
18
25
37
29
12
29
12
13
15
16
30
31
32
30
31
32
16
35
5
24
42
27
8
6
14
30
14
30
155P336800.A

# ENSEMBLE HYDRAULIQUE - STAR 8 (22J) - STAR 10 (STAR 26J)
# HYDRAULIC SECTION - STAR 8 (22J) - STAR 10 (STAR 26J)



| Rep. | Désignation | Designation | Specification | Qty | Code | Up to / jusqu'à |
|---|---|---|---|---|---|---|
| 28 | FLEXIBLE HYDRAULIQUE | | | 1 | 2369076510 | |
| 30 | FLEXIBLE HYDRAULIQUE | | | 1 | 2369059690 | |
| 31 | FLEXIBLE HYDRAULIQUE | | | 2 | 2369071370 | |
| 32 | FLEXIBLE HYDRAULIQUE | | | 2 | 2369071790 | |
| 34 | FLEXIBLE HYDRAULIQUE | | | 1 | 2369073770 | |
| 37 | FILTRE PRESSION | PRESSURE FILTER | | 1 | 2505000780 | **SEE DETAILS** |
| 40 | VIS CHC | | | 4 | 2308232120 | |
| 41 | COLLIER POLYAMIDE | | | 1 | 2389001520 | |
| 42 | VIS CHC | | | 3 | 2308231480 | |

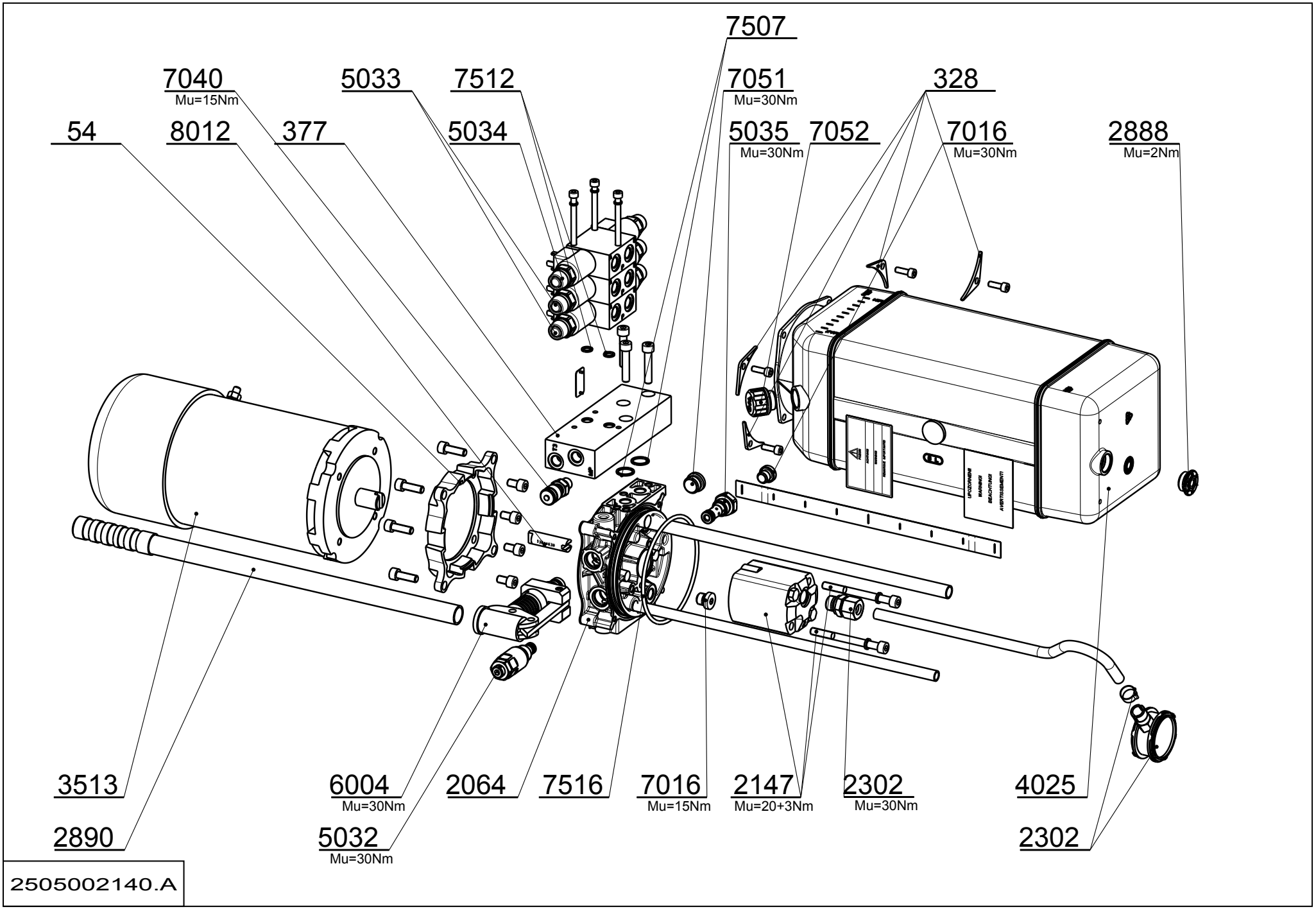
7507
7040
Mu=15Nm
5033
7512
7051
Mu=30Nm
328
54
8012
377
5034
5035
Mu=30Nm
7052
7016
Mu=30Nm
2888
Mu=2Nm
3513
6004
Mu=30Nm
2064
7516
7016
Mu=15Nm
2147
Mu=20+3Nm
2302
Mu=30Nm
4025
2890
5032
Mu=30Nm
2302
2505002140.A

# ▲ CENTRALE HYDRAULIQUE
# CENTRAL HYDRAULIC PLANT



| Rep. | Désignation | Designation | Specification | Qty | Code | Up to / jusqu'à |
|---|---|---|---|---|---|---|
| 54 | BRIDE | FLANGE | | 1 | 2505004300 | |
| 328 | BRIDE | FLANGE | | 4 | 2505004320 | |
| 377 | BLOC FORE | DRILLED BLOCK | | 1 | 2505004330 | |
| 2064 | CENTRALE HYDRAULIQUE | CENTRAL HYDRAULIC PLANT | | 1 | 2505004310 | |
| 2147 | POMPE | PUMP | | 1 | 2505004340 | |
| 2302 | FILTRE | FILTER | | 1 | 2505004350 | |
| 2888 | BOUCHON | PLUG | | 3 | 2505004360 | |
| 2890 | LEVIER | LEVER | | 1 | 2505004370 | |
| 3513 | MOTEUR ASYNCHRONE | | | 1 | 2901010570 | |
| 3513-1 | CHARBON | BRIUSHES | | 4 | 2901010580 | |
| 4025 | RESERVOIR GASOIL | | | 1 | 2505004380 | |
| 5032 | SOUPAPE DE SECURITE | RELIEF VALVE | | 1 | 2505004390 | |
| 5033 | MODULE PRECHAUFFE | | | 2 | 2505004400 | |
| 5033-1 | BOBINE | COIL | | 4 | 2901010590 | |
| 5033-J | JOINT TORIQUE | O-RING | | 1 | 2505004420 | |
| 5034 | MODULE PRECHAUFFE | | | 1 | 2505004430 | |
| 5034-1 | BOBINE | COIL | | 2 | 2901010590 | |
| 5034-J | JOINT TORIQUE | O-RING | | 1 | 2505004420 | |
| 5035 | CLAPET ANTI-RETOUR | ONE-WAY VALVE | | 1 | 2505004440 | |
| 6004 | POMPE A MAIN | HAND PUMP | | 1 | 2505004460 | |
| 7016 | BOUCHON | PLUG | | 2 | 2505004470 | |
| 7040 | PRISE | PLUG SOCKET | | 1 | 2505004480 | |
| 7051 | BOUCHON | PLUG | | 1 | 2501002350 | |
| 7052 | RESERVOIR HYDRAULIQUE | | | 1 | 2505004490 | |
| 7507 | JOINT PLAT | | | 2 | 2505004500 | |
| 7512 | JOINT PLAT | | | 2 | 2505004510 | |

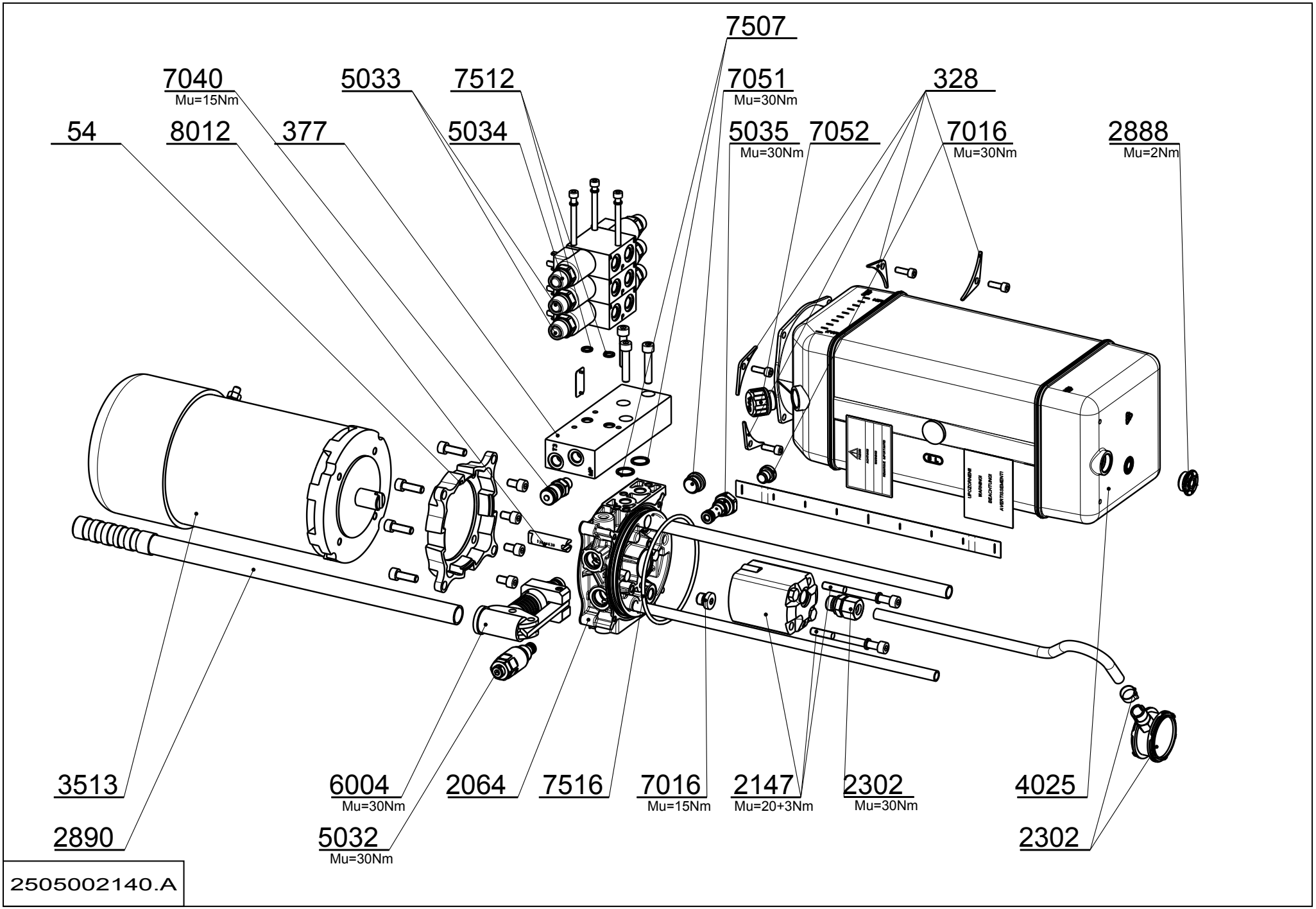
7507
7040
Mu=15Nm
5033
7512
7051
Mu=30Nm
328
54
8012
377
5034
5035
Mu=30Nm
7052
7016
Mu=30Nm
2888
Mu=2Nm
3513
6004
Mu=30Nm
2064
7516
7016
Mu=15Nm
2147
Mu=20+3Nm
2302
Mu=30Nm
4025
2890
5032
Mu=30Nm
2302
2505002140.A

# ▲ CENTRALE HYDRAULIQUE
# CENTRAL HYDRAULIC PLANT



| Rep. | Désignation | Designation | Specification | Qty | Code | Up to / jusqu'à |
|---|---|---|---|---|---|---|
| *7516* | *JOINT PLAT* | | | *1* | *2505004520* | |
| *8012* | *ACCOUPLEMENT MOTEUR* | | | *1* | *2505004530* | |
| | | | | | | |
| | | | | | | |
| | | | | | | |
| | | | | | | |
| | | | | | | |
| | | | | | | |
| | | | | | | |
| | | | | | | |
| | | | | | | |
| | | | | | | |
| | | | | | | |
| | | | | | | |
| | | | | | | |
| | | | | | | |
| | | | | | | |
| | | | | | | |
| | | | | | | |
| | | | | | | |
| | | | | | | |
| | | | | | | |
| | | | | | | |
| | | | | | | |
| | | | | | | |
| | | | | | | |

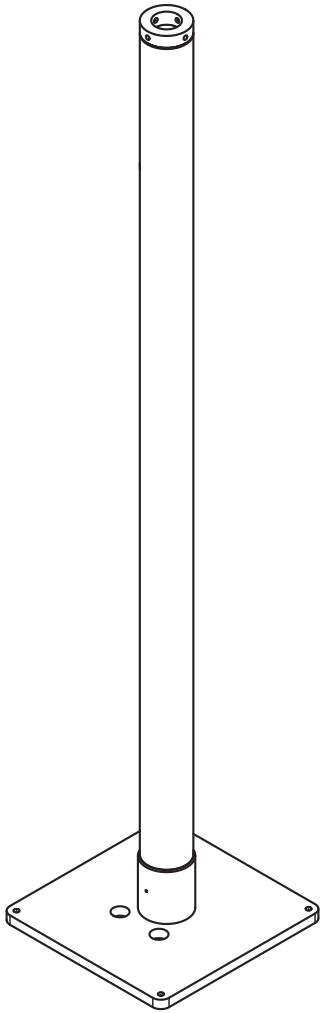

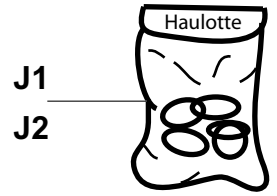


155P254560.C

# ▲ *VÉRIN DE LEVAGE*
# *LIFTING CYLINDER*



| Rep. | Désignation | Designation | Specification | Qty | Code | Up to / jusqu'à |
|---|---|---|---|---|---|---|
| *J1* | *POCHETTE DE JOINTS* | *SEALS KIT* | *VERSION 1* | *1* | *2504000910* | |
| *J2* | *POCHETTE DE JOINTS* | *SEALS KIT* | *VERSION 2* | *1* | *2505005180* | |

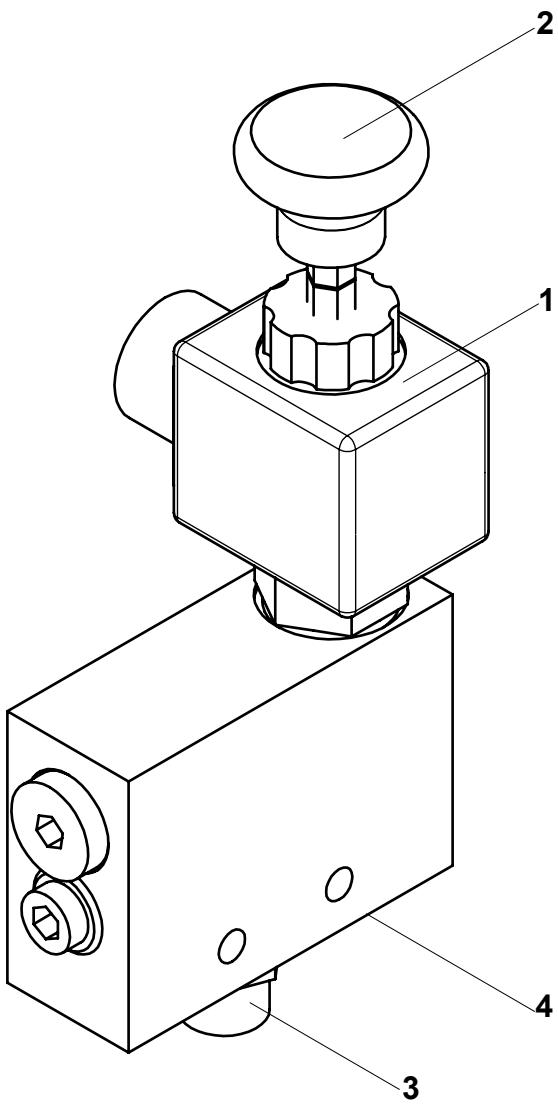


155P246690.B

# ▲ BLOC DESC. SECOURS
# EMERGENCY LOWERING BLOCK



| Rep. | Désignation | Designation | Specification | Qty | Code | Up to / jusqu'à |
|---|---|---|---|---|---|---|
| *1* | *BOBINE* | *COIL* | *BOBINE* | *1* | *2440210850* | |
| *2* | *MOLETTE* | *THUMB WHEEL* | *MOLETTE* | *1* | *2503002540* | |
| *3* | *UNION MALE* | *MALE UNION* | *1/4'BSPP - 10L UNION* | *1* | *2420104800* | |
| *4* | *UNION MALE* | *MALE UNION* | *1/4" BSPP - JIC 7/16 UNION* | *1* | *2505004200* | |

**J1**

**J2**

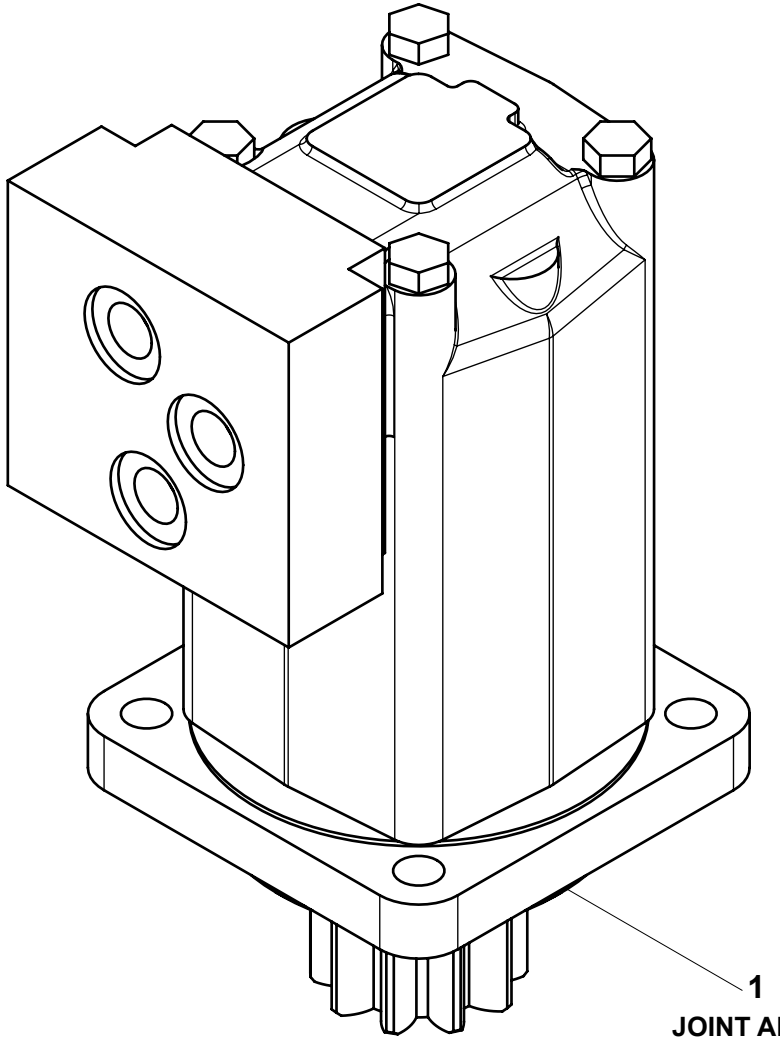

**1**

**JOINT ARBRE /**
*SHAFT SEAL*

2431203430.A

# ▲ *MOTEUR ORIENTATION*
# *ORIENTATION MOTOR*



| Rep. | Désignation | Designation | Specification | Qty | Code | Up to / jusqu'à |
|---|---|---|---|---|---|---|
| *1* | *JOINT ARBRE* | *SHAFT SEAL* | *VERSION 1* | *1* | *2505004560* | |
| *J1* | *POCHETTE DE JOINTS* | *SEAL KIT* | *VERSION 1* | *1* | *2421693530* | |
| *J2* | *POCHETTE DE JOINTS* | *SEAL KIT* | *VERSION 2* | *1* | *2505007440* | |

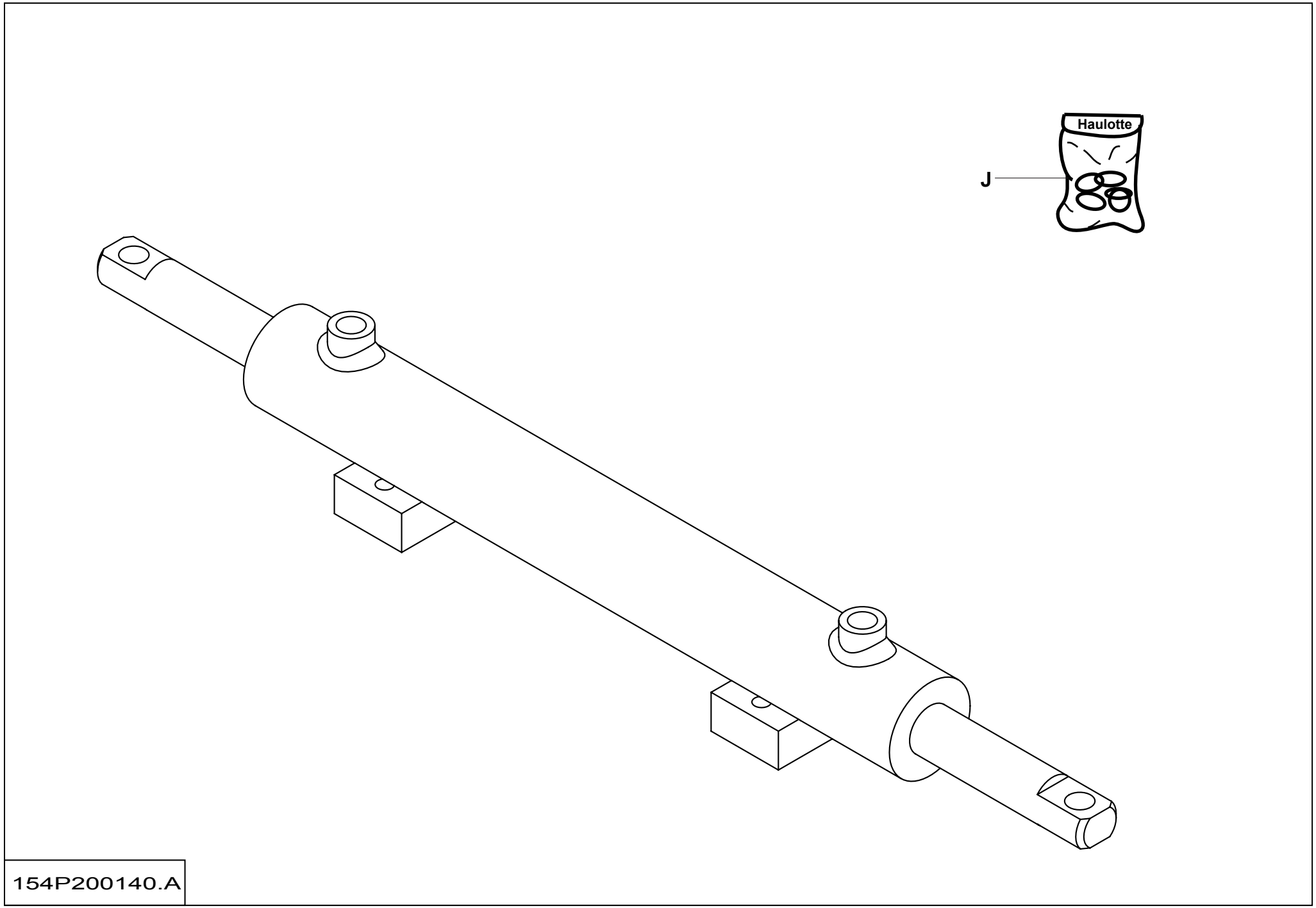
Haulotte
J
154P200140.A

## ▲ *VÉRIN DE DIRECTION*
## *STEERING CYLINDER*



| Rep. | Désignation | Designation | Specification | Qty | Code | Up to / jusqu'à |
|---|---|---|---|---|---|---|
| *J* | *POCHETTE DE JOINTS* | *SEAL KIT* | | *1* | *2421693840* | |

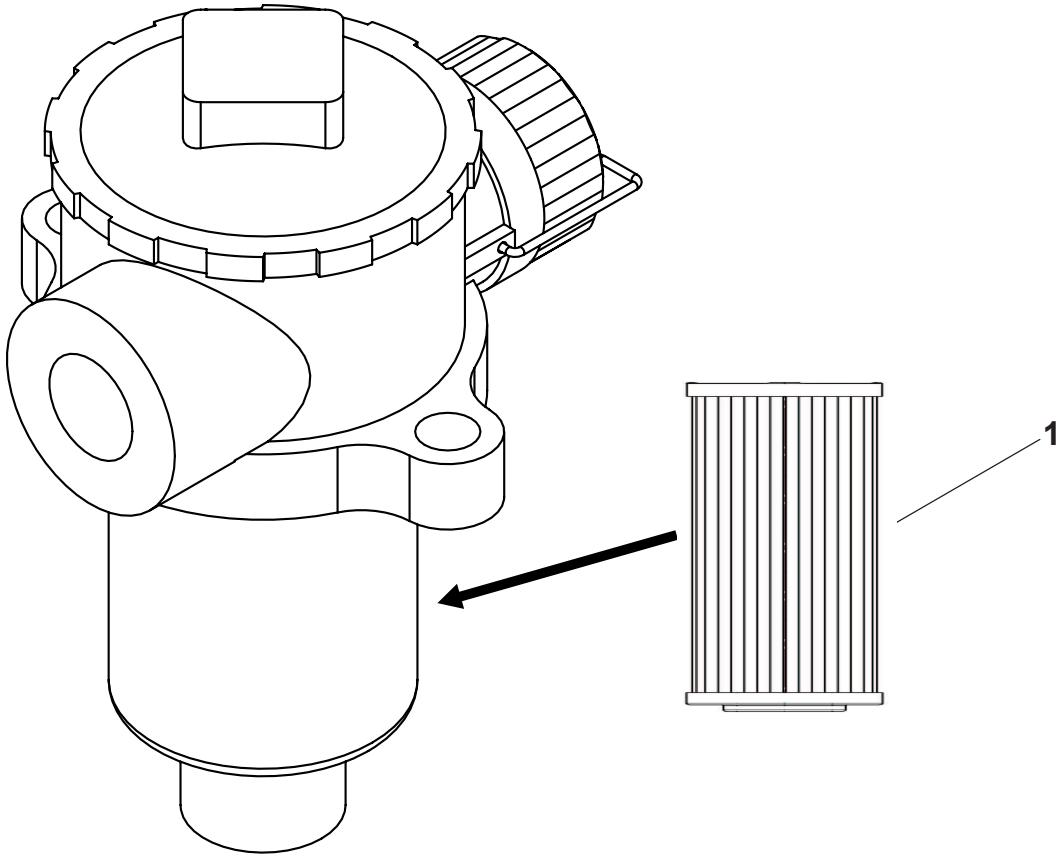


2505000780.A

# ▲ *FILTRE PRESSION*
# *PRESSURE FILTER*



| Rep. | Désignation | Designation | Specification | Qty | Code | Up to / jusqu'à |
|---|---|---|---|---|---|---|
| *1* | *CARTOUCHE FILTRE À HUILE* | | | *1* | *2505000970* | |

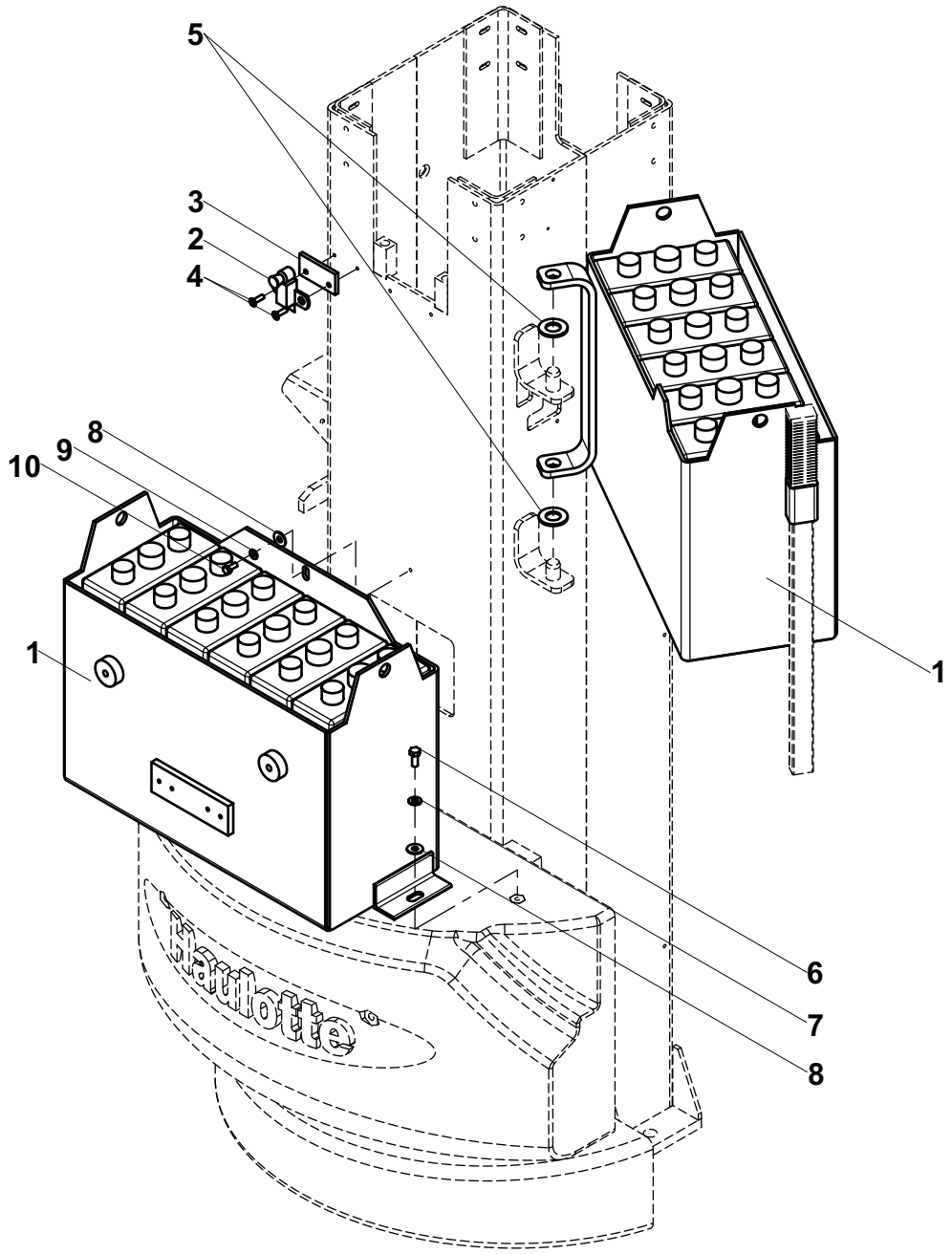


155P243020.B

# ▲ ENSEMBLE BATTERIE
# BATTERY UNIT



| Rep. | Désignation | Designation | Specification | Qty | Code | Up to / jusqu'à |
|---|---|---|---|---|---|---|
| 1 | ENS. BATTERIE TRACTION | TRACTION BATTERY ASSEMBLY | 24V - 240AH | 1 | 2440208420 | |
| 2 | VERROU SANS GACHE | BOLT WITHOUT CLASP | | 1 | 2422204950 | |
| 3 | CALE | CHOCK | | 1 | 155P248230 | |
| 4 | VIS | SCREW | FHC M6X20-20 CL.10.9 DC | 2 | 2337331050 | |
| 5 | RONDELLE PLATE | FLAT WASHER | M 20 ZB | 2 | 2351112150 | |
| 6 | VIS | SCREW | H M8X20-20 CL.8.8 ZB | 2 | 2331231420 | |
| 7 | RONDELLE CONIQUE STRIÉE | RIDGED CONICAL DISC | M 8 ZB | 2 | 2351902850 | |
| 8 | RONDELLE PLATE | FLAT WASHER | L 8 ZB | 3 | 2351113070 | |
| 9 | RONDELLE CONIQUE STRIÉE | RIDGED CONICAL DISC | M 6 ZB | 1 | 2351902840 | |
| 10 | VIS | SCREW | H M6X16-16 CL.8.8 ZB | 1 | 2331231310 | |

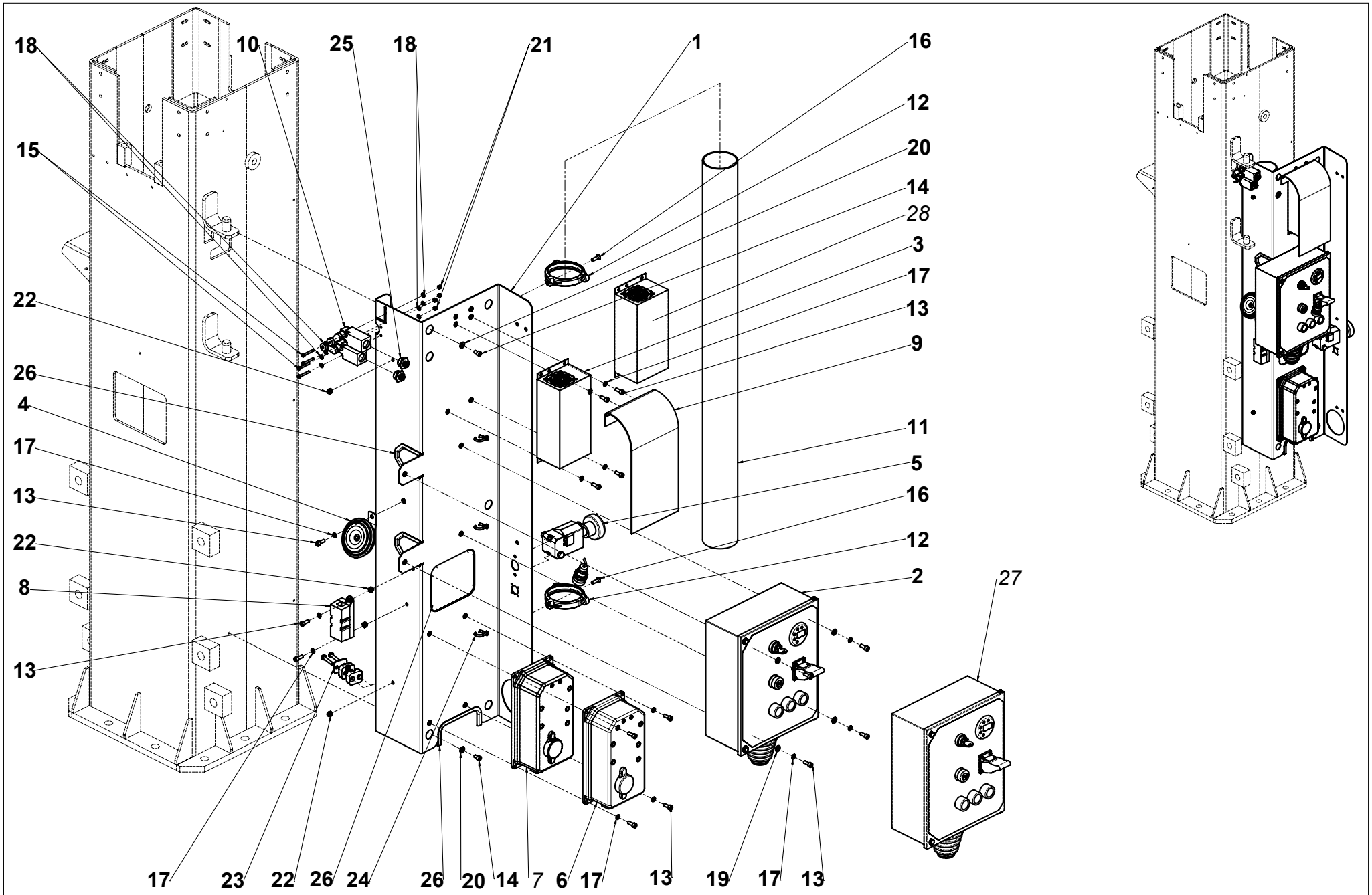


155P235500.J

**Reperes 7, 27 et 28: pour montage uniquement sur machines types STAR 22/26J**
*Items 7, 27 and 28: for assembly only on standard machines STAR 22/26J*

# ENSEMBLE ÉLECTRICITÉ - STAR 8 (22J) - STAR (26J)
# ELECTRICITY ASSEMBLY - STAR 8 (22J) - STAR (26J)



| Rep. | Désignation | Designation | Specification | Qty | Code | Up to / jusqu'à |
|---|---|---|---|---|---|---|
| 1 | TÔLE | PLATE | | 1 | 155P233580 | |
| **2** | **ENS. COFFRET TOURELLE** | **TURNTABLE BOX ASSEMBLY** | **VERSION CE** | **1** | **155P258750** | **STAR 8/10 - SEE DETAILS** |
| 3 | CHARGEUR DE BATTERIE | BATTERY CHARGER | VERSION CE | 1 | 2901009660 | **STAR 8/10** |
| 4 | AVERTISSEUR KLAXON | KLAXON (WARNING SIGNAL) | 24V | 1 | 2440103120 | |
| 5 | COUPE BATTERIE | BATTERY CUT-OFF | | 1 | 2440306180 | |
| 6 | VARIATEUR | VARIABLE SPEED UNIT | VERSION CE | 1 | 2901005980 | **STAR 8/10** |
| 7 | VARIATEUR | VARIABLE SPEED UNIT | VERSION US | 1 | 2901004370 | **STAR 22/26J** |
| 8 | PORTE FUSIBLE | FUSE HOLDER | | 1 | 2441608140 | |
| 9 | PROTECTION | PROTECTION | | 1 | 155P244330 | |
| 10 | INTERRUPTEUR DE POSITION | POSITION SWITCH | | 1 | 2440901490 | |
| 11 | TUBE PVC | PVC TUBE | Ø80 LG 1000 | 1 | 153D156150 | |
| 12 | COLLIER PROPYLÈNE LYRE | | Ø80 | 2 | 2389003030 | |
| 13 | VIS | SCREW | CHC M6X16-16 CL.8.8 ZB | 12 | 2308231480 | |
| 14 | VIS | SCREW | CHC M6X10-10 CL.8,8 ZB | 1 | 2308231460 | |
| 15 | VIS | SCREW | CHC M4X30-20 CL.8,8 ZB | 2 | 2308231630 | |
| 16 | VIS | SCREW | FHC M6X20-20 CL.10.9 DC | 1 | 2337331050 | |
| 17 | RONDELLE À DENTS | | DEC 6 ZB | 15 | 2351301070 | |
| 18 | RONDELLE PLATE | FLAT WASHER | M 4 ZB | 8 | 2351112030 | |
| 19 | RONDELLE PLATE | FLAT WASHER | M 6 ZB | 4 | 2351112050 | |
| 20 | RONDELLE CONIQUE STRIÉE | RIDGED CONICAL DISC | M 6 ZB | 2 | 2351902840 | |
| 21 | ECROU AUTOFREINÉ | | H FR M4 CL. 8 ZB | 4 | 2349221480 | |
| 22 | ECROU AUTOFREINÉ | | H FR M6 CL. 8 ZB | 4 | 2349221490 | |
| 23 | COLLIER DE FIXATION | CABLE CLIP | Ø11 | 1 | 2389003080 | |
| 24 | COLLIER POLYAMIDE 6/6 4. | | | 23 | 2389002870 | |
| 25 | PRESSE-ÉTOUPE RÉDUCTEUR | REDUCER PACKING BOX | S020246 | 2 | 2421607690 | |
| 26 | GALON NON FEUTRÉ | BRAID (NOT FELT) | | 1.1 | 2420701180 | |

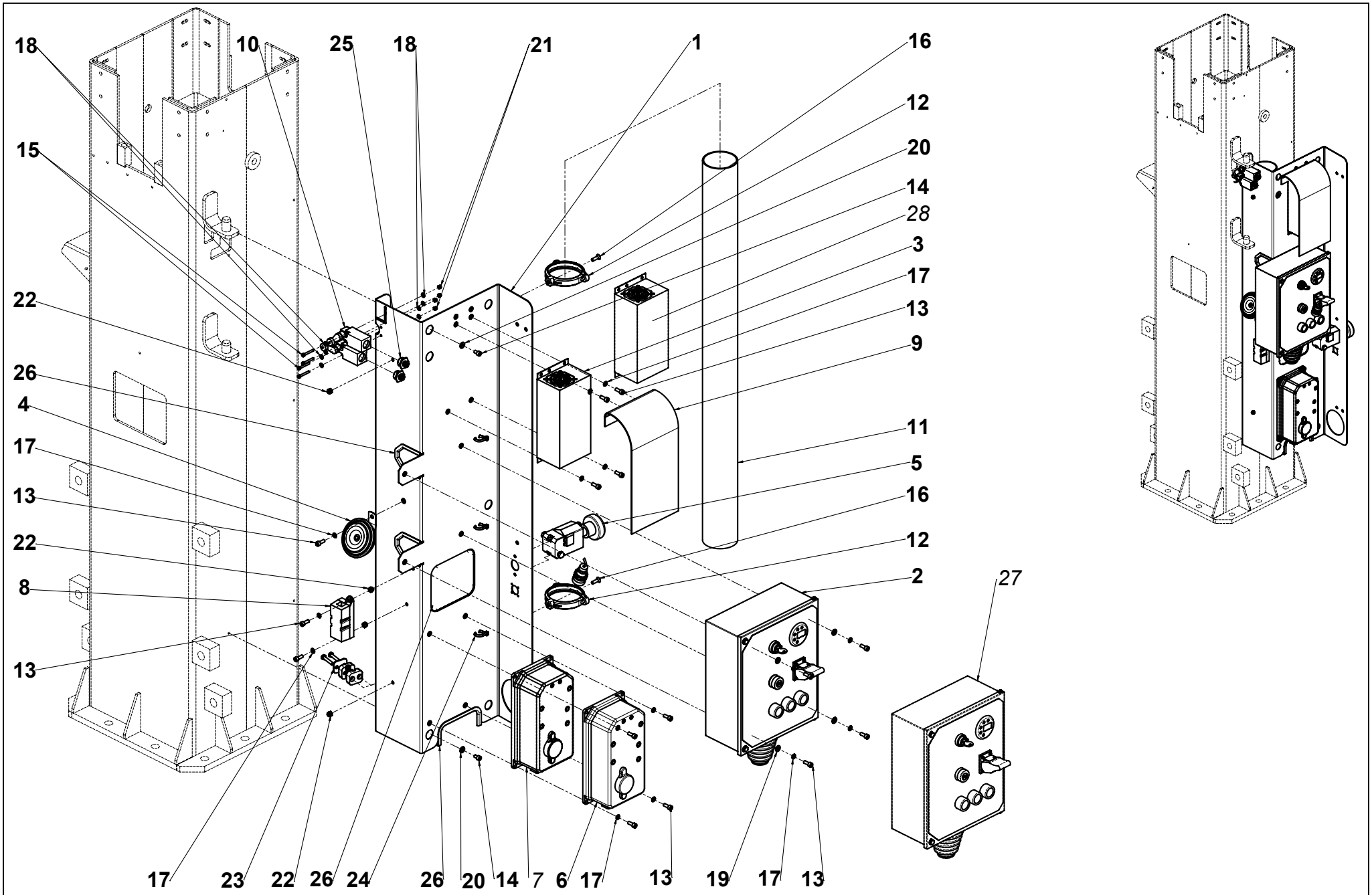


155P235500.J

**Reperes 7, 27 et 28: pour montage uniquement sur machines types STAR 22/26J**
*Items 7, 27 and 28: for assembly only on standard machines STAR 22/26J*

# ENSEMBLE ÉLECTRICITÉ - STAR 8 (22J) - STAR (26J)
# ELECTRICITY ASSEMBLY - STAR 8 (22J) - STAR (26J)



| Rep. | Désignation | Designation | Specification | Qty | Code | Up to / jusqu'à |
|---|---|---|---|---|---|---|
| **27** | **ENS. COFFRET TOURELLE** | **TURNTABLE BOX ASSEMBLY** | **VERSION US** | **1** | **155P258740** | **STAR 22/26J - SEE DETAILS** |
| 28 | CHARGEUR DE BATTERIE | BATTERY CHARGER | VERSION US | 1 | 2901009600 | **STAR 22/26J** |

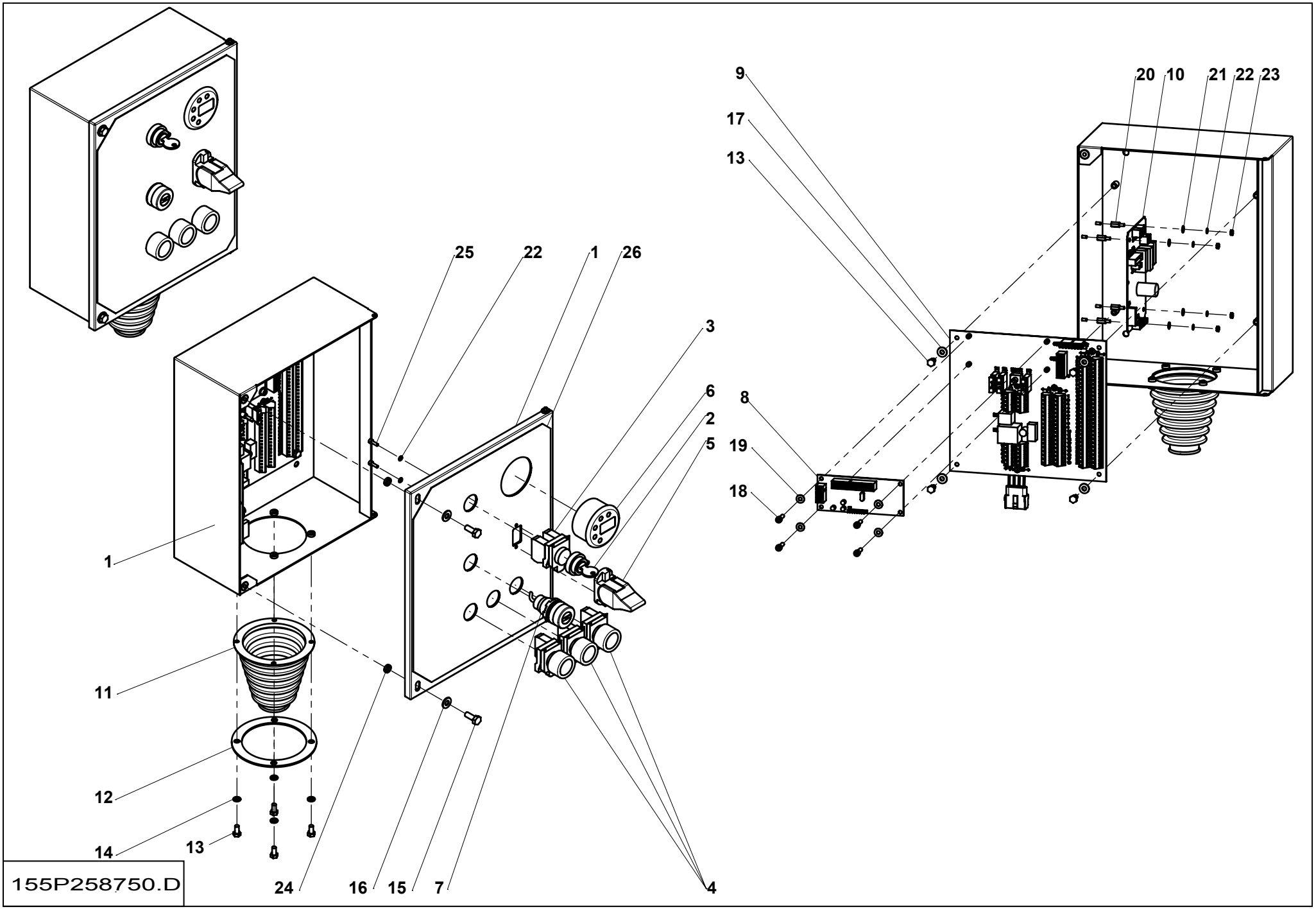
9
17
13
20
10
21
22
23
25
22
1
26
3
6
2
5
8
19
18
1
11
12
14
13
24
16
15
7
4
155P258750.D

## ▲ ENS. COFFRET TOURELLE
## LOWER BOX ASSEMBLY



| Rep. | Désignation | Designation | Specification | Qty | Code | Up to / jusqu'à |
|---|---|---|---|---|---|---|
| 1 | ELECTRICITE TOURELLE | TURNTABLE ELECTRICITY | | 1 | 155P258820 | |
| 2 | TÊTE DE BOUTON TOURNANT | TURN KNOB HEAD | | 1 | 2442009710 | |
| 3 | CORPS COMPLET | CONTACT BLOCK | 2 'F' | 1 | 2440314390 | |
| 4 | BOUTON POUSSOIR | PUSH BUTTON | Ø22 BLACK | 3 | 2440206800 | |
| 5 | MANIPULATEUR 1 AXE | SINGLE-AXIS JOYSTICK | | 1 | 290101790 | |
| 6 | INDICATEUR | INDICATOR | 24V-80V IP64 | 1 | 2440904140 | |
| 7 | INDICATEUR EXT CHARG BAT | BATTERY CHARGE EXTERNAL INDI- | | 1 | 2440904160 | |
| 8 | CARTE SERIAL | SERIAL BOARD | | 1 | 2440316720 | |
| 9 | PLATINE CI COMPLET | COMPLETE PCB PLATE | | 1 | 154P202670 | |
| 10 | CARTE PESAGE | WEIGHING CARD | BPE - LLD300M82 | 1 | 2440309330 | |
| 11 | SOUFFLET | GAITER | | 1 | 2421903480 | |
| 12 | RONDELLE POUR SOUFFLET | | | 1 | 146D141970 | |
| 13 | VIS | SCREW | H M5X10-10 CL.8.8 ZB | 8 | 2331231200 | |
| 14 | RONDELLE À DENTS | | DEC 5 ZB | 4 | 2351301060 | |
| 15 | VIS | SCREW | H M6X16-16 CL.8.8 ZB | 2 | 2331231310 | |
| 16 | RONDELLE PLATE | FLAT WASHER | M 6 ZB | 2 | 2351112050 | |
| 17 | RONDELLE PLATE | FLAT WASHER | M 5 ZB | 4 | 2351112040 | |
| 18 | VIS | SCREW | CHC M4X16-16 CL.8,8 ZB | 4 | 2308231180 | |
| 19 | RONDELLE PLATE | FLAT WASHER | M 4 ZB | 4 | 2351112030 | |
| 20 | ENTRETOISE | SPACER | | 4 | 2440501320 | |
| 21 | RONDELLE PLATE | FLAT WASHER | M 3 ZB | 4 | 2351112010 | |
| 22 | RONDELLE À DENTS | | DEC 3 ZB | 6 | 2351301030 | |
| 23 | ECROU | NUT | H M3 CL. 8 ZB | 4 | 2341221010 | |
| 24 | RONDELLE | WASHER | | 2 | 2700500190 | |
| 25 | VIS | SCREW | CHC M3X10-10 CL.8.8 ZB | 2 | 2700100640 | |
| 26 | PUPITRE TOURELLE | TURNTABLE CONTROL BOX | | 1 | 3078148300 | |

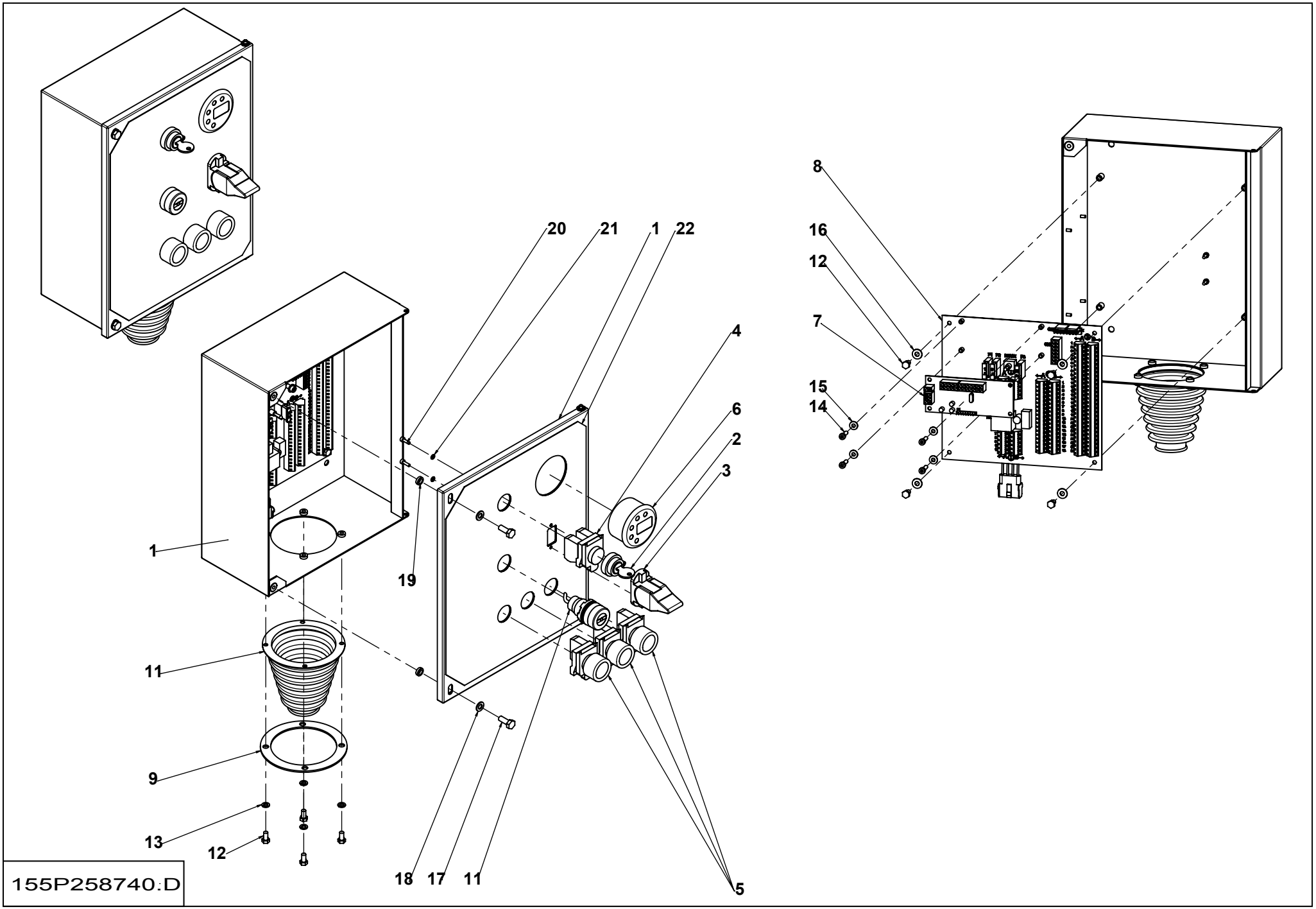
20
21
1
22
4
6
2
3
19
1
11
9
13
12
18
17
11
5
8
16
12
7
15
14
155P258740.D

## ▲ ENS. COFFRET TOURELLE
## LOWER BOX ASSEMBLY



| Rep. | Désignation | Designation | Specification | Qty | Code | Up to / jusqu'à |
|---|---|---|---|---|---|---|
| 1 | ELECTRICITE TOURELLE | TURNTABLE ELECTRICITY | | 1 | 155P258820 | |
| 2 | TÊTE DE BOUTON TOURNANT | TURN KNOB HEAD | | 1 | 2442009710 | |
| 3 | MANIPULATEUR 1 AXE | SINGLE-AXIS JOYSTICK | | 1 | 2901011790 | |
| 4 | CORPS COMPLET | CONTACT BLOCK | 2 'F' | 1 | 2440314390 | |
| 5 | BOUTON POUSSOIR | PUSH BUTTON | Ø22 NOIR / BLACK | 3 | 2440206800 | |
| 6 | INDICATEUR | INDICATOR | 24V-80V IP64 | 1 | 2440904140 | |
| 7 | CARTE SERIAL | SERIAL BOARD | | 1 | 2440316720 | |
| 8 | PLATINE CI COMPLET | COMPLETE PCB PLATE | | 1 | 154P202670 | |
| 9 | RONDELLE POUR SOUFFLET | | | 1 | 146D141970 | |
| 10 | SOUFFLET | GAITER | | 1 | 2421903480 | |
| 11 | INDICATEUR EXT CHARG BAT | BATTERY CHARGE EXTERNAL INDI- | | 1 | 2440904160 | |
| 12 | VIS | SCREW | H M5X10-10 CL.8.8 ZB | 8 | 2331231200 | |
| 13 | RONDELLE À DENTS | | DEC 5 ZB | 4 | 2351301060 | |
| 14 | VIS | SCREW | CHC M4X16-16 CL.8,8 ZB | 4 | 2308231180 | |
| 15 | RONDELLE PLATE | FLAT WASHER | M 4 ZB | 4 | 2351112030 | |
| 16 | RONDELLE PLATE | FLAT WASHER | M 5 ZB | 4 | 2351112040 | |
| 17 | VIS | SCREW | H M6X16-16 CL.8.8 ZB | 2 | 2331231310 | |
| 18 | RONDELLE PLATE | FLAT WASHER | Z 6 ZB | 2 | 2351115100 | |
| 19 | RONDELLE | WASHER | | 2 | 2700500190 | |
| 20 | VIS | SCREW | CHC M3X10-10 CL.8.8 ZB | 4 | 2700100640 | |
| 21 | RONDELLE À DENTS | | DEC 3 ZB | 8 | 2351301030 | |
| 22 | PUPITRE TOURELLE | TURNTABLE CONTROL BOX | | 1 | 3078148300 | |
| | | | | | | |
| | | | | | | |
| | | | | | | |
| | | | | | | |

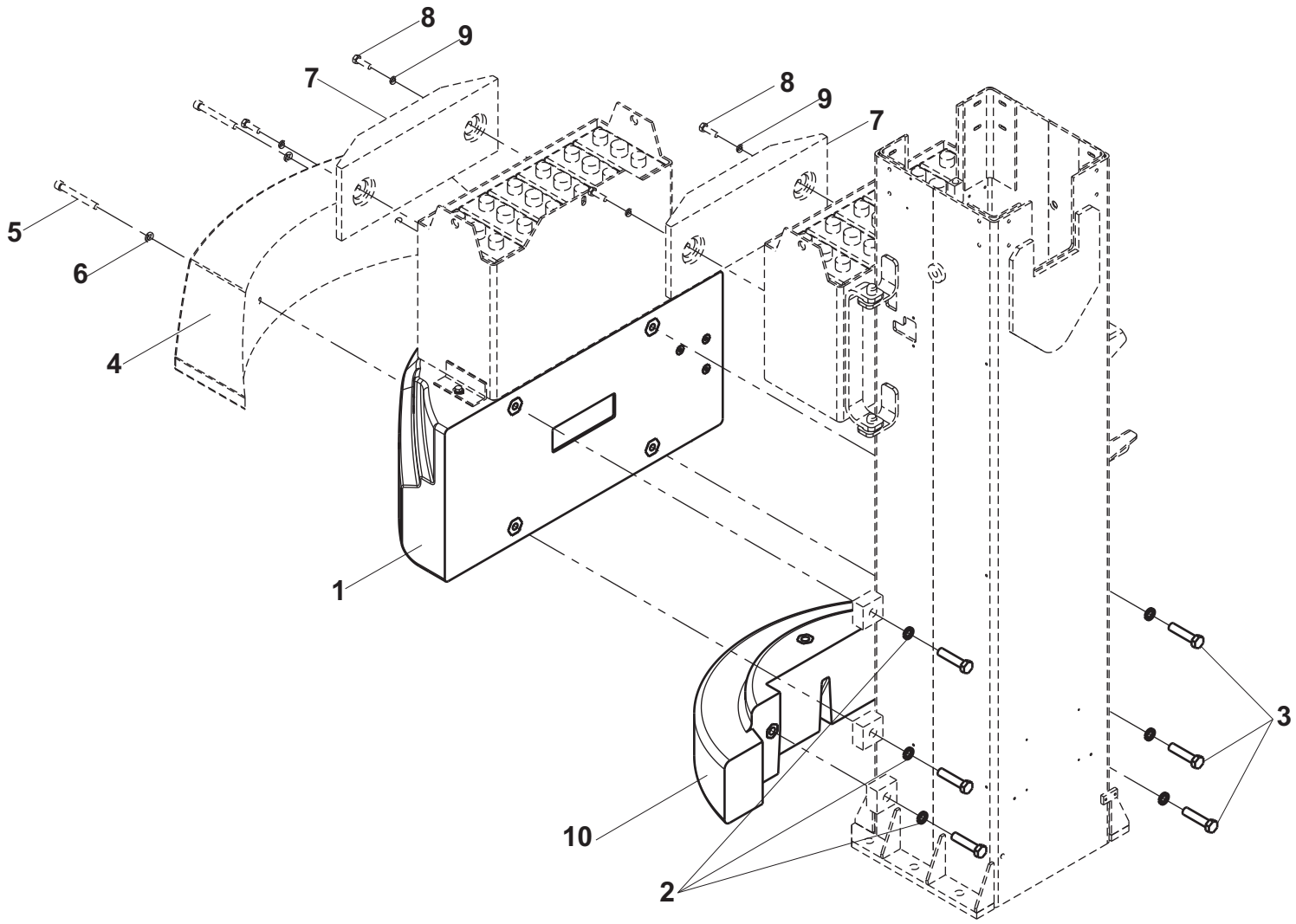


**Les repères 4, 5, 6, 7, 8 et 9 sont exclusivement montés sur machines type STAR 26 J**
*Items 4, 5, 6, 7, 8 and 9 are exclusively mounted on machines STAR 26 J*

155P243000.E

# ▲ ENSEMBLE CONTREPOIDS - STAR 8 (22J) - STAR 10 (26J)
# COUNTERWEIGHT ASSEMBLY - STAR 8 (22J) - STAR 10 (26J)



| Rep. | Désignation | Designation | Specification | Qty | Code | Up to / jusqu'à |
|---|---|---|---|---|---|---|
| 1 | CONTREPOIDS | | | 1 | 154B163970 | |
| 2 | RONDELLE ÉLASTIQUE | RUBBER WASHER | W 16 ZB | 6 | 2351201120 | |
| 3 | VIS | SCREW | H M16X70-38 CL.8.8 ZB | 6 | 2301232410 | |
| 4 | CONTREPOIDS | | | 1 | 155P283440 | **STAR 26J only** |
| 5 | VIS | SCREW | CHC M12X100-36 CL.8.8 ZB | 2 | 2700100190 | **STAR 26J only** |
| 6 | RONDELLE ÉLASTIQUE | RUBBER WASHER | W 12 ZB | 2 | 2351201100 | **STAR 26J only** |
| 7 | CONTREPOIDS ADDITIONNEL | ADDITIONAL COUNTERWEIGHT | | 1 | 155P200000 | **STAR 26J only** |
| 8 | VIS | SCREW | H M10X35-35 CL.8.8 ZB | 1 | 2301231770 | **STAR 26J only** |
| 9 | RONDELLE ÉLASTIQUE | RUBBER WASHER | W 10 ZB | 1 | 2351201090 | **STAR 26J only** |
| 10 | CONTREPOIDS | | | 1 | 155P240960 | |

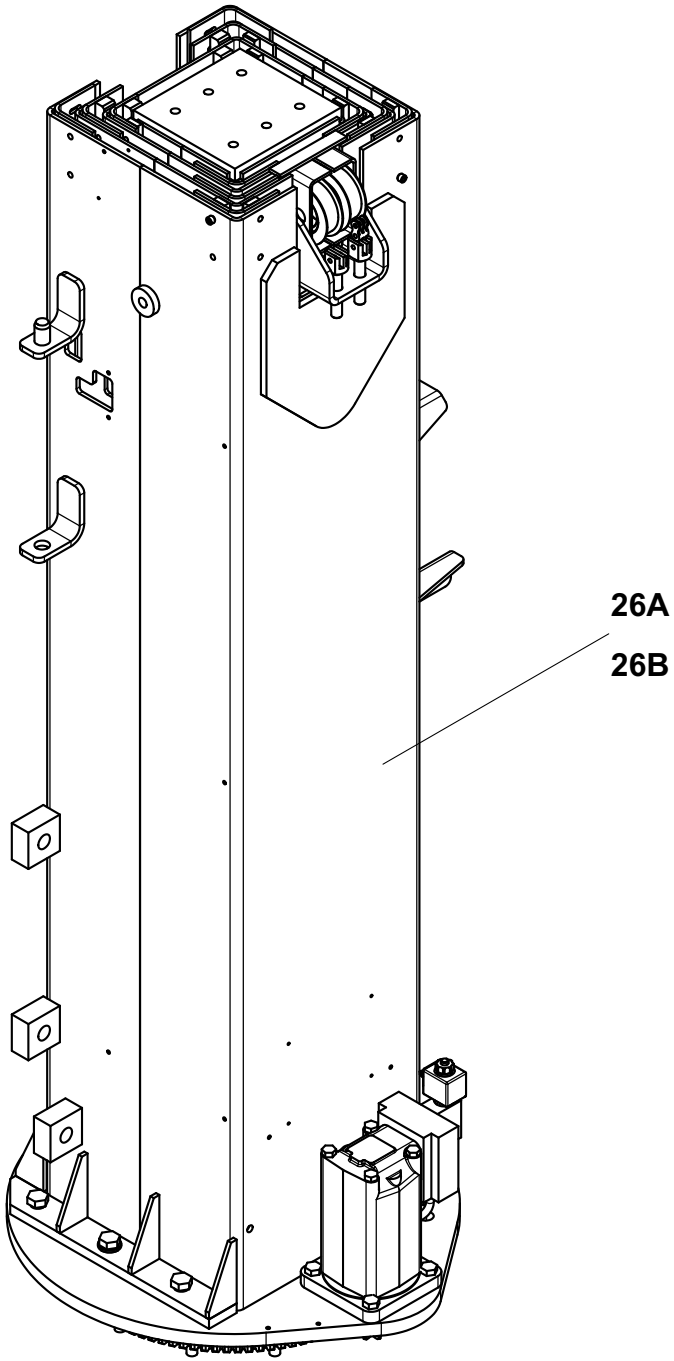


155-3

# ▲ MÂT TÉLESCOPIQUE
# TELESCOPIC MAST

◄ C ►

| Rep. | Désignation | Designation | Specification | Up to / jusqu'à |
|---|---|---|---|---|
| **26A** | **MÂT TÉLESCOPIQUE 8 METRES** | **TELESCOPIC MAST 8 METERS** | **STAR 8 (22J)** | |
| **26B** | **MÂT TÉLESCOPIQUE 10 METRES** | **TELESCOPIC MAST 10 METERS** | **STAR 10 (26J)** | |

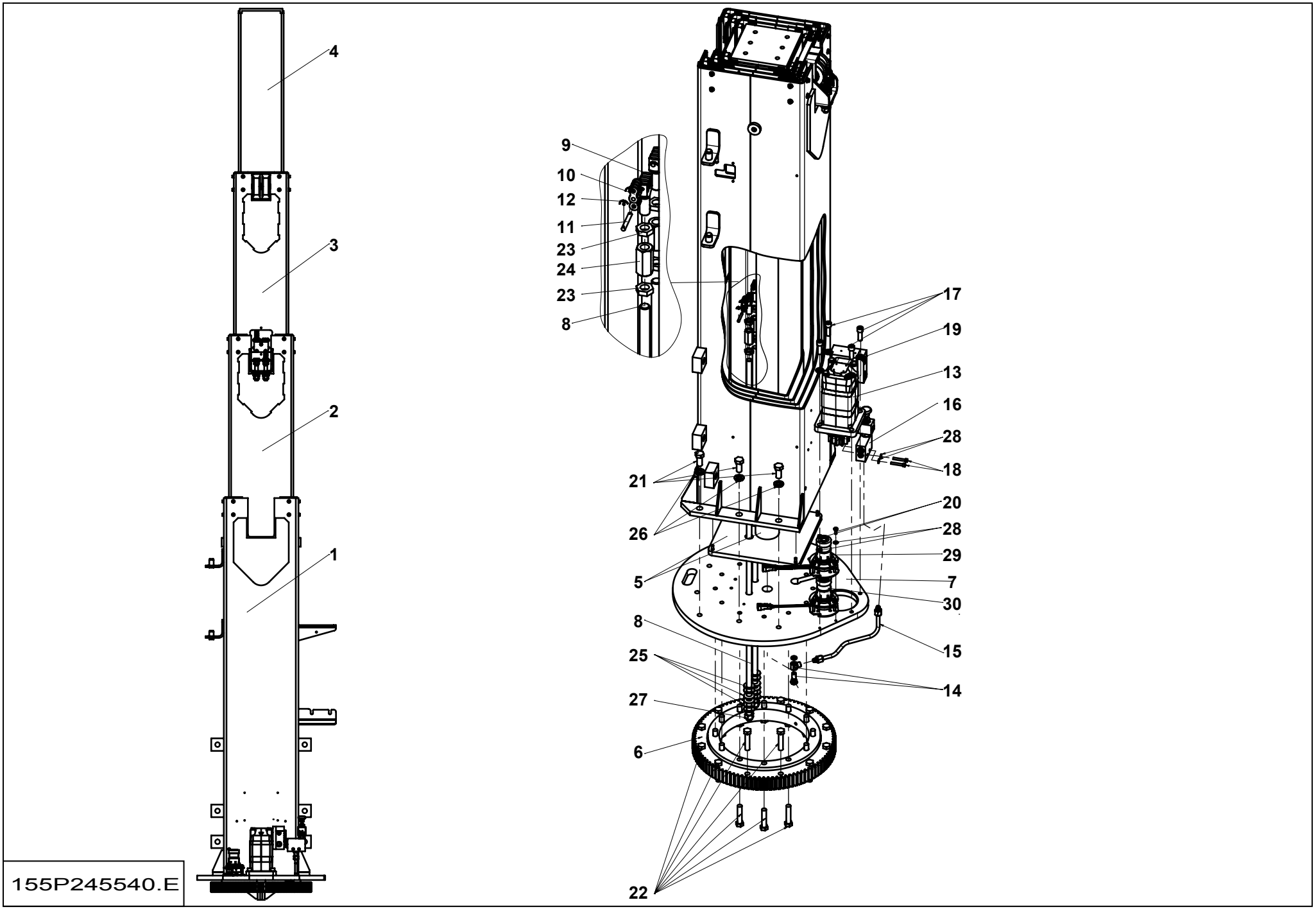
4
3
2
1
9
10
12
11
23
24
23
8
17
19
13
16
28
18
21
26
20
28
29
7
30
5
8
25
15
14
27
6
22
155P245540.E

# MÂT TÉLESCOPIQUE 8 METRES - STAR 8 (22J)
# TELESCOPIC MAST 8 METERS - STAR 8 (22J)



| Rep. | Désignation | Designation | Specification | Qty | Code | Up to / jusqu'à |
|---|---|---|---|---|---|---|
| **1** | **PIED DE MAT** | **MAST FOOT** | | **1** | **155P280980** | **SEE DETAILS** |
| **2** | **CAISSON** | **BOX** | **N°1** | **1** | **155P261310** | **SEE DETAILS** |
| **3** | **CAISSON** | **BOX** | **N°2** | **1** | **155P256550** | **SEE DETAILS** |
| **4** | **CAISSON** | **BOX** | **N°3** | **1** | **155P245550** | **SEE DETAILS** |
| **5** | **VÉRIN DE LEVAGE** | **LIFT CYLINDER** | | **1** | **155P245810** | **SEE DETAILS** |
| 6 | COURONNE D'ORIENTATION | SLEW RING | | 1 | 2420311700 | |
| 7 | PLATINE | PLATE | | 1 | 155P233680 | |
| 8 | TIRANT | TIE ROD | | 2 | 155P231730 | |
| 9 | CHAPE DE CHAÎNE | | LH10-66 | 2 | 103C160060 | |
| 10 | CHAÎNE | CHAIN | S6047 | 2 | 2323000040 | |
| 11 | AXE DE CHAÎNE | | LH10-66 | 2 | 2323000090 | |
| 12 | GOUPILLE | PIN | V Ø1,6 X 20 NF | 4 | 2352111790 | |
| **13** | **MOTEUR ORIENTATION** | **SLEWING MOTOR** | | **1** | **2431203430** | **SEE DETAILS** |
| 14 | RACCORD | FITTING | | 1 | 2501000980 | |
| 15 | TUBE HYDRAULIQUE | HYDRAULIC TUBE | | 1 | 155P235710 | |
| **16** | **BLOC DESC. SECOURS** | **EMERGENCY LOW. UNIT** | | **1** | **155P246690** | **SEE DETAILS** |
| 17 | VIS | SCREW | CHC M12X35-35 CL.8,8 ZB | 4 | 2308232120 | |
| 18 | VIS | SCREW | CHC M6X40-24 CL.8,8 ZB | 2 | 2308231530 | |
| 19 | PRONDELLE PLATE | PLAT WASHER | Z 12 ZB | 4 | 2351111080 | |
| 20 | VIS | SCREW | H M6X16-16 CL.8,8 ZB | 2 | 2331231310 | |
| 21 | VIS | SCREW | H M16X35-35 CL.8.8 ZB | 8 | 2331232210 | |
| 22 | VIS | SCREW | H M14X65-34 CL.8.8 ZB | 24 | 2301232420 | |
| 23 | ECROU BAS | THIN NUT | HM M16 CL. 4 ZB | 4 | 2341222070 | |
| 24 | ECROU | NUT | | 2 | 2349223100 | |
| 25 | RONDELLE RESSORT CONIQUE | CONICAL SPRING WASHER | 16,3-34-2 DC | 12 | 2351402180 | |
| 26 | ENTRETOISE | BRACE | | 8 | 126D162220 | |

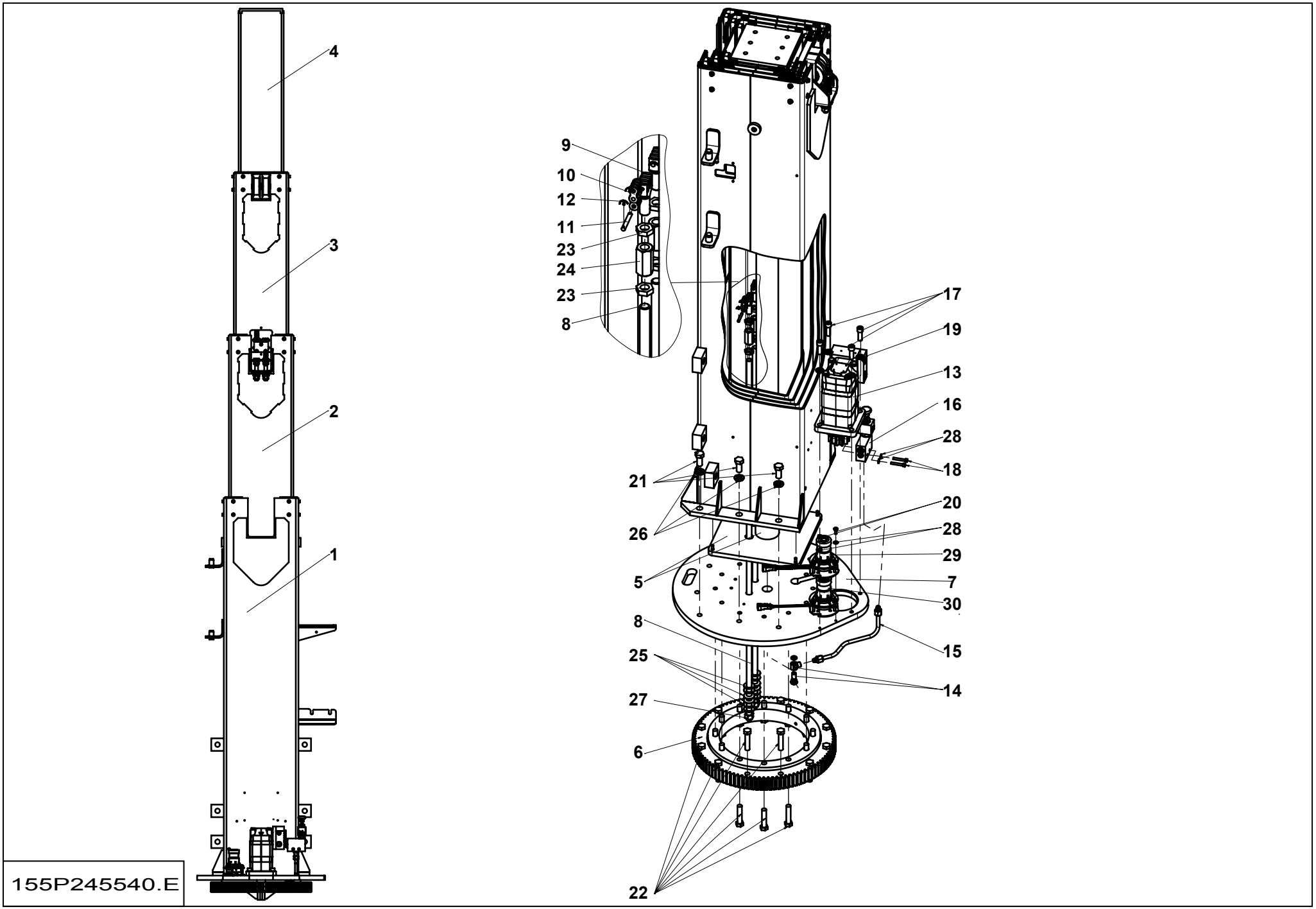
4
3
2
1
9
10
12
11
23
24
23
8
17
19
13
16
28
18
21
26
20
28
29
7
30
5
8
25
27
6
15
14
22
155P245540.E

# ▲ MÂT TÉLESCOPIQUE 8 METRES - STAR 8 (22J)
# TELESCOPIC MAST 8 METERS - STAR 8 (22J)



| Rep. | Désignation | Designation | Specification | Qty | Code | Up to / jusqu'à |
|---|---|---|---|---|---|---|
| 27 | ECROU AUTOFREINÉ | | H FR M16 CL. 8 ZB | 2 | 2349221540 | |
| 28 | RONDELLE CONIQUE STRIÉE | RIDGED CONICAL DISC | M 6 ZB | 2 | 2351902840 | |
| 29 | DEVERS | TILT | VERSION CE | 1 | 118C153260 | **STAR 8/10** |
| 30 | DEVERS | TILT | VERSION US | 1 | 2901016260 | **STAR 22/26J** |

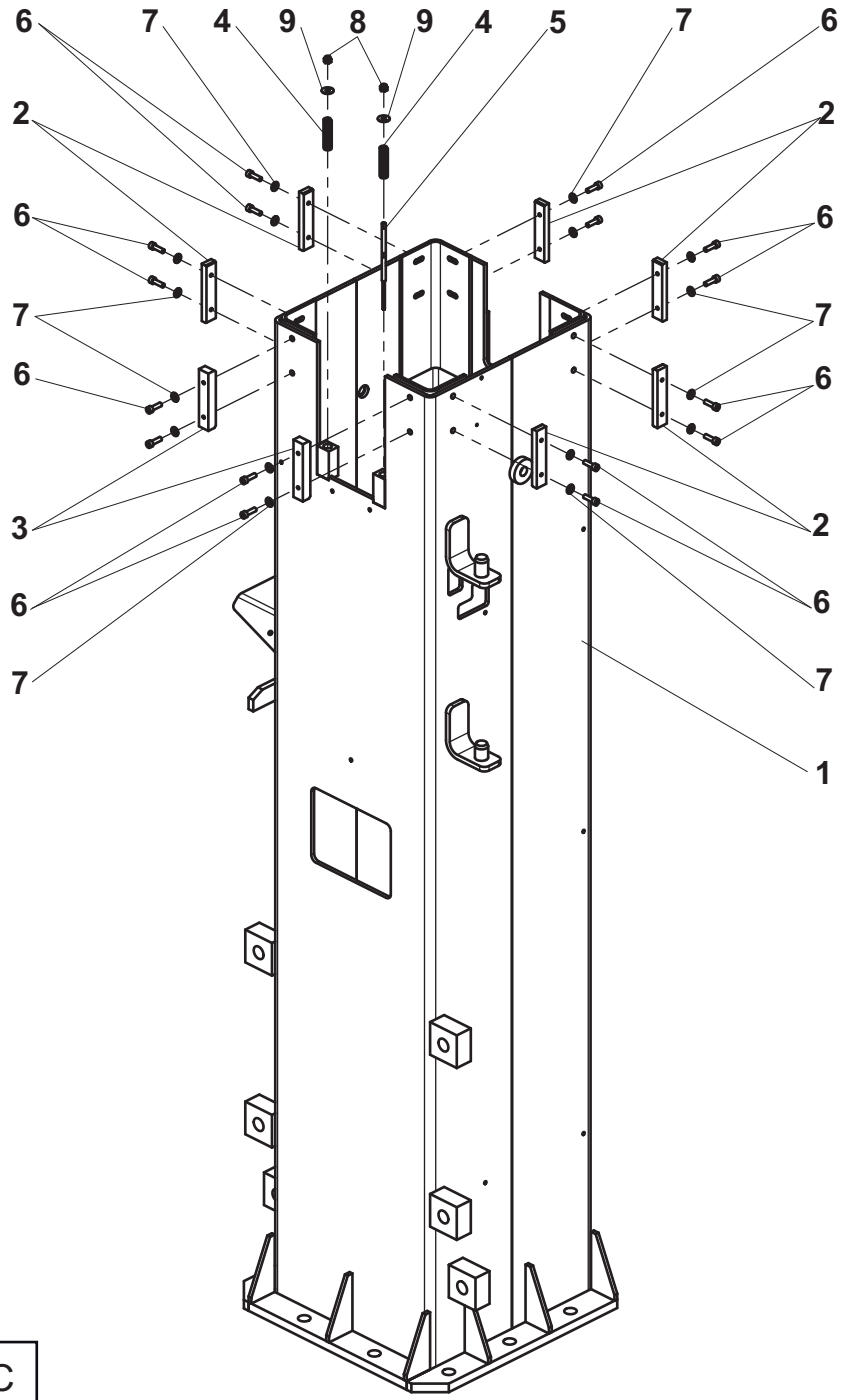


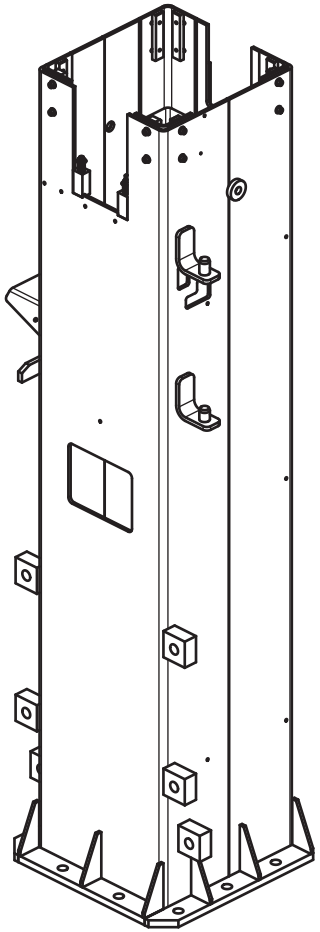

155P280980.C

# ▲ *PIED DE MAT*
# *MAST FOOT*



| Rep. | Désignation | Designation | Specification | Qty | Code | Up to / jusqu'à |
|---|---|---|---|---|---|---|
| *1* | *PIED DE MAT* | *MAST FOOT* | | *1* | *155P271390* | |
| *2* | *PATIN DE GUIDAGE* | *GUIDE PAD* | *100X20 EP 10MM* | *6* | *103D164340* | |
| *3* | *PATIN DE GUIDAGE* | *GUIDE PAD* | *100X20 EP 16MM* | *2* | *155P233300* | |
| *4* | *RESSORT DE COMPRESSION* | *COMPRESSION SPRING* | *Ø12,5 FILØ1,8 LG50MM* | *2* | *2326000660* | |
| *5* | *CÂBLE* | | | *1* | *155P241600* | |
| *6* | *VIS SPÉCIALE* | | *CHC M6X20-20 S020312* | *1* | *2700100670* | |
| *7* | *RONDELLE CONIQUE STRIÉE* | *RIDGED CONICAL DISC* | *M 6 ZB* | *16* | *2351902840* | |
| *8* | *ECROU AUTOFREINÉ* | | *H FR M6 CL. 8 ZB* | *2* | *2349221490* | |
| *9* | *RONDELLE PLATE* | *FLAT WASHER* | *L 6 ZB* | *2* | *2351123050* | |

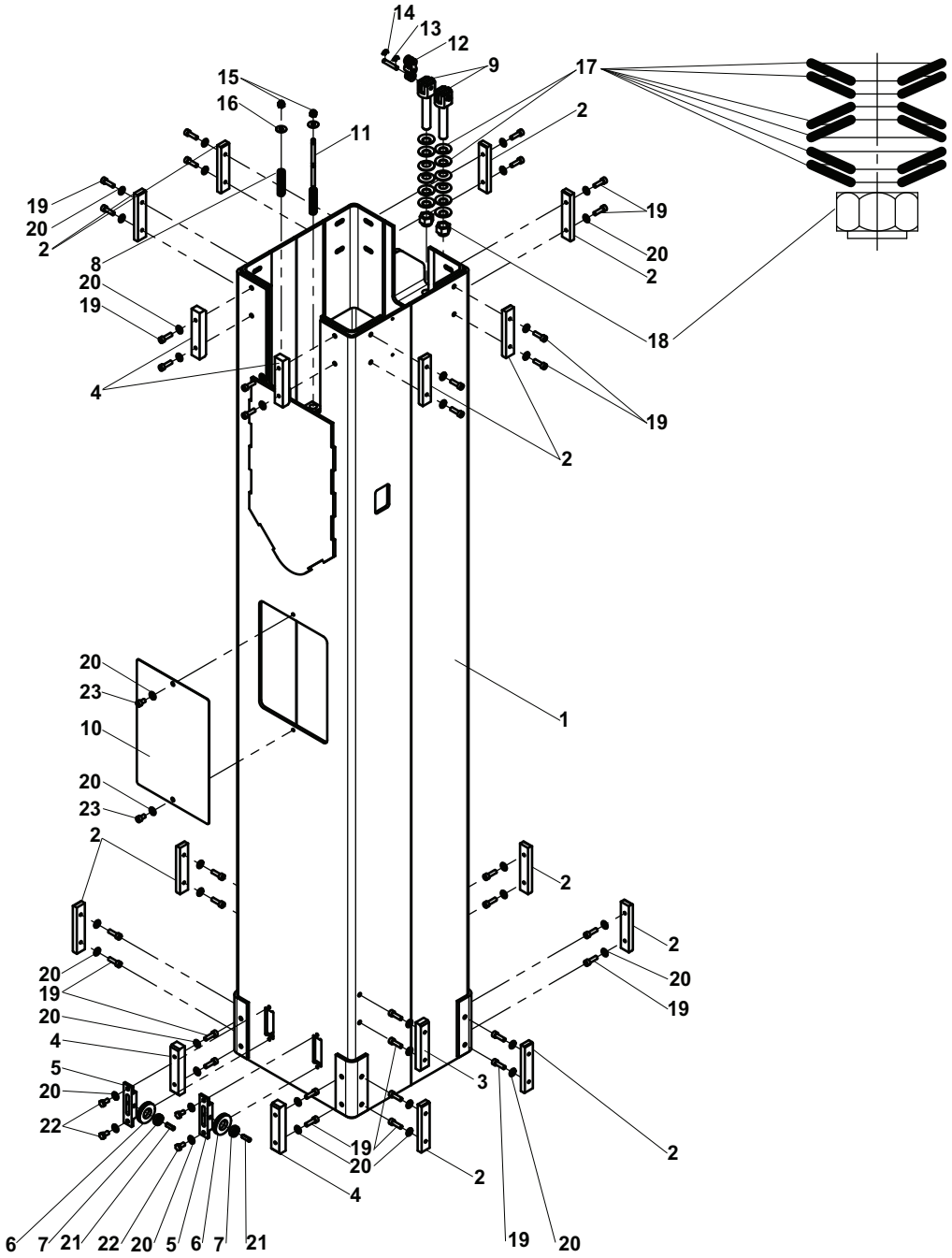


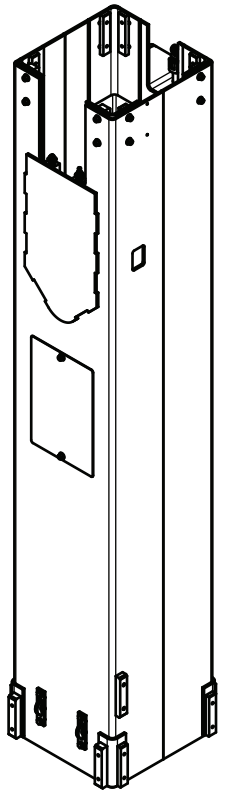

155P261310.B

## ▲ CAISSON N°1
## BOX N°1



| Rep. | Désignation | Designation | Specification | Qty | Code | Up to / jusqu'à |
|---|---|---|---|---|---|---|
| 1 | CAISSON | BOX | N°1 | 1 | 155P261300 | |
| 2 | PATIN DE GUIDAGE | GUIDE PAD | 100X20 EP 10MM | 12 | 103D164340 | |
| 3 | PATIN DE GUIDAGE | GUIDE PAD | 100X20 EP 13MM | 1 | 155P231650 | |
| 4 | PATIN DE GUIDAGE | GUIDE PAD | 100X20 EP 16MM | 4 | 155P233300 | |
| 5 | SUPPORT POULIE | PULLEY SUPPORT | A CABLE | 2 | 155P231710 | |
| 6 | POULIE À CÂBLE | | | 2 | 113D170200 | |
| 7 | ROULEMENT | BEARING | 626 ZZ | 2 | 2451930160 | |
| 8 | RESSORT DE COMPRESSION | COMPRESSION SPRING | Ø12,5 FILØ1,8 LG50MM | 2 | 2326000660 | |
| 9 | CHAPE DE CHAÎNE | | LH10-44 | 2 | 155P231610 | |
| 10 | TRAPPE D'ACCÈS | ACCESS FLAP | AR CAISSON N°1 | 1 | 155P23372 0 | |
| 11 | CÂBLE | | | 1 | 155P241600 | |
| 12 | CHAÎNE | CHAIN | | 1 | 2323000050 | |
| 13 | AXE DE CHAÎNE | | LH10-44 | 2 | 2323000080 | |
| 14 | GOUPILLE | PIN | V Ø1,6 X 20 NF | 4 | 2352111790 | |
| 15 | ECROU AUTOFREINÉ | | H FR M6 CL. 8 ZB | 2 | 2349221490 | |
| 16 | RONDELLE PLATE | FLAT WASHER | L 6 ZB | 2 | 2351123050 | |
| 17 | RONDELLE RESSORT CONIQUE | CONICAL SPRING WASHER | 14,2-28-1,5 DC | 12 | 2351402170 | |
| 18 | ECROU AUTOFREINÉ | | H FR M14 CL. 8 ZB | 2 | 2349221530 | |
| 19 | VIS SPÉCIALE | | CHC M6X20-20 S020312 | 1 | 2700100670 | |
| 20 | RONDELLE CONIQUE STRIÉE | RIDGED CONICAL DISC | M 6 ZB | 40 | 2351902840 | |
| 21 | GOUPILLE ÉLASTIQUE | FLEXIBLE PIN | E 6-18 DC | 1 | 2701100180 | |
| 22 | VIS | SCREW | H M6X12-12 CL.8.8 ZB | 4 | 2301235830 | |
| 23 | VIS | SCREW | CHC M6X10-10 CL.8,8 ZB | 2 | 2308231460 | |
| | | | | | | |
| | | | | | | |
| | | | | | | |

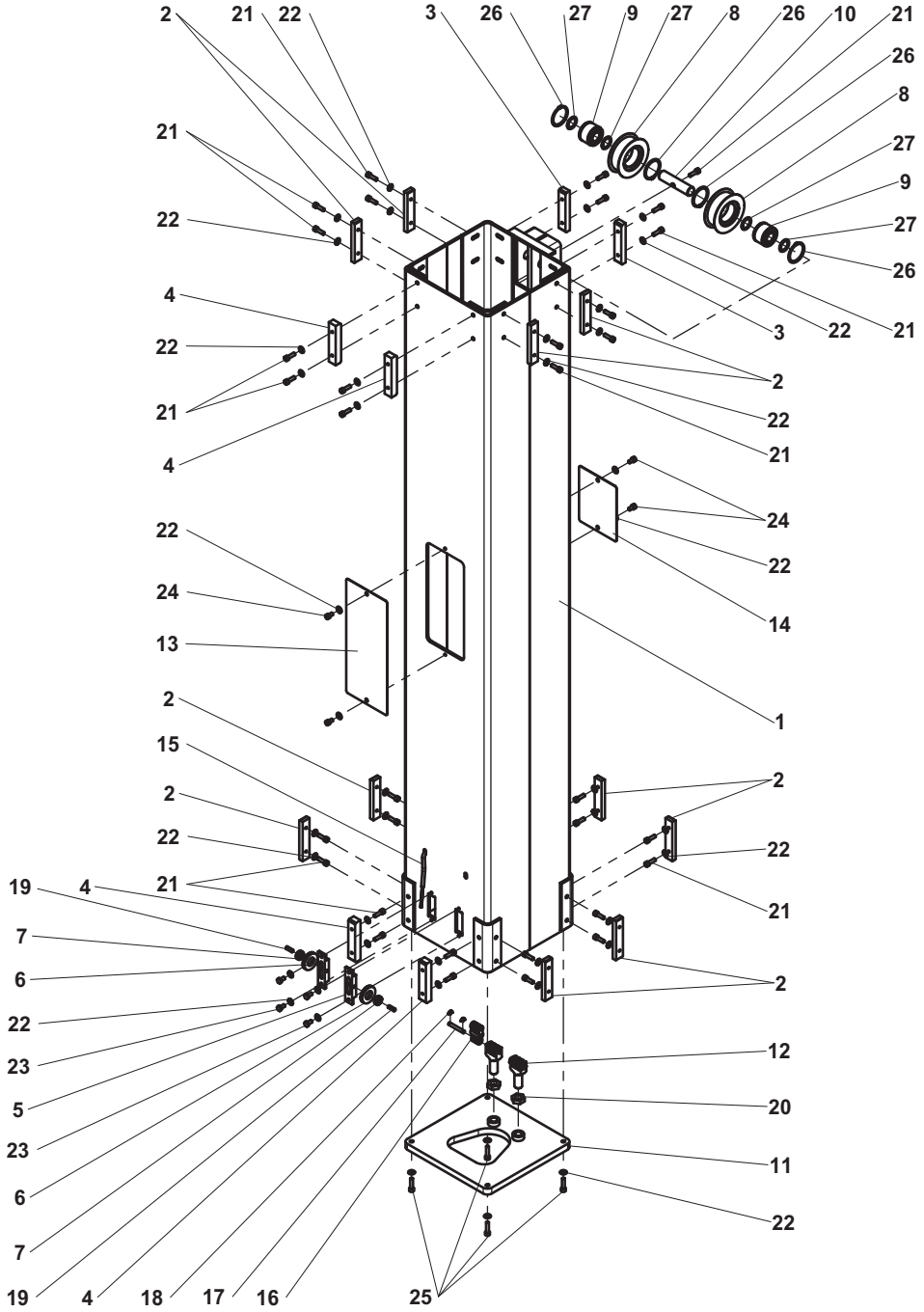


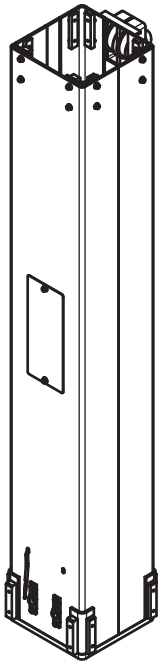

155P256550.B

## ▲ CAISSON N°2
## BOX N°2



| Rep. | Désignation | Designation | Specification | Qty | Code | Up to / jusqu'à |
|---|---|---|---|---|---|---|
| 1 | CAISSON | BOX | N°2 | 1 | 155P256580 | |
| 2 | PATIN DE GUIDAGE | GUIDE PAD | 100X20 EP 10MM | 10 | 103D164340 | |
| 3 | PATIN DE GUIDAGE | GUIDE PAD | 100X20 EP 13MM | 2 | 155P231650 | |
| 4 | PATIN DE GUIDAGE | GUIDE PAD | 100X20 EP 16MM | 4 | 155P233300 | |
| 5 | SUPPORT POULIE | PULLEY SUPPORT | | 2 | 155P231710 | |
| 6 | POULIE À CÂBLE | | | 2 | 113D170200 | |
| 7 | ROULEMENT | BEARING | 626 ZZ | 2 | 2451930160 | |
| 8 | POULIE | PULLEY | LH10-44 | 2 | 155P231660 | |
| 9 | ROULEMENT ROULEAUX CYL. | CYL. ROLLER BEARING | | 2 | 2701000040 | |
| 10 | AXE DE POULIE | PULLEY PIN | Ø20 LG 85MM | 1 | 155P231520 | |
| 11 | EMBASE | BASE | N°2 | 1 | 155P233320 | |
| 12 | CHAPE DE CHAÎNE | | LH10-66 | 2 | 103C160060 | |
| 13 | TRAPPE D'ACCÈS | ACCESS FLAP | N°2 | 1 | 155P233710 | |
| 14 | TRAPPE D'ACCÈS | ACCESS FLAP | N°2 | 1 | 155P233700 | |
| 15 | CÂBLE | | DE RAPPEL Ø3 | 1 | 155P241600 | |
| 16 | CHAÎNE | CHAIN | S6047 | 1 | 2323000040 | |
| 17 | AXE DE CHAÎNE | | LH10-66 | 2 | 2323000090 | |
| 18 | GOUPILLE | PIN | V Ø1,6 X 20 NF | 4 | 2352111790 | |
| 19 | GOUPILLE ÉLASTIQUE | FLEXIBLE PIN | E 6-18 DC | 1 | 2701100180 | |
| 20 | ECROU BAS | THIN NUT | HM M16 CL. 4 ZB | 2 | 2341222070 | |
| 21 | VIS SPÉCIALE | | CHC M6X20-20 S020312 | 1 | 2700100670 | |
| 22 | RONDELLE CONIQUE STRIÉE | RIDGED CONICAL DISC | M 6 ZB | 44 | 2351902840 | |
| 24 | VIS | SCREW | H M6X12-12 CL.8.8 ZB | 4 | 2301235830 | |
| 25 | VIS | SCREW | CHC M6X10-10 CL.8,8 ZB | 4 | 2308231460 | |
| 26 | VIS | SCREW | CHC M6X25-25 CL.8,8 ZB | 4 | 2308231500 | |
| 27 | RONDELLE D'AJUSTAGE | ADJUSTING WASHER | Ø20X28-1,0 BRUT | 4 | 2700500080 | |

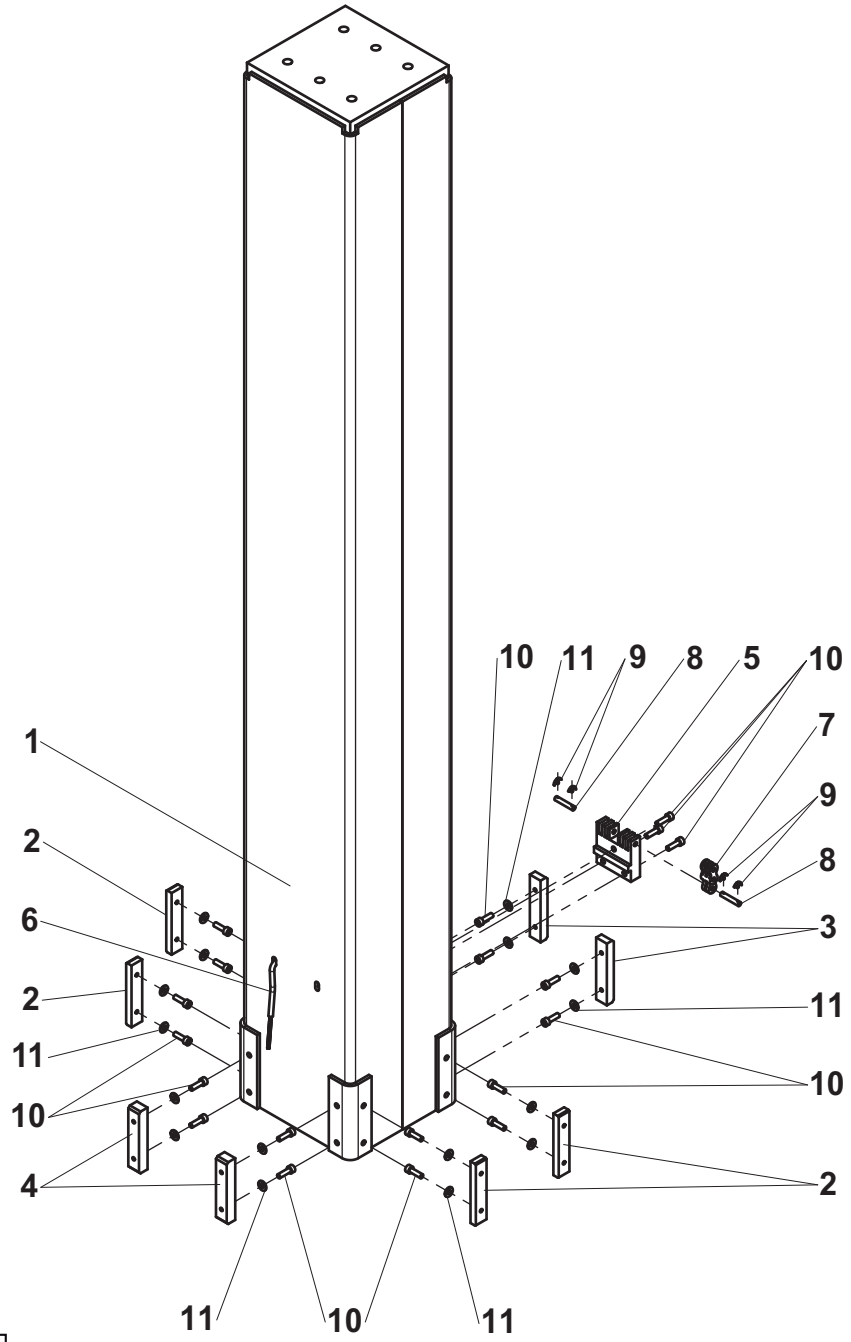


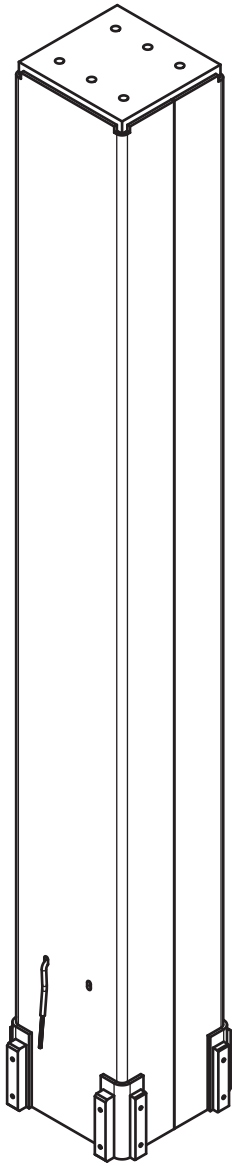

155P245550.D

## ▲ CAISSON N°3
## BOX N°3



| Rep. | Désignation | Designation | Specification | Qty | Code | Up to / jusqu'à |
|---|---|---|---|---|---|---|
| 1 | CAISSON | BOX | N°3 | 1 | 155P245560 | |
| 2 | PATIN DE GUIDAGE | GUIDE PAD | 100X20 EP 10MM | 4 | 103D164340 | |
| 3 | PATIN DE GUIDAGE | GUIDE PAD | 100X20 EP 13MM | 2 | 155P231650 | |
| 4 | PATIN DE GUIDAGE | GUIDE PAD | 100X20 EP 16MM | 2 | 155P233300 | |
| 5 | PEIGNE FIXE POUR CHAINE | FIXED COMB FOR CHAIN | LH10-44 | 1 | 155P231550 | |
| 6 | CÂBLE | | Ø3 | 1 | 155P241600 | |
| 7 | CHAÎNE | CHAIN | | 1 | 2323000050 | |
| 8 | AXE DE CHAÎNE | | LH10-44 | 2 | 2323000080 | |
| 9 | GOUPILLE | PIN | V Ø1,6 X 20 NF | 4 | 2352111790 | |
| 10 | VIS SPÉCIALE | | CHC M6X20-20 S020312 | 1 | 2700100670 | |
| 11 | RONDELLE CONIQUE STRIÉE | RIDGED CONICAL DISC | M 6 ZB | 16 | 2351902840 | |

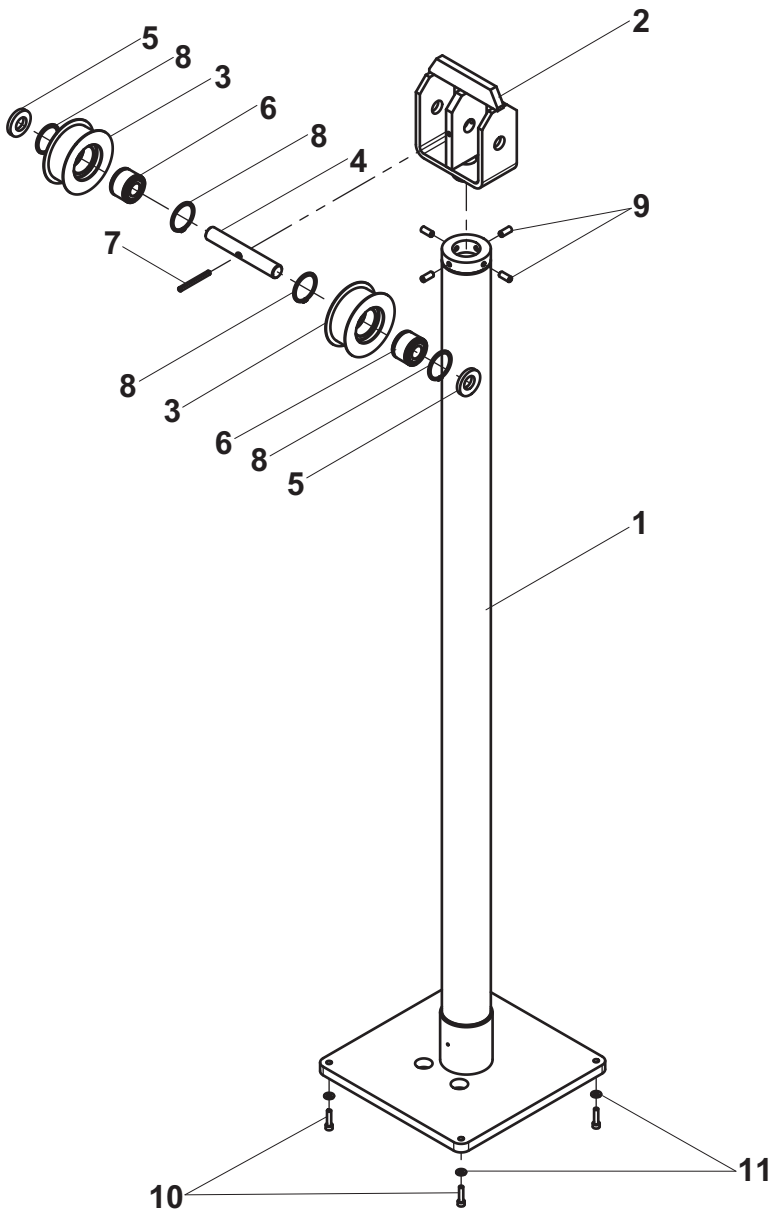


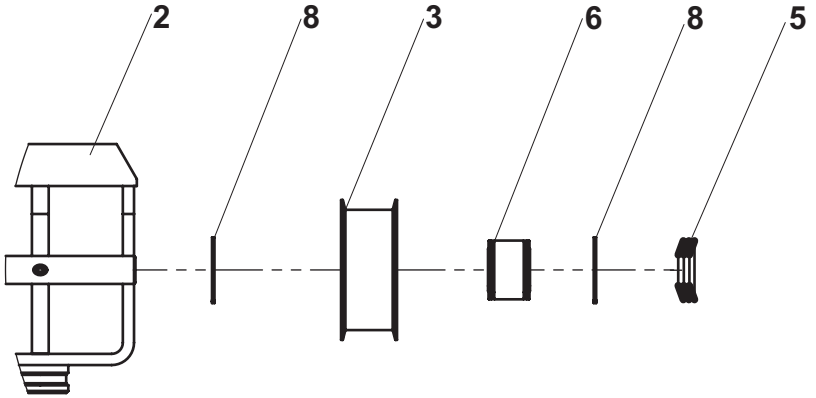


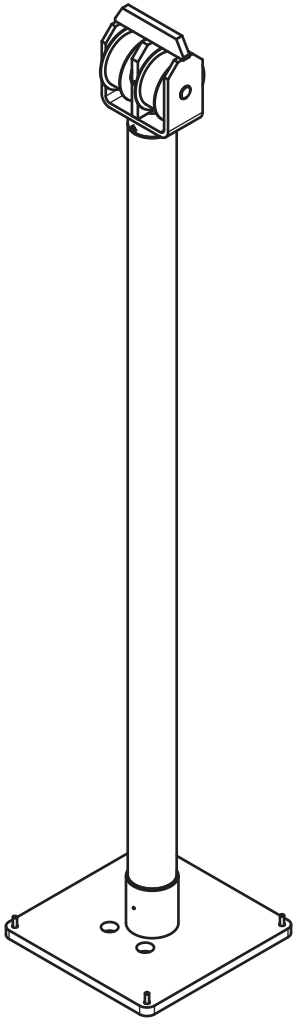

155P245810.H

# ▲ *VÉRIN DE LEVAGE*
# *LIFT CYLINDER*



| Rep. | Désignation | Designation | Specification | Qty | Code | Up to / jusqu'à |
|---|---|---|---|---|---|---|
| ***1*** | ***VÉRIN DE LEVAGE*** | ***LIFT CYLINDER*** | | ***1*** | ***155P254560*** | ***SEE DETAILS*** |
| *2* | *PORTE POULIE* | *PULLEY SUPPORT* | *LH10-66* | *1* | *155P233340* | |
| *3* | *POULIE* | *PULLEY* | *LH10-66* | *2* | *155P231740* | |
| *4* | *AXE DE POULIE* | *PULLEY PIN* | *Ø20 LG 136MM* | *1* | *155P231540* | |
| *5* | *RONDELLE* | *WASHER* | *TREP 4L Ø20 ZB* | *4* | *2351901290* | |
| *6* | *ROULEMENT ROULEAUX CYL.* | *CYL. ROLLER BEARING* | *2 RANGÉES - Ø20/42-30* | *2* | *2701000040* | |
| *7* | *GOUPILLE ÉLASTIQUE* | *FLEXIBLE PIN* | *E 6-60 DC* | *1* | *2352216330* | |
| *8* | *ANNEAU ÉLASTIQUE ARBRE* | | *42X1,75 DC* | *1* | *2700900030* | |
| *9* | *VIS À BOUT CUVETTE* | | *HC M8-20-45H ZB* | *4* | *2316331690* | |
| *10* | *VIS* | *SCREW* | *CHC M6X25-25 CL.8,8 ZB* | *4* | *2308231500* | |
| *11* | *RONDELLE CONIQUE STRIÉE* | *RIDGED CONICAL DISC* | *M 6 ZB* | *4* | *2351902840* | |

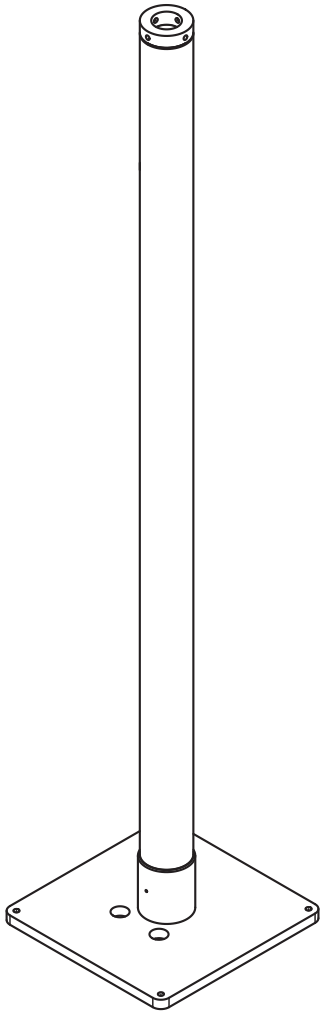

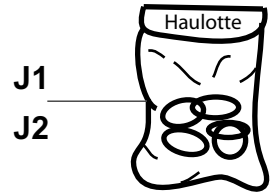


155P254560.C

## ▲ *VÉRIN DE LEVAGE*
## *LIFT CYLINDER*



| Rep. | Désignation | Designation | Specification | Qty | Code | Up to / jusqu'à |
|---|---|---|---|---|---|---|
| *J1* | *POCHETTE DE JOINTS* | *SEAL KIT* | | *1* | *2504000910* | |
| *J2* | *POCHETTE DE JOINTS* | *SEAL KIT* | | *1* | *2505005180* | |

**J1**

**J2**

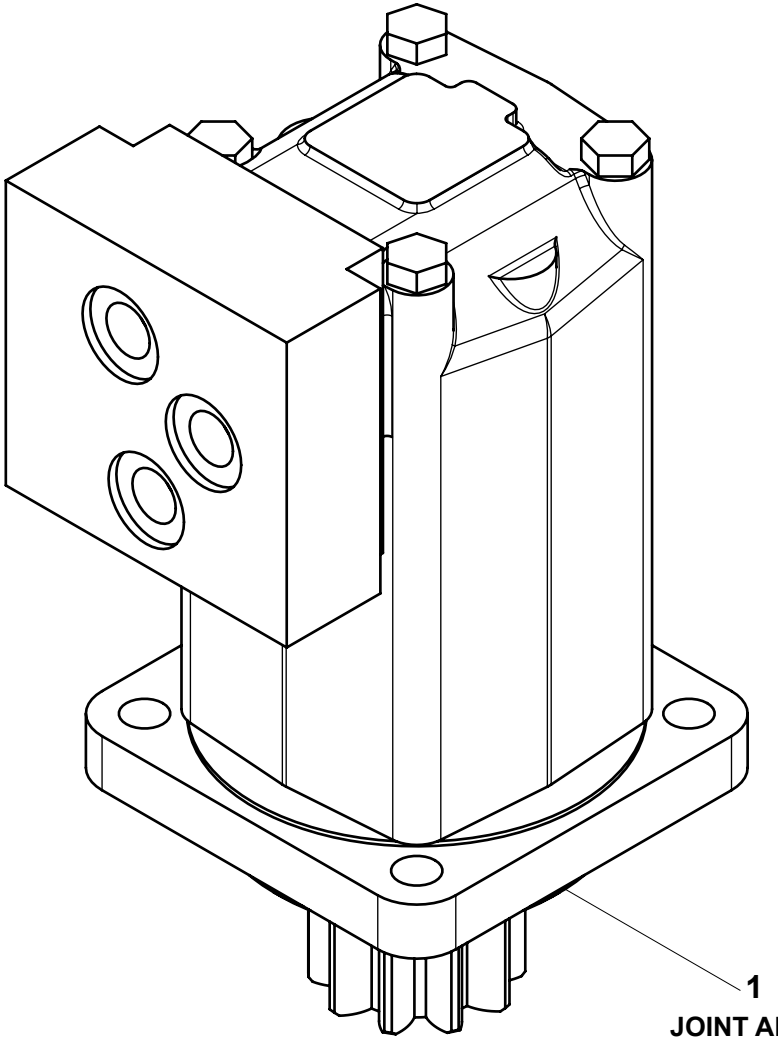

**1**

**JOINT ARBRE /**
*SHAFT SEAL*

2431203430.A

# ▲ *MOTEUR ORIENTATION*
# *SLEWING MOTOR*



| Rep. | Désignation | Designation | Specification | Qty | Code | Up to / jusqu'à |
|---|---|---|---|---|---|---|
| *J* | *JOINT ARBRE* | *SHAFT SEAL* | *VERSION 1* | *1* | *2505004560* | |
| *J1* | *POCHETTE DE JOINTS* | *SEAL KIT* | *VERSION 1* | *1* | *2421693530* | |
| *J2* | *POCHETTE DE JOINTS* | *SEAL KIT* | *VERSION 2* | *1* | *2505007440* | |

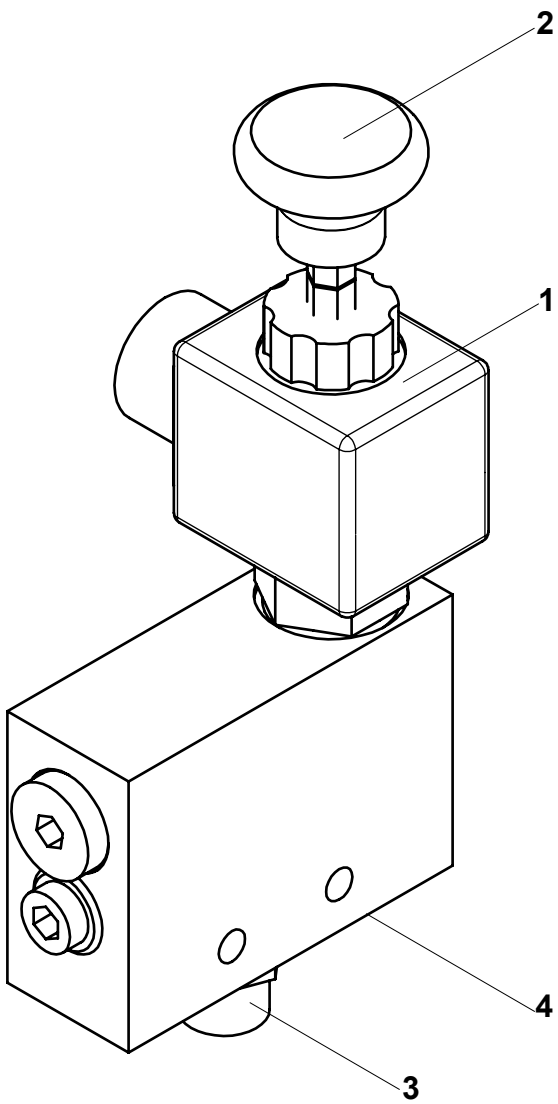


155P246690.B

## ▲ *BLOC DESC. SECOURS*
## *EMERGENCY LOW. UNIT*



| Rep. | Désignation | Designation | Specification | Qty | Code | Up to / jusqu'à |
|---|---|---|---|---|---|---|
| *1* | *BOBINE* | *COIL* | | *1* | *2440210850* | |
| *2* | *MOLETTE* | | | *1* | *2503002540* | |
| *3* | *UNION MÂLE* | | | *1* | *2420104800* | |
| *4* | *UNION MÂLE* | | | *1* | *2505004200* | |
| | | | | | | |
| | | | | | | |
| | | | | | | |
| | | | | | | |
| | | | | | | |
| | | | | | | |
| | | | | | | |
| | | | | | | |
| | | | | | | |
| | | | | | | |
| | | | | | | |
| | | | | | | |
| | | | | | | |
| | | | | | | |
| | | | | | | |
| | | | | | | |
| | | | | | | |
| | | | | | | |
| | | | | | | |
| | | | | | | |
| | | | | | | |

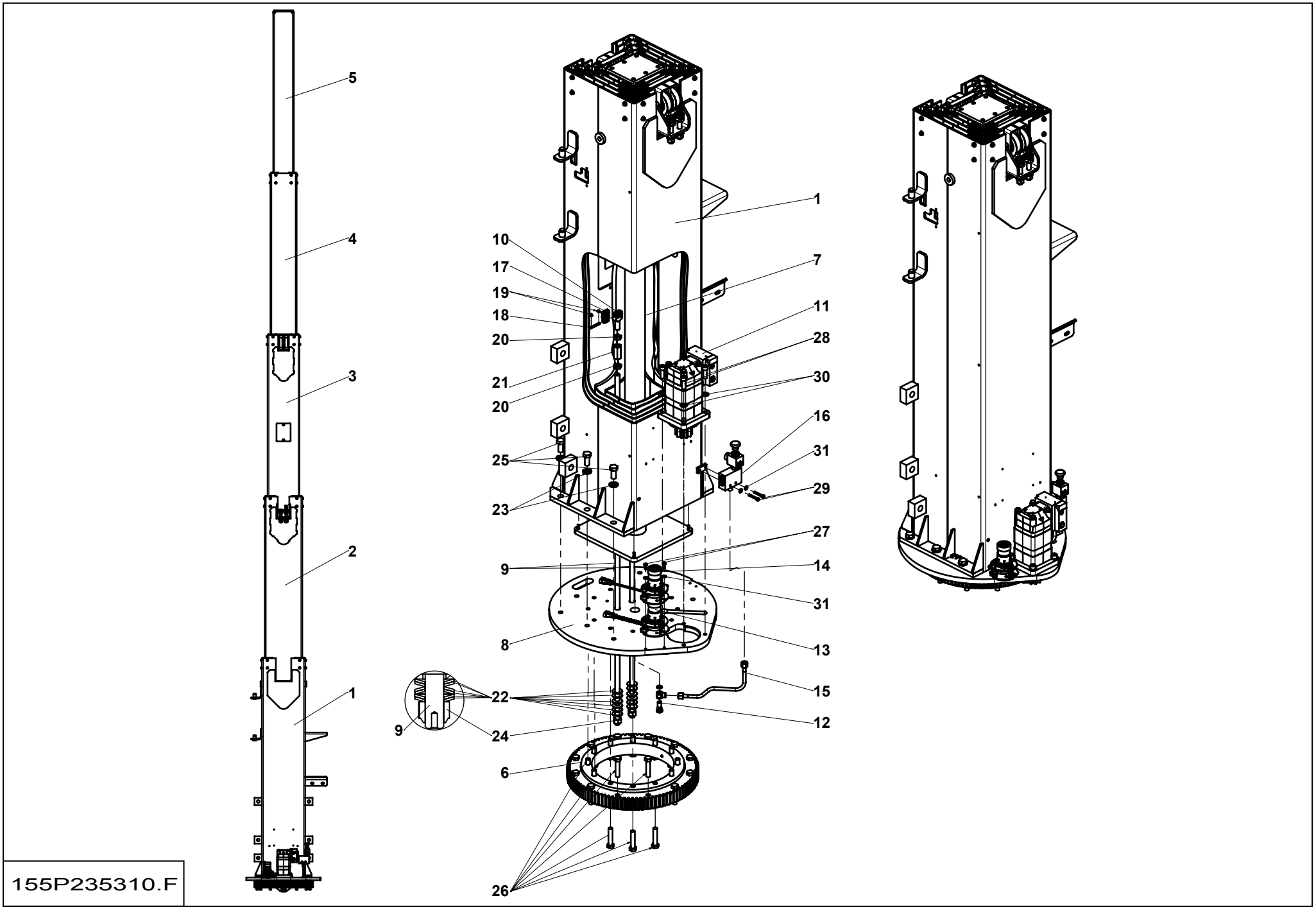


155P235310.F

# MÂT TÉLESCOPIQUE 10 METRES - STAR 10 (26J)
# TELESCOPIC MAST 10 METERS - STAR 10 (26J)



| Rep. | Désignation | Designation | Specification | Qty | Code | Up to / jusqu'à |
|---|---|---|---|---|---|---|
| **1** | **PIED DE MAT** | **MAST FOOT** | | **1** | **155P280980** | **SEE DETAILS** |
| **2** | **CAISSON** | **BOX** | **N°1** | **1** | **155P245790** | **SEE DETAILS** |
| **3** | **CAISSON** | **BOX** | **N°2** | **1** | **155P245750** | **SEE DETAILS** |
| **4** | **CAISSON** | **BOX** | **N°3** | **1** | **155P245740** | **SEE DETAILS** |
| **5** | **CAISSON** | **BOX** | **N°4** | **1** | **155P245710** | **SEE DETAILS** |
| 6 | COURONNE D'ORIENTATION | SLEW RING | | 1 | 2420311700 | |
| **7** | **VÉRIN DE LEVAGE** | **LIFT CYLINDER** | | **1** | **155P245810** | **SEE DETAILS** |
| 8 | PLATINE | PLATE | | 1 | 155P233680 | |
| 9 | TIRANT | TIE ROD | | 2 | 155P231730 | |
| 10 | CHAPE DE CHAÎNE | | | 2 | 103C160060 | |
| **11** | **MOTEUR ORIENTATION** | **SLEWING MOTOR** | | **1** | **2431203430** | **SEE DETAILS** |
| 12 | RACCORD | FITTING | | 1 | 2501000980 | |
| 13 | DÉVERS | TILT | VERSION CE | 1 | 118C153260 | **STAR 8/10** |
| 14 | DÉVERS | TILT | VERSION US | 1 | 2901016260 | **STAR 22/26J** |
| 15 | TUBE HYDRAULIQUE | HYDRAULIC TUBE | | 1 | 155P235710 | |
| **16** | **BLOC DESC. SECOURS** | **EMERGENCY LOW. UNIT** | | **1** | **155P246690** | **SEE DETAILS** |
| 17 | CHAÎNE | CHAIN | S6047 | 1 | 2323000040 | |
| 18 | AXE DE CHAÎNE | | | 2 | 2323000090 | |
| 19 | GOUPILLE | PIN | V Ø1,6 X 20 NF | 4 | 2352111790 | |
| 20 | ECROU BAS | THIN NUT | HM M16 CL. 4 ZB | 4 | 2341222070 | |
| 21 | ECROU | NUT | | 2 | 2349223100 | |
| 22 | RONDELLE RESSORT CONIQUE | CONICAL SPRING WASHER | 16,3-34-2 DC | 12 | 2351402180 | |
| 23 | ENTRETOISE | BRACE | | 8 | 126D162220 | |
| 24 | ECROU AUTOFREINÉ | | H FR M16 CL. 8 ZB | 2 | 2349221540 | |
| 25 | VIS | SCREW | H M16X35-35 CL.8.8 ZB | 1 | 2331232210 | |
| 26 | VIS | SCREW | H M14X65-34 CL.8.8 ZB | 24 | 2301232420 | |

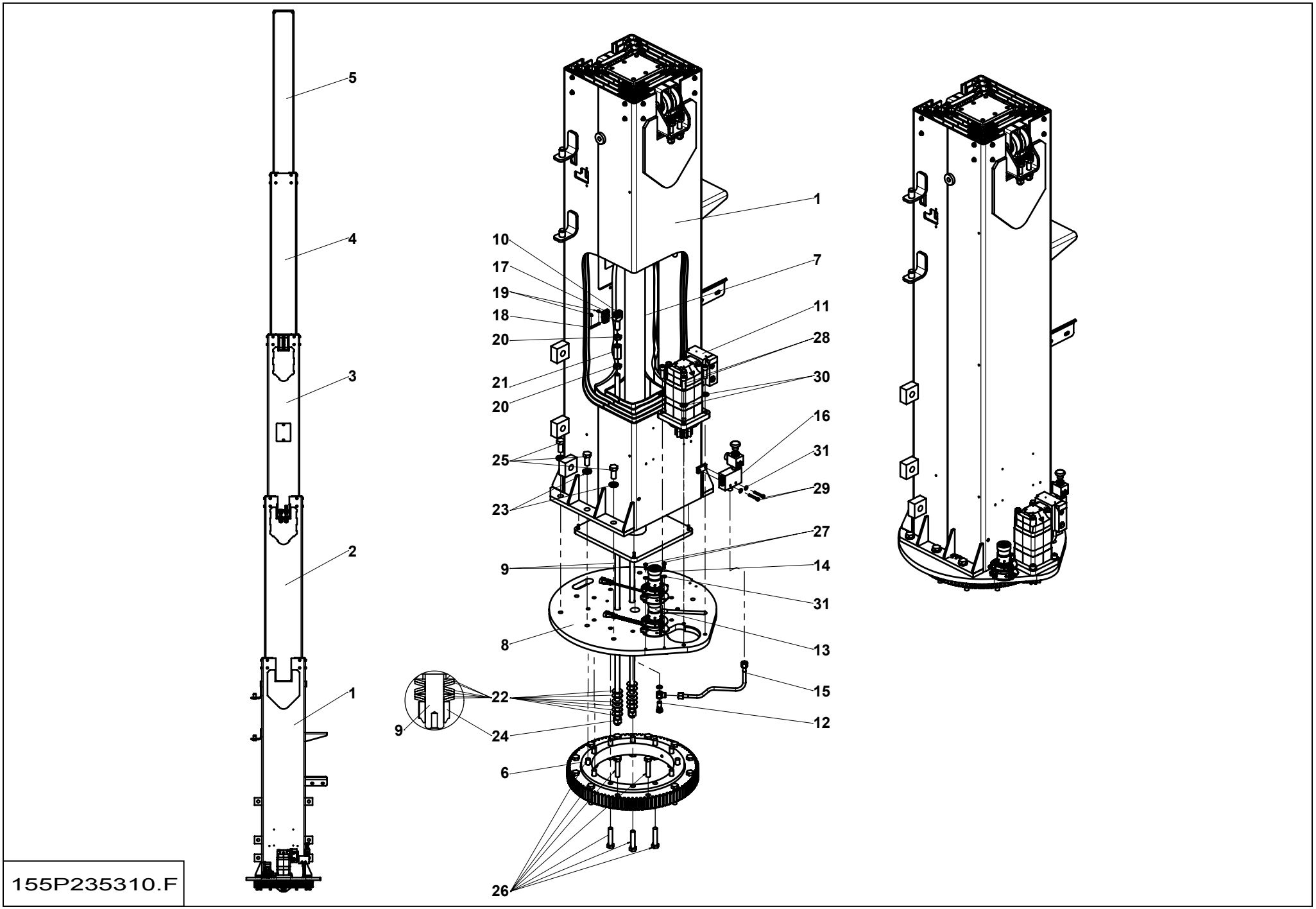


155P235310.F

# ▲ MÂT TÉLESCOPIQUE 10 METRES - STAR 10 (26J)
# TELESCOPIC MAST 10 METERS - STAR 10 (26J)



| Rep. | Désignation | Designation | Specification | Qty | Code | Up to / jusqu'à |
|---|---|---|---|---|---|---|
| 27 | VIS | SCREW | H M6X16-16 CL.8.8 ZB | 2 | 2331231310 | |
| 28 | VIS | SCREW | CHC M12X35-35 CL.8.8 ZB | 4 | 2308232120 | |
| 29 | VIS | SCREW | CHC M6X40-24 CL.8,8 ZB | 2 | 2308231530 | |
| 30 | RONDELLE PLATE | PLAT WASHER | Z 12 ZB | 4 | 2351111080 | |
| 31 | RONDELLE CONIQUE STRIÉE | RIDGED CONICAL DISC | M 6 ZB | 2 | 2351902840 | |

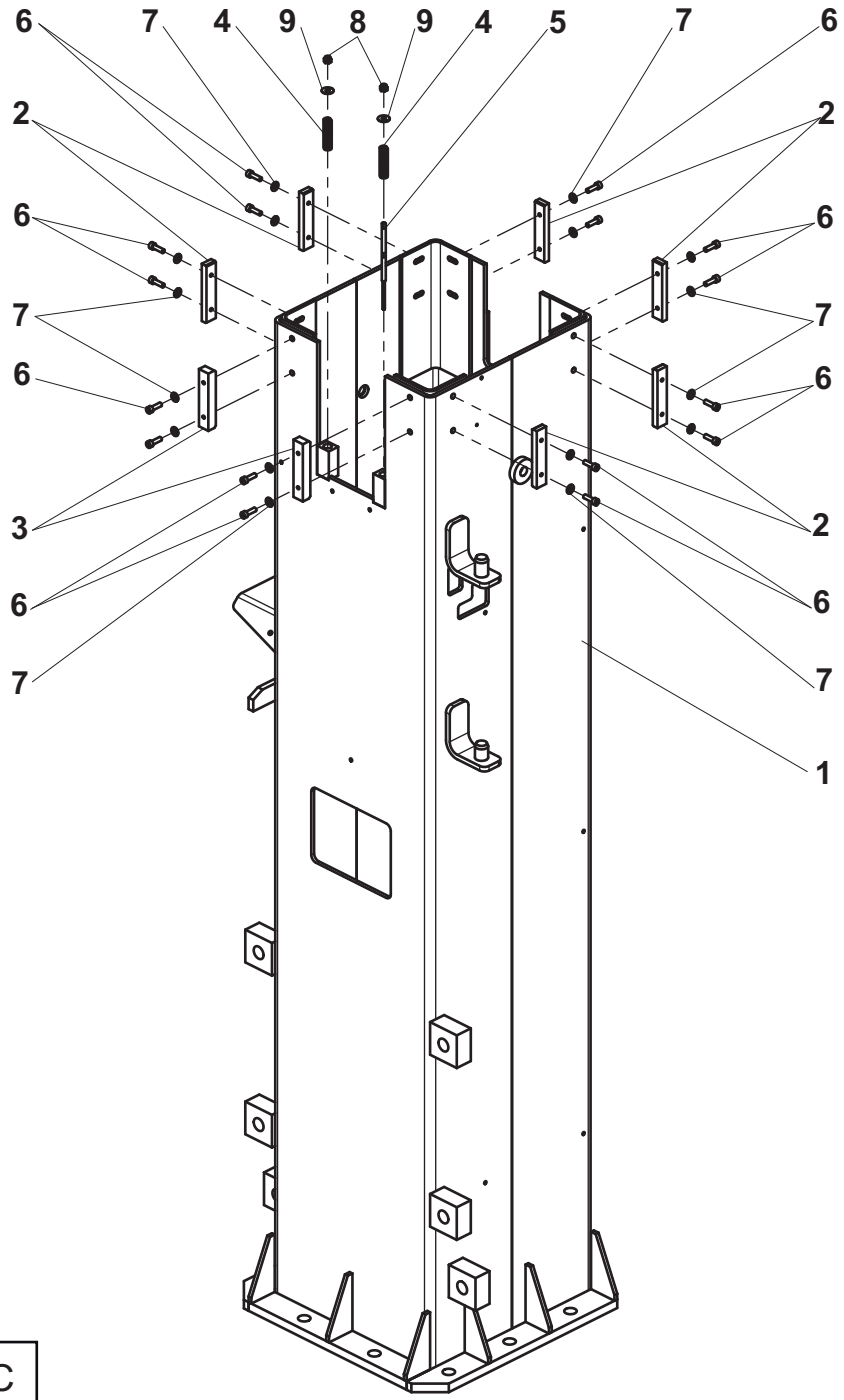


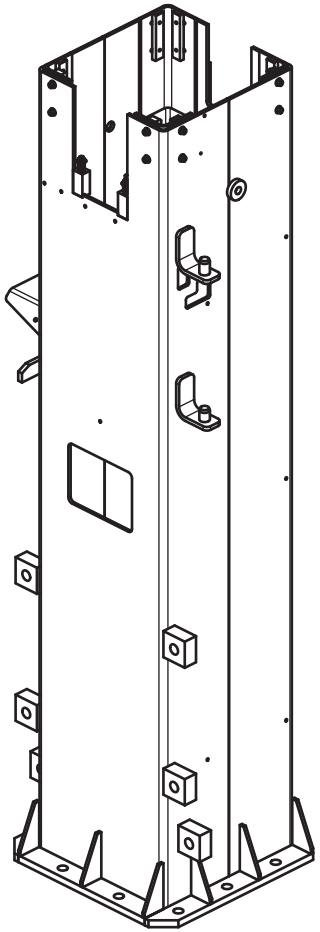

155P280980.C

# ▲ *PIED DE MAT*
# *MAST FOOT*



| Rep. | Désignation | Designation | Specification | Qty | Code | Up to / jusqu'à |
|---|---|---|---|---|---|---|
| *1* | *PIED DE MAT* | *MAST FOOT* | | *1* | *155P271390* | |
| *2* | *PATIN DE GUIDAGE* | *GUIDE PAD* | *100X20 EP 10MM* | *6* | *103D164340* | |
| *3* | *PATIN DE GUIDAGE* | *GUIDE PAD* | *100X20 EP 16MM* | *2* | *155P233300* | |
| *4* | *RESSORT DE COMPRESSION* | *COMPRESSION SPRING* | *Ø12,5 FILØ1,8 LG50MM* | *2* | *2326000660* | |
| *5* | *CÂBLE* | | | *1* | *155P241600* | |
| *6* | *VIS SPÉCIALE* | | *CHC M6X20-20 S020312* | *1* | *2700100670* | |
| *7* | *RONDELLE CONIQUE STRIÉE* | *RIDGED CONICAL DISC* | *M 6 ZB* | *16* | *2351902840* | |
| *8* | *ECROU AUTOFREINÉ* | | *H FR M6 CL. 8 ZB* | *2* | *2349221490* | |
| *9* | *RONDELLE PLATE* | *FLAT WASHER* | *L 6 ZB* | *2* | *2351123050* | |

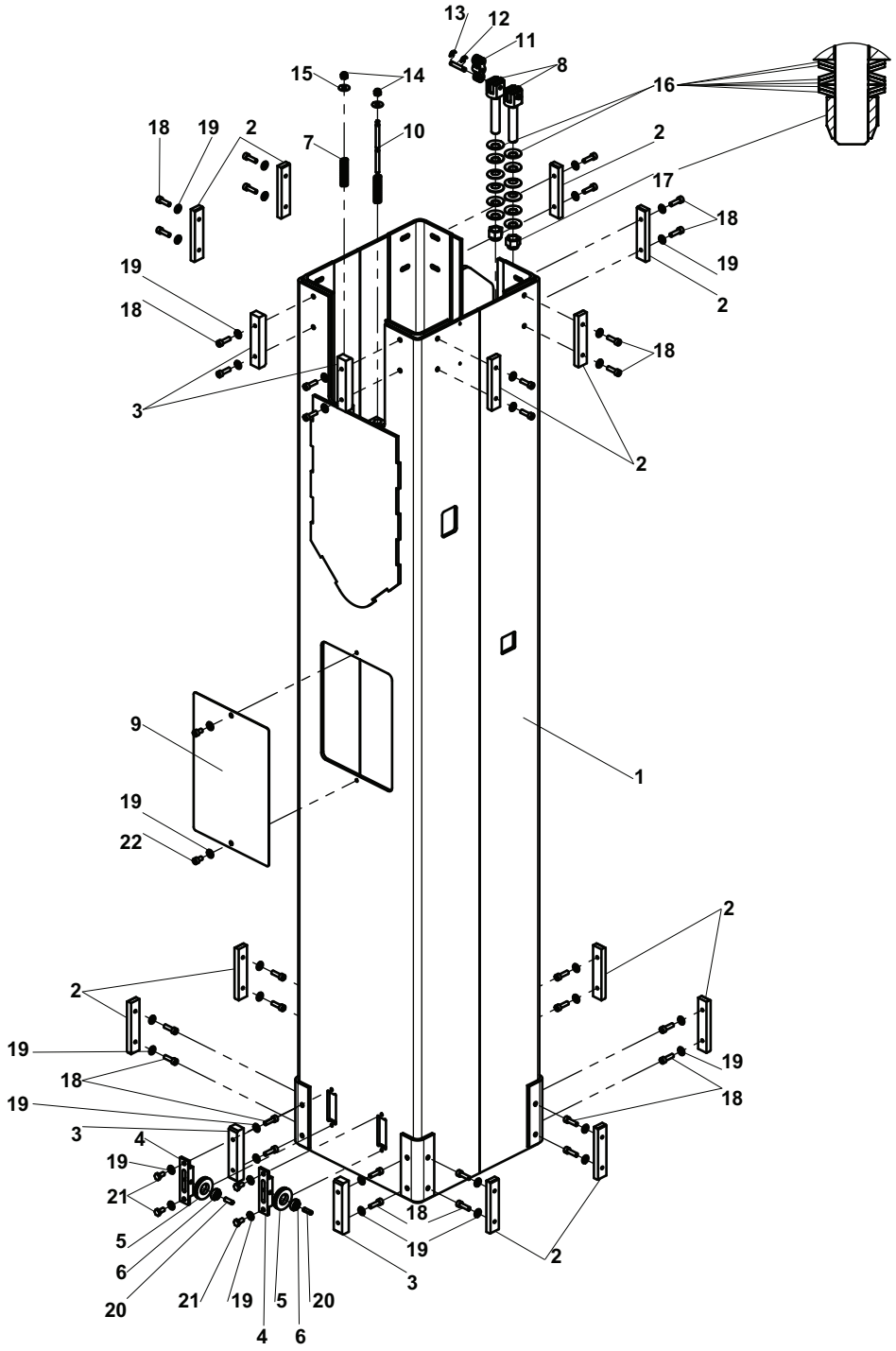


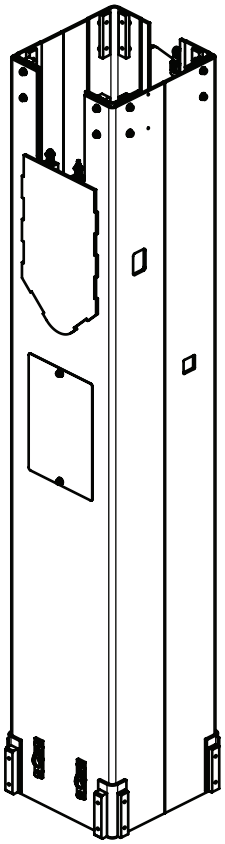

155P245790.E

## ▲ CAISSON N°1
## BOX N°1

◀ C-26B-2 ▶

| Rep. | Désignation | Designation | Specification | Qty | Code | Up to / jusqu'à |
|---|---|---|---|---|---|---|
| 1 | CAISSON | BOX | N°1 | 1 | 155P231560 | |
| 2 | PATIN DE GUIDAGE | GUIDE PAD | 100X20 EP 10MM | 12 | 103D164340 | |
| 3 | PATIN DE GUIDAGE | GUIDE PAD | 100X20 EP 16MM | 4 | 155P233300 | |
| 4 | SUPPORT POULIE | PULLEY SUPPORT | | 2 | 155P231710 | |
| 5 | POULIE À CÂBLE | | | 2 | 113D170200 | |
| 6 | ROULEMENT | BEARING | 626 ZZ | 2 | 2451930160 | |
| 7 | RESSORT DE COMPRESSION | COMPRESSION SPRING | Ø12,5 FILØ1,8 LG50MM | 2 | 2326000660 | |
| 8 | CHAPE DE CHAÎNE | | | 2 | 155P231610 | |
| 9 | TRAPPE D'ACCÈS | ACCESS FLAP | | 1 | 155P233720 | |
| 10 | CÂBLE | | | 1 | 155P241600 | |
| 11 | CHAÎNE | CHAIN | | 1 | 2323000050 | |
| 12 | AXE DE CHAÎNE | | LH10-44 | 2 | 2323000080 | |
| 13 | GOUPILLE | PIN | V Ø1,6 X 20 NF | 4 | 2352111790 | |
| 14 | ECROU AUTOFREINÉ | | H FR M6 CL. 8 ZB | 2 | 2349221490 | |
| 15 | RONDELLE PLATE | FLAT WASHER | L 6 ZB | 2 | 2351123050 | |
| 16 | RONDELLE RESSORT CONIQUE | CONICAL SPRING WASHER | 14,2-28-1,5 DC | 12 | 2351402170 | |
| 17 | ECROU AUTOFREINÉ | | H FR M14 CL. 8 ZB | 2 | 2349221530 | |
| 18 | VIS SPÉCIALE | | CHC M6X20-20 S020312 | 1 | 2700100670 | |
| 19 | RONDELLE CONIQUE STRIÉE | RIDGED CONICAL DISC | M 6 ZB | 38 | 2351902840 | |
| 20 | GOUPILLE ÉLASTIQUE | FLEXIBLE PIN | E 6-18 DC | 1 | 2701100180 | |
| 21 | VIS | SCREW | H M6X12-12 CL.8.8 ZB | 4 | 2301235830 | |
| 22 | VIS | SCREW | CHC M6X10-10 CL.8,8 ZB | 2 | 2308231460 | |
| | | | | | | |
| | | | | | | |
| | | | | | | |
| | | | | | | |

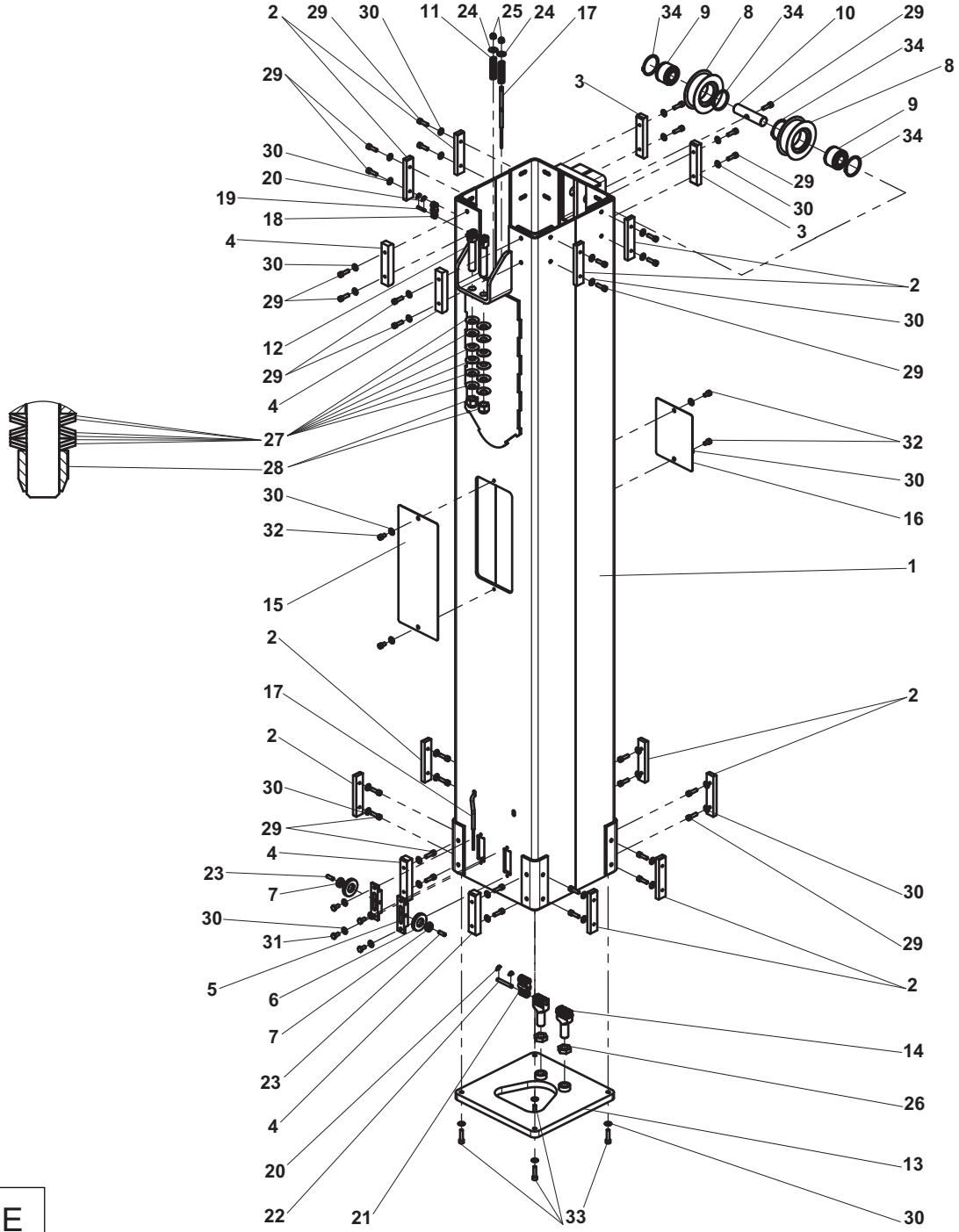


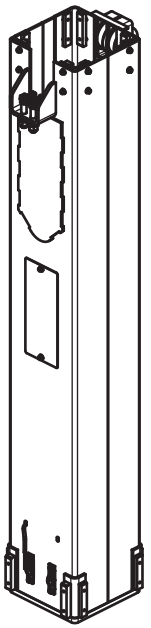

155P245750.E

# ▲ CAISSON N°2
# BOX N°2



| Rep. | Désignation | Designation | Specification | Qty | Code | Up to / jusqu'à |
|---|---|---|---|---|---|---|
| 1 | CAISSON | BOX | N°2 | 1 | 155P231810 | |
| 2 | PATIN DE GUIDAGE | GUIDE PAD | 100X20 EP 10MM | 10 | 103D164340 | |
| 3 | PATIN DE GUIDAGE | GUIDE PAD | 100X20 EP 13MM | 1 | 155P231650 | |
| 4 | PATIN DE GUIDAGE | GUIDE PAD | 100X20 EP 16MM | 4 | 155P233300 | |
| 5 | SUPPORT POULIE | PULLEY SUPPORT | | 2 | 155P231710 | |
| 6 | POULIE À CÂBLE | | | 2 | 113D170200 | |
| 7 | ROULEMENT | BEARING | 626 ZZ | 2 | 2451930160 | |
| 8 | POULIE | PULLEY | LH10-44 | 2 | 155P231660 | |
| 9 | ROULEMENT ROULEAUX CYL. | CYL. ROLLER BEARING | | 2 | 2701000040 | |
| 10 | AXE DE POULIE | PULLEY PIN | Ø20 LG 83MM | 1 | 155P231520 | |
| 11 | RESSORT DE COMPRESSION | COMPRESSION SPRING | Ø12,5 FILØ1,8 LG50MM | 2 | 2326000660 | |
| 12 | CHAPE DE CHAÎNE | | LL08-44 | 1 | 155P231720 | |
| 13 | EMBASE | BASE | | 1 | 155P233320 | |
| 14 | CHAPE DE CHAÎNE | | LH10-66 | 2 | 103C160060 | |
| 15 | TRAPPE D'ACCÈS | ACCESS FLAP | | 1 | 155P233710 | |
| 16 | TRAPPE D'ACCÈS | ACCESS FLAP | | 1 | 155P233700 | |
| 17 | CÂBLE | | | 2 | 155P241600 | |
| 18 | CHAÎNE | CHAIN | S6045 | 1 | 2323000060 | |
| 19 | AXE CHAPE | | LL08-44 LG MAXI 21,8MM | 2 | 2420105160 | |
| 20 | GOUPILLE | PIN | V Ø1,6 X 20 NF | 8 | 2352111790 | |
| 21 | CHAÎNE | CHAIN | S6047 | 1 | 2323000040 | |
| 22 | AXE DE CHAÎNE | | LH10-66 | 2 | 2323000090 | |
| 23 | GOUPILLE ÉLASTIQUE | FLEXIBLE PIN | E 6-18 DC | 2 | 2701100180 | |
| 24 | RONDELLE PLATE | FLAT WASHER | L 6 ZB | 2 | 2351123050 | |
| 25 | ECROU AUTOFREINÉ | | H FR M6 CL. 8 ZB | 2 | 2349221490 | |
| 26 | ECROU BAS | THIN NUT | HM M16 CL. 4 ZB | 2 | 2341222070 | |

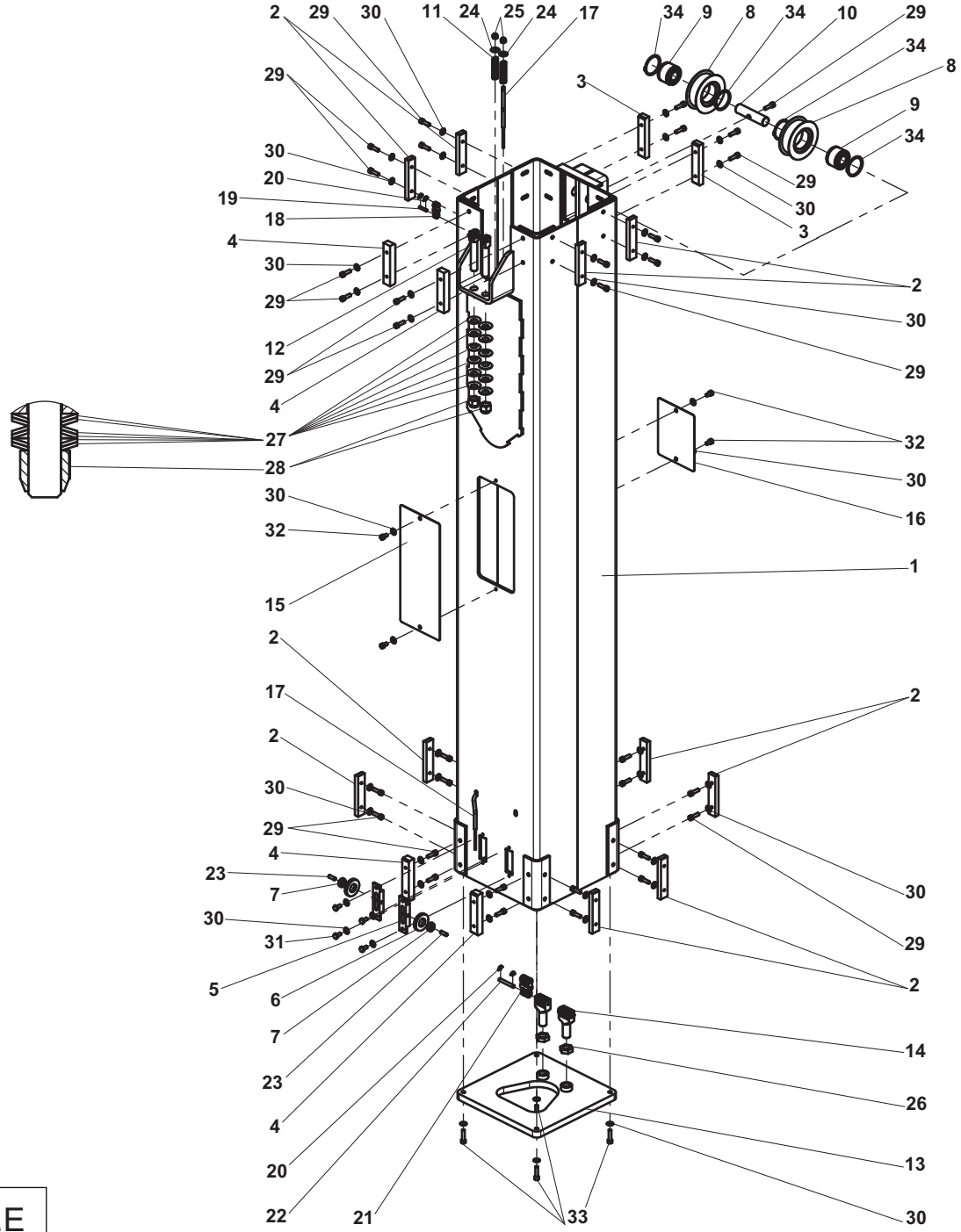


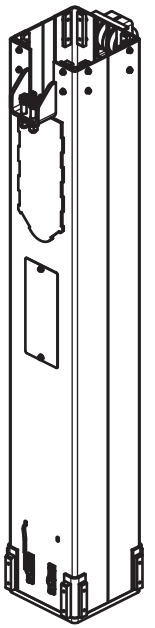

155P245750.E

## ▲ CAISSON N°2
## BOX N°2



| Rep. | Désignation | Designation | Specification | Qty | Code | Up to / jusqu'à |
|---|---|---|---|---|---|---|
| 27 | RONDELLE RESSORT CONIQUE | CONICAL SPRING WASHER | 14,2-28-1,5 DC | 12 | 2351402170 | |
| 28 | ECROU AUTOFREINÉ | | H FR M14 CL. 8 ZB | 2 | 2349221530 | |
| 29 | VIS SPÉCIALE | | CHC M6X20-20 S020312 | 33 | 2700100670 | |
| 30 | RONDELLE CONIQUE STRIÉE | RIDGED CONICAL DISC | M 6 ZB | 44 | 2351902840 | |
| 31 | VIS | SCREW | H M6X12-12 CL.8.8 ZB | 4 | 2301235830 | |
| 32 | VIS | SCREW | CHC M6X10-10 CL.8,8 ZB | 4 | 2308231460 | |
| 33 | VIS | SCREW | CHC M6X25-25 CL.8,8 ZB | 4 | 2308231500 | |
| 34 | ANNEAU ÉLASTIQUE ARBRE | | 42X1,75 DC | 1 | 2700900030 | |

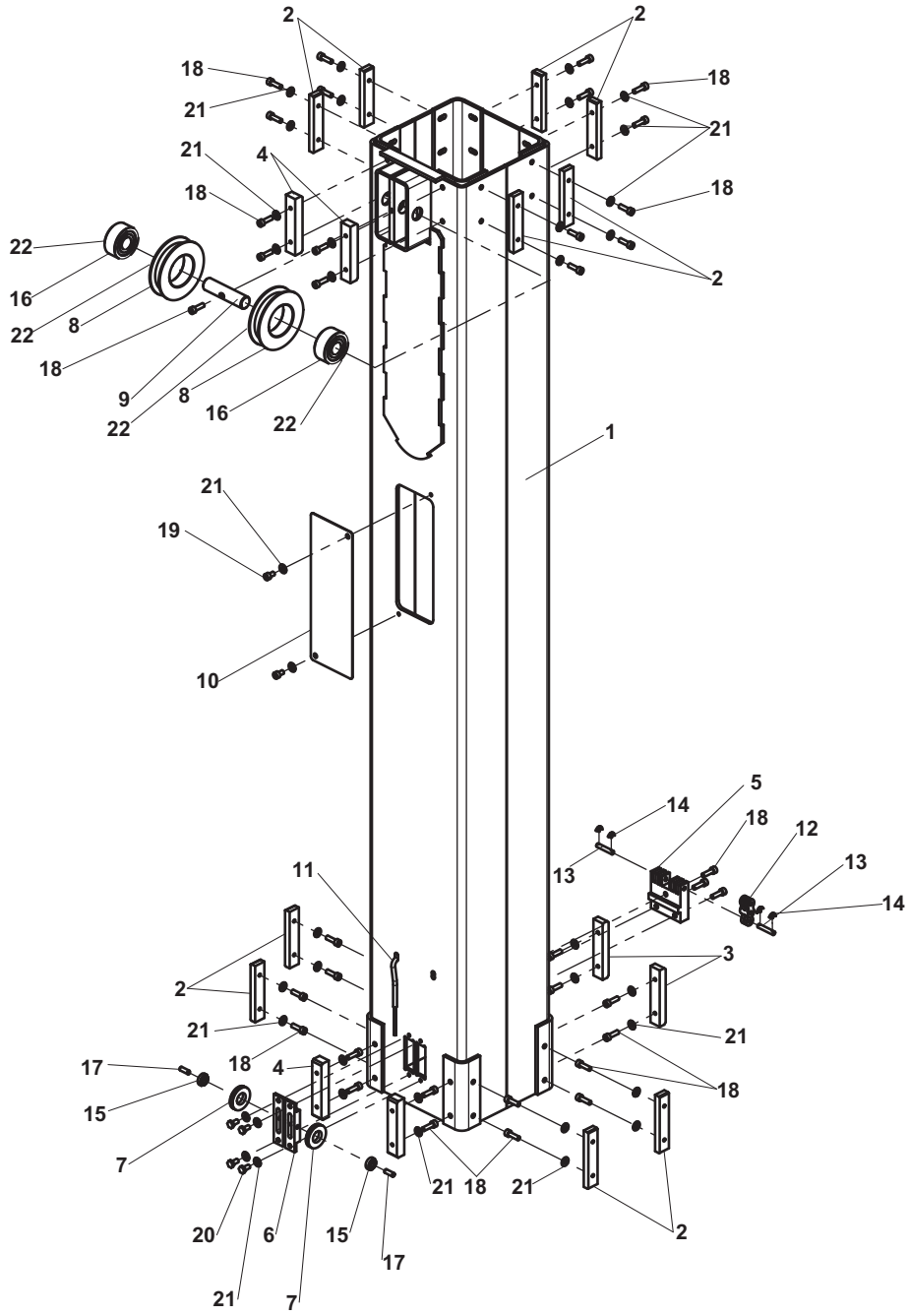


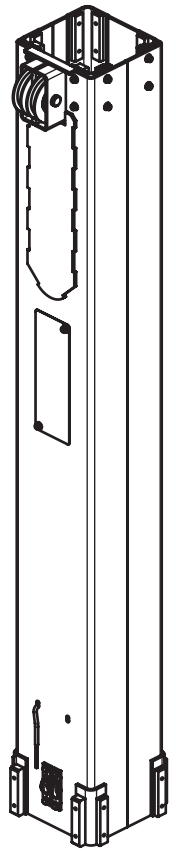

155P245740.F

## ▲ CAISSON N°3
## BOX N°3



| Rep. | Désignation | Designation | Specification | Qty | Code | Up to / jusqu'à |
|---|---|---|---|---|---|---|
| 1 | CAISSON | BOX | N°3 | 1 | 155P231770 | |
| 2 | PATIN DE GUIDAGE | GUIDE PAD | 100X20 EP 10MM | 10 | 103D164340 | |
| 3 | PATIN DE GUIDAGE | GUIDE PAD | 100X20 EP 13MM | 2 | 155P231650 | |
| 4 | PATIN DE GUIDAGE | GUIDE PAD | 100X20 EP 16MM | 4 | 155P233300 | |
| 5 | PEIGNE FIXE POUR CHAINE | FIXED COMB FOR CHAIN | LH10-44 | 1 | 155P231550 | |
| 6 | SUPPORT POULIE | PULLEY SUPPORT | | 2 | 155P231710 | |
| 7 | POULIE À CÂBLE | | | 2 | 113D170200 | |
| 8 | POULIE | PULLEY | LL08-44 | 1 | 155P231760 | |
| 9 | AXE DE POULIE | PULLEY PIN | Ø20 LG 83MM | 1 | 155P231520 | |
| 10 | TRAPPE D'ACCÈS | ACCESS FLAP | | 1 | 155P233690 | |
| 11 | CÂBLE | | | 1 | 155P241600 | |
| 12 | CHAÎNE | CHAIN | | 1 | 2323000050 | |
| 13 | AXE DE CHAÎNE | | LH10-44 | 2 | 2323000080 | |
| 14 | GOUPILLE | PIN | V Ø1,6 X 20 NF | 4 | 2352111790 | |
| 15 | ROULEMENT | BEARING | 626 ZZ | 2 | 2451930160 | |
| 16 | ROULEMENT À BILLE | | | 1 | 2701000050 | |
| 17 | GOUPILLE ÉLASTIQUE | FLEXIBLE PIN | E 6-18 DC | 1 | 2701100180 | |
| 18 | VIS SPÉCIALE | | CHC M6X20-20 S020312 | 1 | 2700100670 | |
| 19 | VIS | SCREW | CHC M6X10-10 CL.8,8 ZB | 2 | 2308231460 | |
| 20 | VIS | SCREW | H M6X12-12 CL.8.8 ZB | 4 | 2301235830 | |
| 21 | RONDELLE CONIQUE STRIÉE | RIDGED CONICAL DISC | M 6 ZB | 38 | 2351902840 | |
| 22 | RONDELLE | WASHER | | 4 | 2700500080 | |
| | | | | | | |
| | | | | | | |
| | | | | | | |
| | | | | | | |

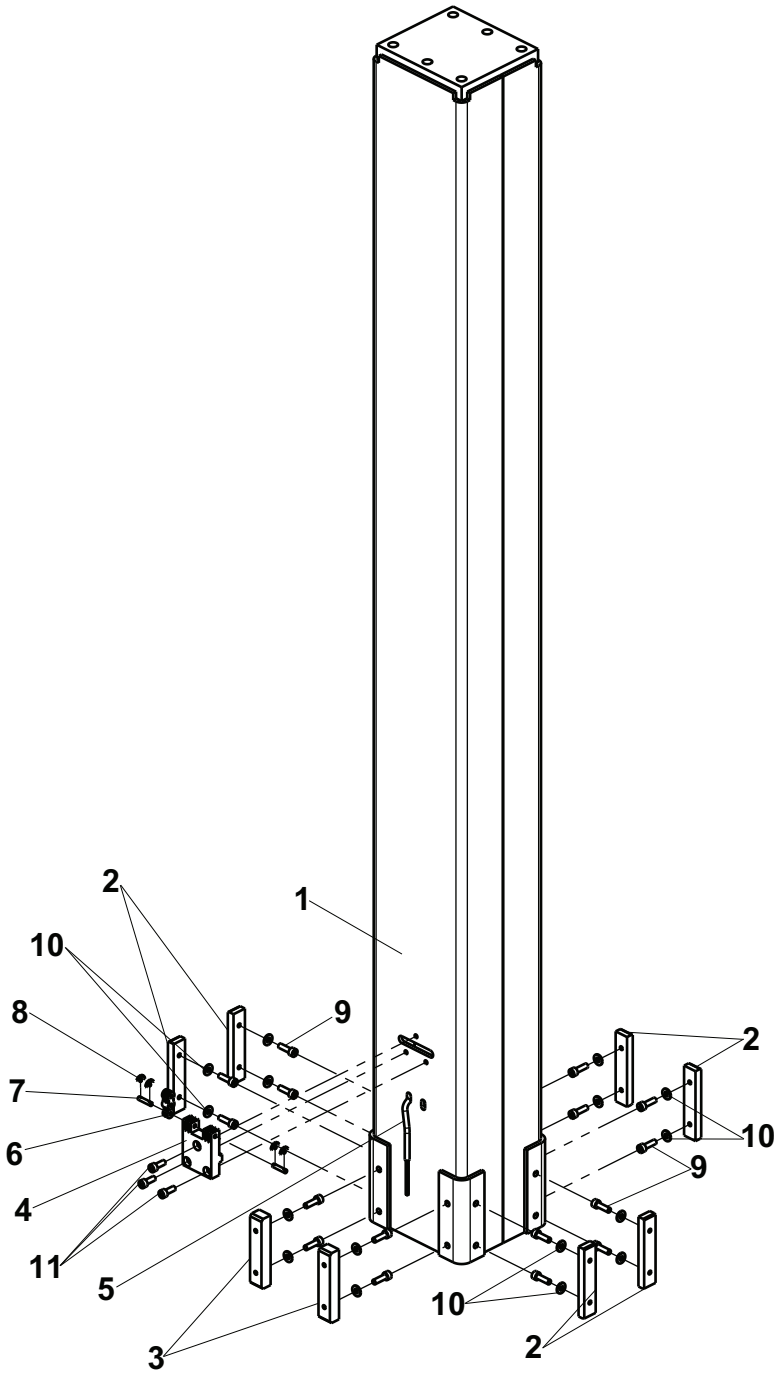


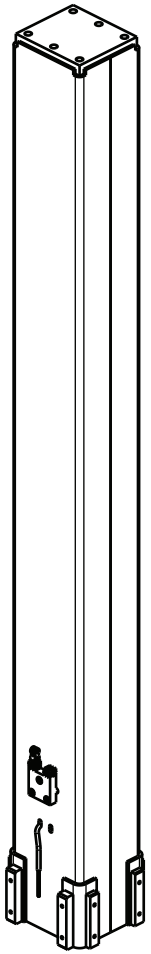

155P245710.D

## ▲ CAISSON N°4
## BOX N°4



| Rep. | Désignation | Designation | Specification | Qty | Code | Up to / jusqu'à |
|---|---|---|---|---|---|---|
| 1 | CAISSON | BOX | N°4 | 1 | 155P231460 | |
| 2 | PATIN DE GUIDAGE | GUIDE PAD | 100X20 EP 10MM | 6 | 103D164340 | |
| 3 | PATIN DE GUIDAGE | GUIDE PAD | 100X20 EP 16MM | 2 | 155P233300 | |
| 4 | PEIGNE FIXE POUR CHAINE | FIXED COMB FOR CHAIN | LL08-44 | 1 | 155P231510 | |
| 5 | CÂBLE | | | 1 | 155P241600 | |
| 6 | CHAÎNE | CHAIN | S6045 | 1 | 2323000060 | |
| 7 | AXE CHAPE | | LL08-44 LG MAXI 21,8MM | 1 | 2420105160 | |
| 8 | GOUPILLE | PIN | V Ø1,6 X 20 NF | 4 | 2352111790 | |
| 9 | VIS SPÉCIALE | | CHC M6X20-20 S020312 | 1 | 2700100670 | |
| 10 | RONDELLE CONIQUE STRIÉE | RIDGED CONICAL DISC | M 6 ZB | 16 | 2351902840 | |
| 11 | VIS | SCREW | CHC M6X16-16 CL.8.8 ZB | 3 | 2308231480 | |

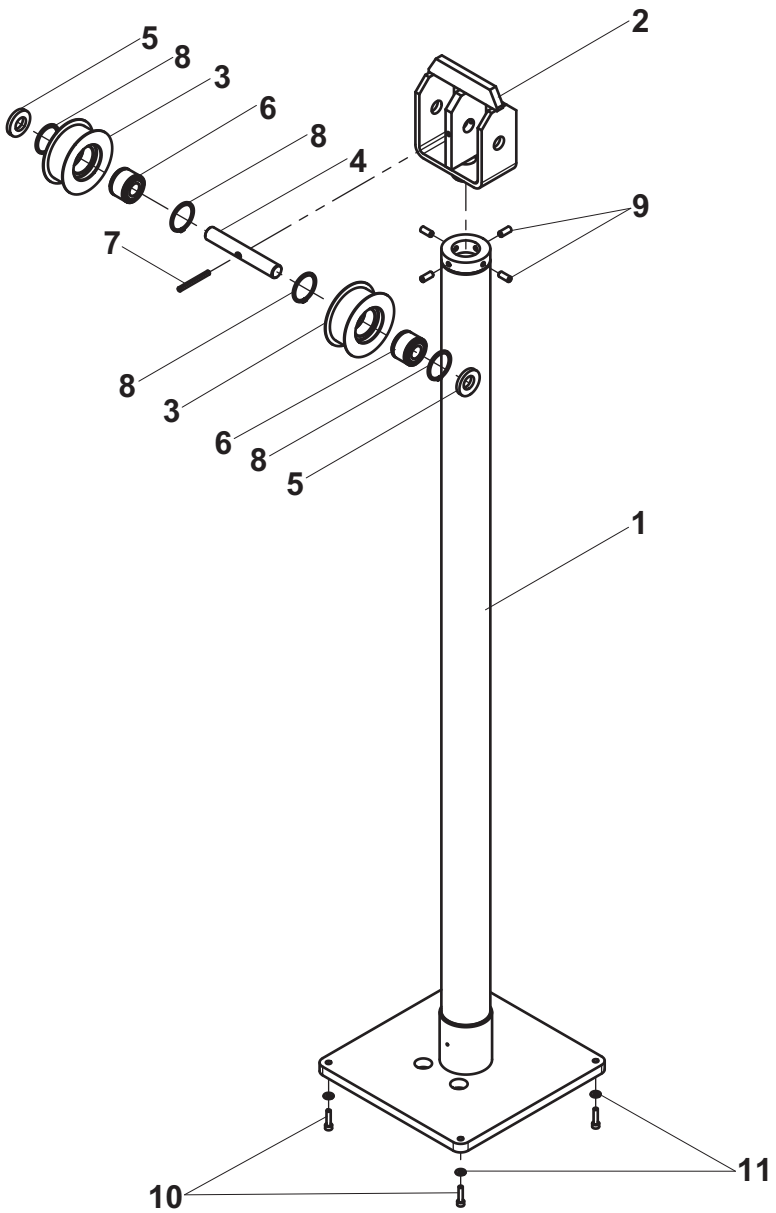


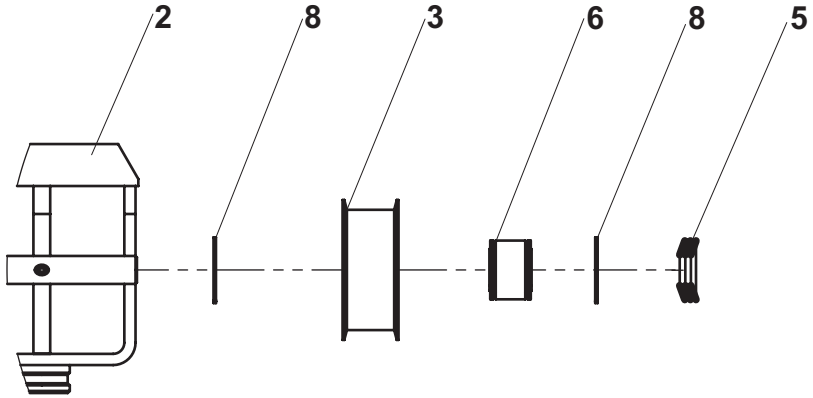


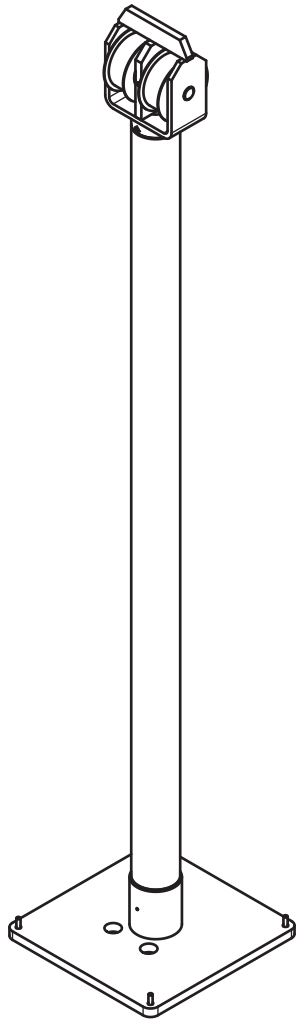

155P245810.H

# ▲ *VÉRIN DE LEVAGE*
# *LIFT CYLINDER*



| Rep. | Désignation | Designation | Specification | Qty | Code | Up to / jusqu'à |
|---|---|---|---|---|---|---|
| ***1*** | ***VÉRIN DE LEVAGE*** | ***LIFT CYLINDER*** | | ***1*** | ***155P254560*** | ***SEE DETAILS*** |
| *2* | *PORTE POULIE* | *PULLEY SUPPORT* | *LH10-66* | *1* | *155P233340* | |
| *3* | *POULIE* | *PULLEY* | *LH10-66* | *2* | *155P231740* | |
| *4* | *AXE DE POULIE* | *PULLEY PIN* | *Ø20 LG 136MM* | *1* | *155P231540* | |
| *5* | *RONDELLE* | *WASHER* | *TREP 4L Ø20 ZB* | *4* | *2351901290* | |
| *6* | *ROULEMENT ROULEAUX CYL.* | *CYL. ROLLER BEARING* | | *2* | *2701000040* | |
| *7* | *GOUPILLE ÉLASTIQUE* | *FLEXIBLE PIN* | *E 6-60 DC* | *1* | *2352216330* | |
| *8* | *ANNEAU ÉLASTIQUE ARBRE* | | *42X1,75 DC* | *1* | *2700900030* | |
| *9* | *VIS À BOUT CUVETTE* | | *HC M8-20-45H ZB* | *4* | *2316331690* | |
| *10* | *VIS* | *SCREW* | *CHC M6X25-25 CL.8,8 ZB* | *4* | *2308231500* | |
| *11* | *RONDELLE CONIQUE STRIÉE* | *RIDGED CONICAL DISC* | *M 6 ZB* | *4* | *2351902840* | |

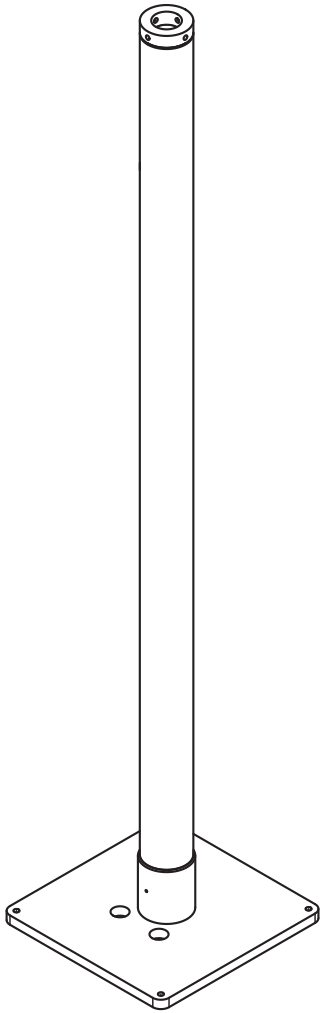

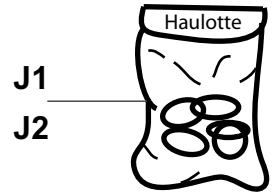


155P254560.C

# ▲ *VÉRIN DE LEVAGE*
# *LIFT CYLINDER*



| Rep. | Désignation | Designation | Specification | Qty | Code | Up to / jusqu'à |
|---|---|---|---|---|---|---|
| *J1* | *POCHETTE DE JOINTS* | *SEAL KIT* | | *1* | *2504000910* | |
| *J2* | *POCHETTE DE JOINTS* | *SEAL KIT* | | *1* | *2505005180* | |

**J1**

**J2**

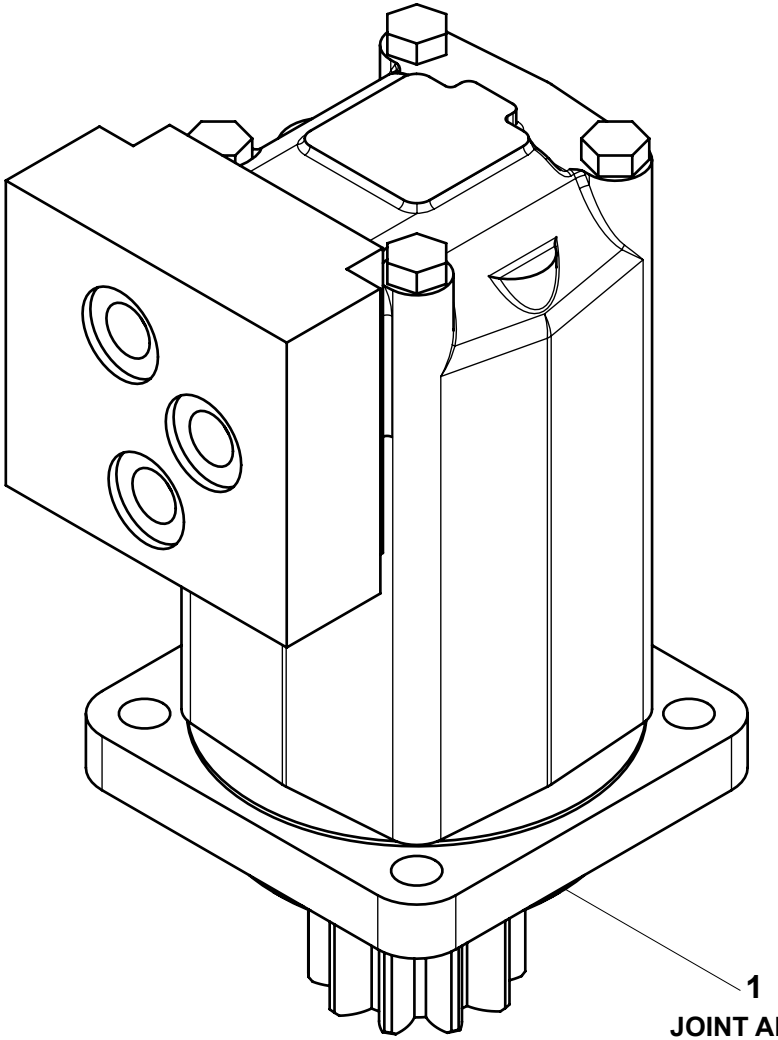

**1**

**JOINT ARBRE /**
*SHAFT SEAL*

2431203430.A

# ▲ *MOTEUR ORIENTATION*
# *SLEWING MOTOR*



| Rep. | Désignation | Designation | Specification | Qty | Code | Up to / jusqu'à |
|---|---|---|---|---|---|---|
| *J* | *JOINT ARBRE* | *SHAFT SEAL* | *VERSION 1* | *1* | *2505004560* | |
| *J1* | *POCHETTE DE JOINTS* | *SEAL KIT* | *VERSION 1* | *1* | *2421693530* | |
| *J2* | *POCHETTE DE JOINTS* | *SEAL KIT* | *VERSION 2* | *1* | *2505007440* | |

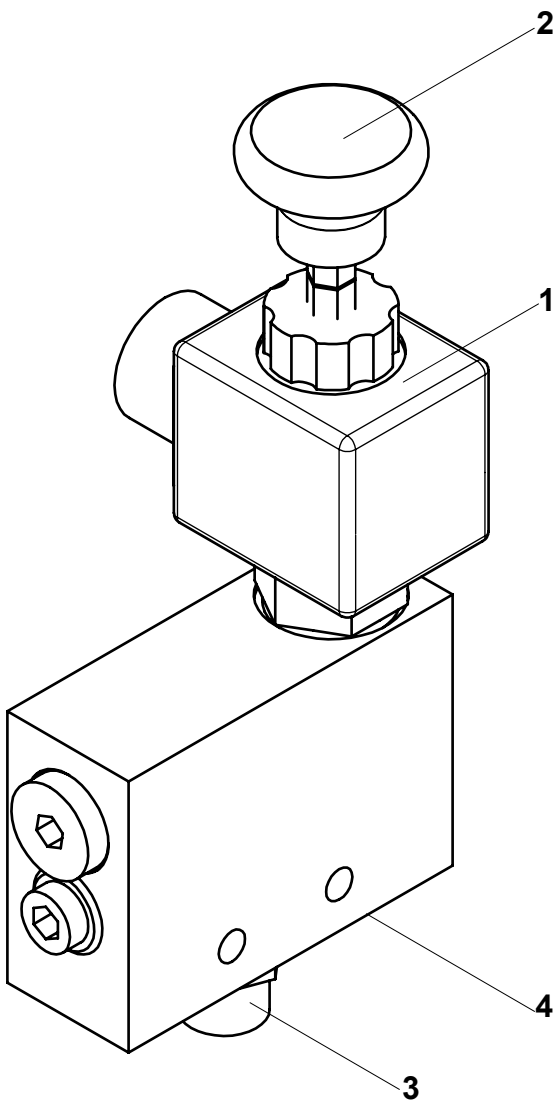


155P246690.B

## ▲ *BLOC DESC. SECOURS*
## *EMERGENCY LOW. UNIT*



| Rep. | Désignation | Designation | Specification | Qty | Code | Up to / jusqu'à |
|---|---|---|---|---|---|---|
| *1* | *BOBINE* | *COIL* | | *1* | *2440210850* | |
| *2* | *MOLETTE* | | | *1* | *2503002540* | |
| *3* | *UNION MÂLE* | | | *1* | *2420104800* | |
| *4* | *UNION MÂLE* | | | *1* | *2505004200* | |
| | | | | | | |
| | | | | | | |
| | | | | | | |
| | | | | | | |
| | | | | | | |
| | | | | | | |
| | | | | | | |
| | | | | | | |
| | | | | | | |
| | | | | | | |
| | | | | | | |
| | | | | | | |
| | | | | | | |
| | | | | | | |
| | | | | | | |
| | | | | | | |
| | | | | | | |
| | | | | | | |
| | | | | | | |
| | | | | | | |
| | | | | | | |

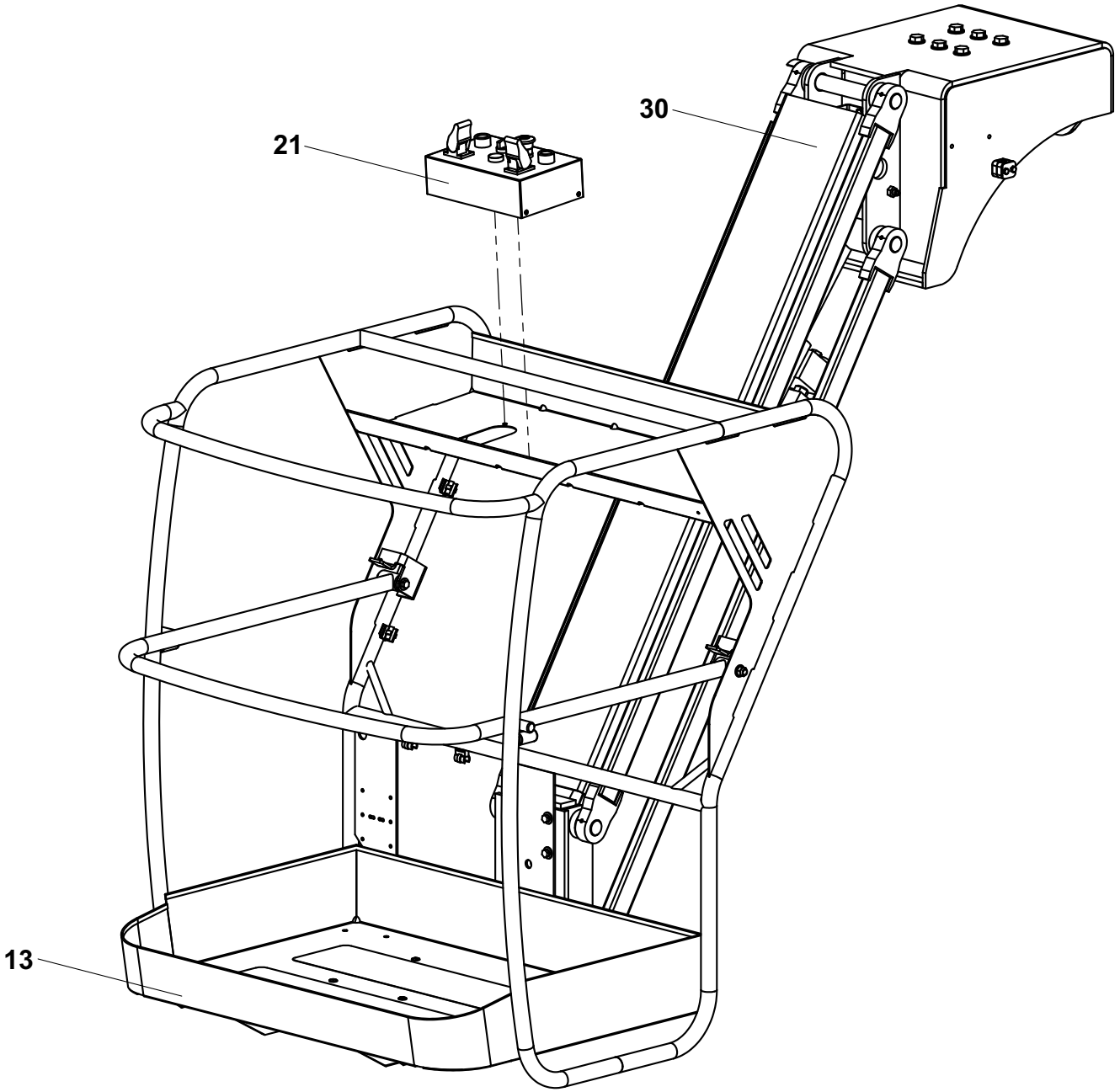


155-4

# ▲ NACELLE + PENDULAIRE
# PLATFORM + JIB

◀ D ▶

| Rep. | Désignation | Designation | Specification | Up to / jusqu'à |
|---|---|---|---|---|
| **13** | **ENSEMBLE NACELLE** | **GANTRY ASSY.** | **STAR 8 (22J) - STAR 10 (22J)** | |
| **21** | **ENSEMBLE ÉLECTRICITÉ** | **ELECTRICITY ASSEMBLY** | **STAR 8 (22J) - STAR 10 (22J)** | |
| **30** | **ENSEMBLE PENDULAIRE** | **JIB ASSEMBLY** | **STAR 8 (22J) - STAR 10 (22J)** | |
| | | | | |
| | | | | |
| | | | | |
| | | | | |
| | | | | |
| | | | | |
| | | | | |
| | | | | |
| | | | | |
| | | | | |
| | | | | |
| | | | | |
| | | | | |
| | | | | |
| | | | | |
| | | | | |
| | | | | |
| | | | | |
| | | | | |
| | | | | |
| | | | | |
| | | | | |

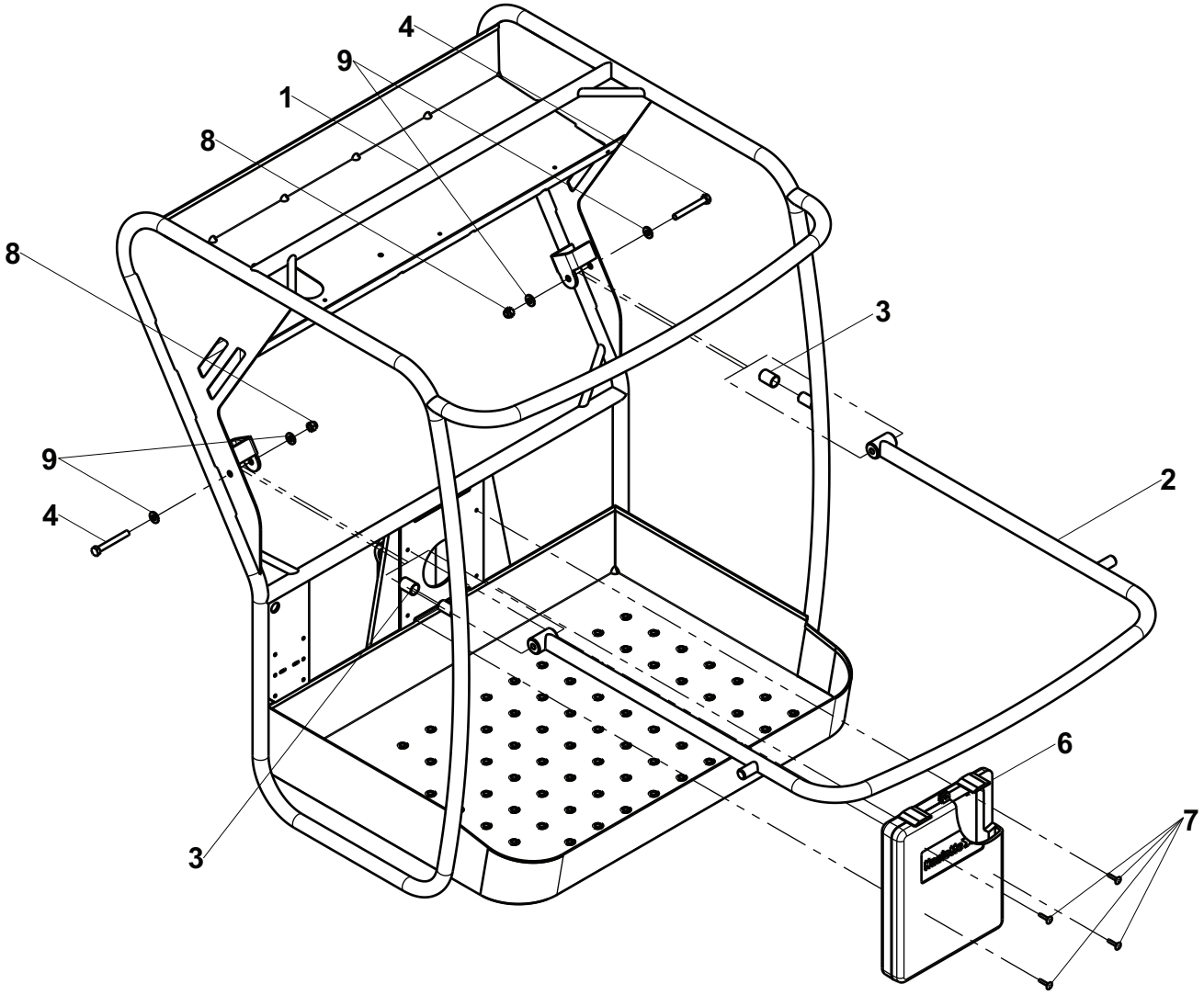


155P275270.D0

# ▲ ENSEMBLE NACELLE - STAR 8 (22J) - STAR 10 (26J)
# GANTRY ASSY. - STAR 8 (22J) - STAR 10 (26J)



| Rep. | Désignation | Designation | Specification | Qty | Code | Up to / jusqu'à |
|---|---|---|---|---|---|---|
| 1 | NACELLE | PLATFORM | | 1 | 155P205860 | |
| 2 | LISSE OUVRANTE | OPENING GUARD RAIL | | 1 | 154B164760 | |
| 3 | EMBOUT | END FITTING | PVC Ø20 LG 30 | 2 | 2820300560 | |
| 4 | VIS | SCREW | H M10X80-26 CL.8.8 ZB | 2 | 2301231860 | |
| 6 | BOÎTE À DOCUMENTS | | | 1 | 2420209920 | |
| 7 | RIVET AVEUGLE TÊTE BOMBÉ | | | 4 | 2421808280 | |
| 8 | ECROU AUTOFREINÉ | | H FR M10 CL. 8 ZB | 2 | 2349221510 | |
| 9 | RONDELLE PLATE | FLAT WASHER | M 10 ZB | 4 | 2351112090 | |

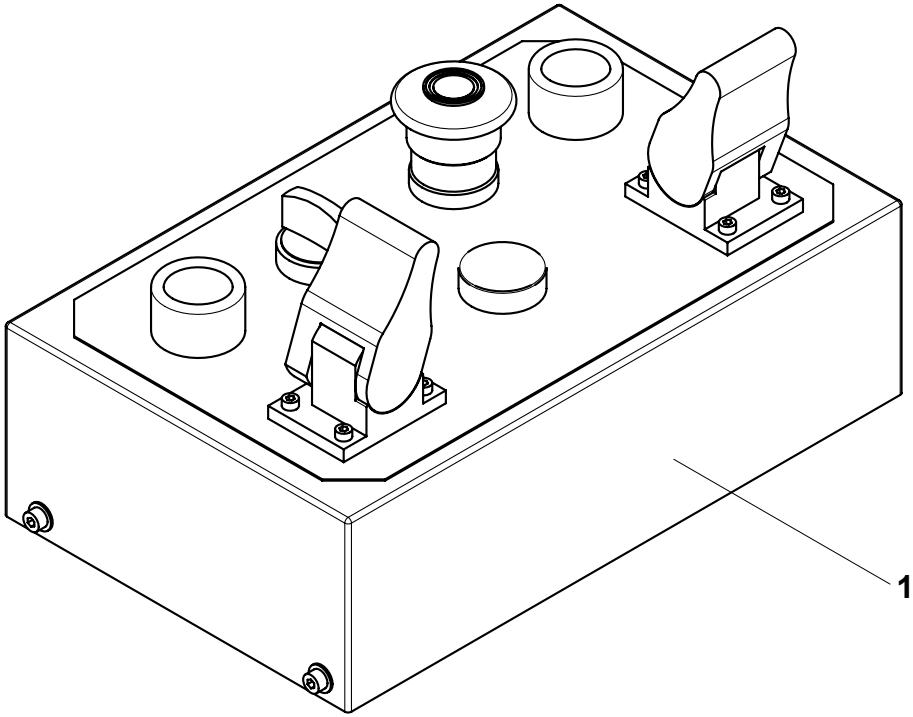


155-4-21

# ▲ ENSEMBLE ÉLECTRICITÉ - STAR 8 (22J) - STAR 10 (26J)
# ELECTRICITY ASSEMBLY - STAR 8 (22J) - STAR 10 (26J)



| Rep. | Désignation | Designation | Specification | Qty | Code | Up to / jusqu'à |
|---|---|---|---|---|---|---|
| **1** | **ENS. COFFRET NACELLE** | **UPPER BOX ASSEMBLY** | **VERSION CE** | **1** | **155P258770** | **STAR 8/10 - SEE DETAILS** |
| **2** | **ENS. COFFRET NACELLE** | **UPPER BOX ASSEMBLY** | **VERSION US** | **1** | **155P258780** | **STAR 22/26J - SEE DETAILS** |

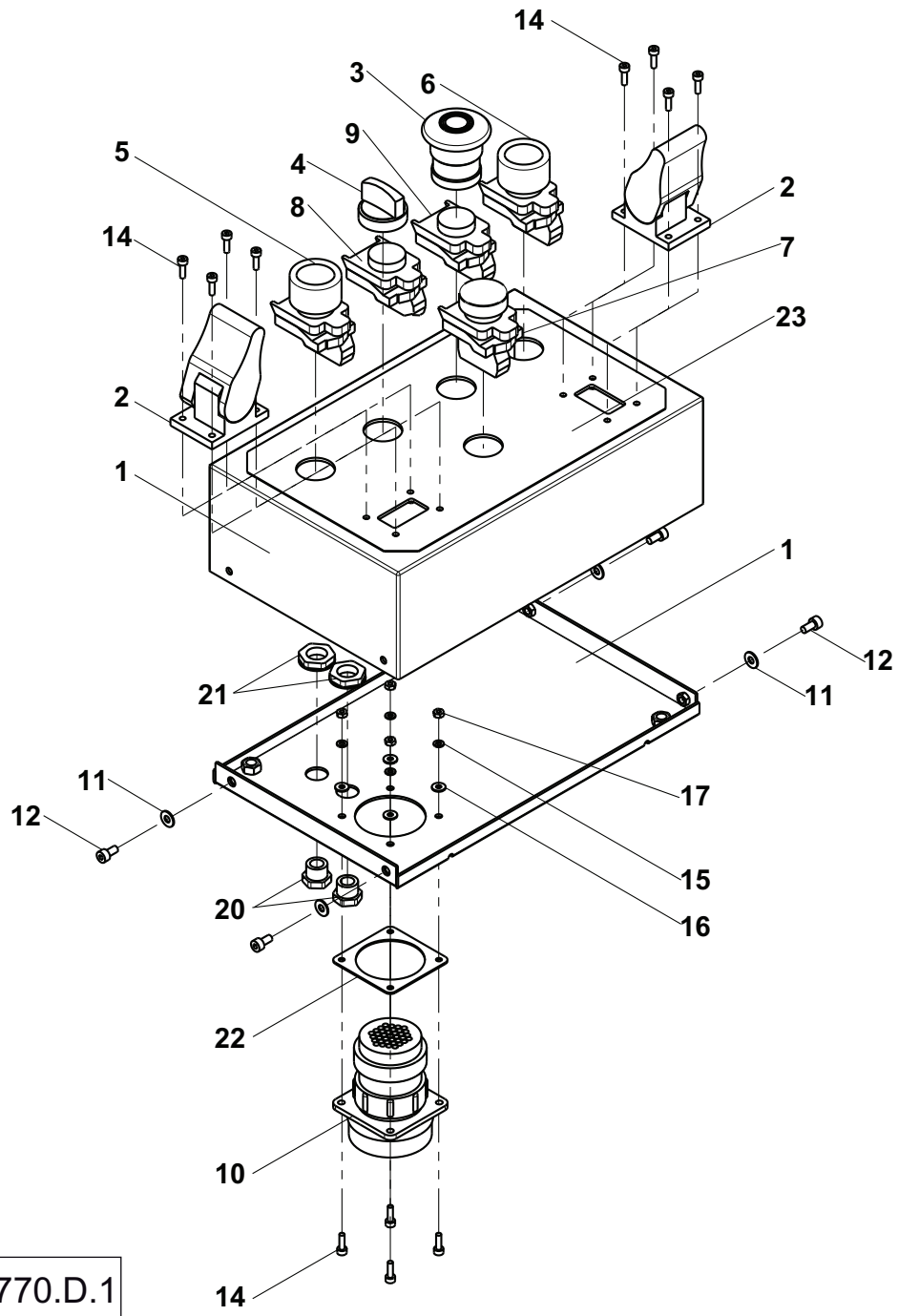


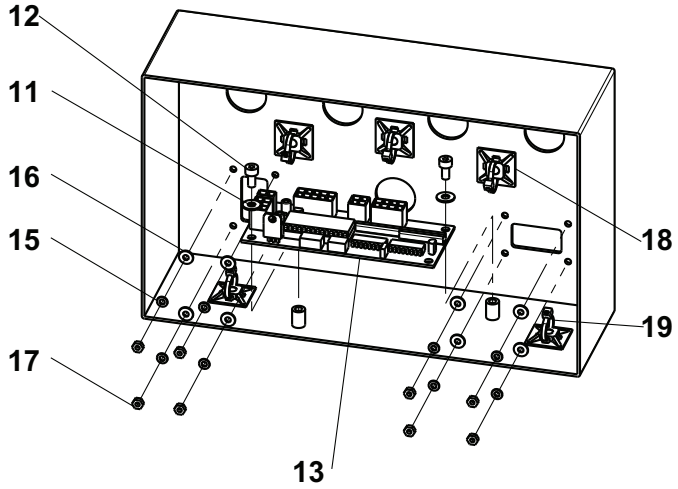


155P258770.D.1

## ▲ *ENS. COFFRET NACELLE*
## *UPPER BOX ASSEMBLY*

◀ D-21-1 ▶

| Rep. | Désignation | Designation | Specification | Qty | Code | Up to / jusqu'à |
|---|---|---|---|---|---|---|
| 1 | PERÇAGE COFFRET NACELLE | PLATFORM BOX DRILLING | | 1 | 155P258830 | |
| 2 | MANIPULATEUR 1 AXE | SINGLE-AXIS JOYSTICK | | 2 | 2441305250 | |
| 3 | TÊTE DE BOUTON TOURNANT | TURN KNOB HEAD | | 1 | 2901011100 | |
| 4 | TÊTE DE BOUTON TOURNANT | TURN KNOB HEAD | | 1 | 2442009600 | |
| 5 | BOUTON POUSSOIR | PUSH BUTTON | Ø22 VERT / GREEN | 1 | 2440206850 | |
| 6 | BOUTON POUSSOIR | PUSH BUTTON | Ø22 NOIR / BLACK | 1 | 2440206800 | |
| 7 | VOYANT ROUGE | RED LIGHT INDICATOR | 24V H9MM | 1 | 2442201820 | |
| 8 | CORPS COMPLET | CONTACT BLOCK | | 1 | 2440314390 | |
| 9 | CORPS COMPLET | CONTACT BLOCK | | 1 | 2901011110 | |
| 10 | EMBASE | BASE | 37 VOIES / WAYS | 1 | 2440502980 | |
| 11 | RONDELLE PLATE | FLAT WASHER | M 4 ZB | 6 | 2351112030 | |
| 12 | VIS | SCREW | CHC M4X8-8 CL.8.8 ZB | 6 | 2700100310 | |
| 13 | CARTE SERIAL | SERIAL BOARD | | 1 | 2440316730 | |
| 14 | VIS | SCREW | CHC M3X10-10 CL.8.8 ZB | 12 | 2700100640 | |
| 15 | RONDELLE À DENTS | | DEC 3 ZB | 12 | 2351301030 | |
| 16 | RONDELLE PLATE | FLAT WASHER | M 3 ZB | 12 | 2351112010 | |
| 17 | ECROU | NUT | H M3 CL. 8 ZB | 12 | 2341221010 | |
| 18 | SUPPORT COLLIER | CHAIN SUPPORT | | 5 | 2326012210 | |
| 19 | COLLIER | COLLAR | 2,5 X 98 MM | 5 | 2326012220 | |
| 20 | BOUCHON | PLUG | DE9 | 1 | 2440206070 | |
| 21 | CONTRE-ÉCROU | | CE 9M | 1 | 2440314090 | |
| 22 | JOINT | SEAL | | 1 | 196D162100 | |
| 23 | PUPITRE NACELLE | UPPER CONTROL BOX | | 1 | 3078148280 | |
| | | | | | | |
| | | | | | | |
| | | | | | | |

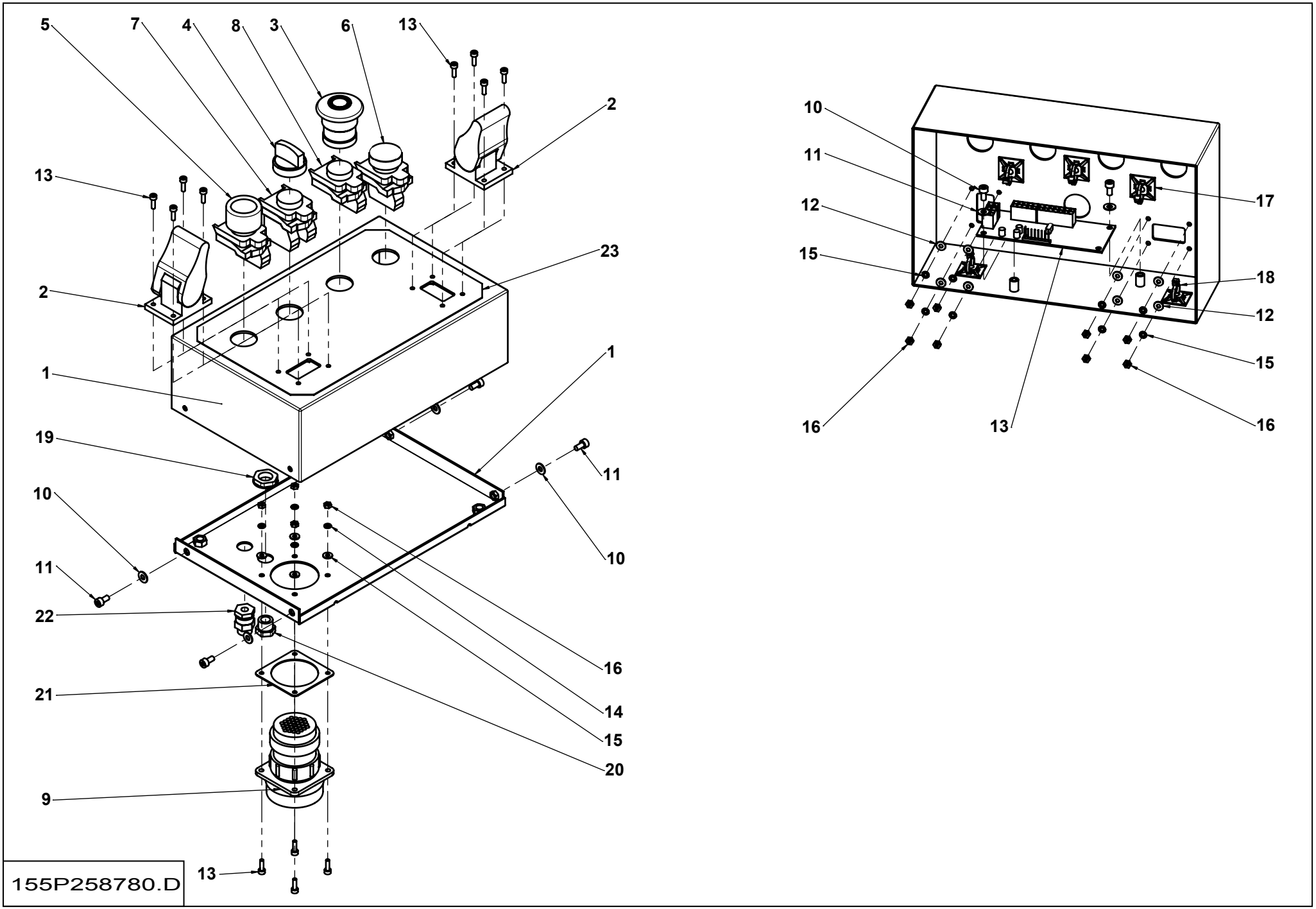
5
7
4
8
3
6
13
2
13
23
2
1
1
19
11
10
10
11
22
16
21
14
15
20
9
13
155P258780.D
10
11
12
15
17
18
12
15
16
13
16

## ▲ ENS. COFFRET NACELLE
## UPPER BOX ASSEMBLY



| Rep. | Désignation | Designation | Specification | Qty | Code | Up to / jusqu'à |
|---|---|---|---|---|---|---|
| 1 | PERÇAGE COFFRET NACELLE | PLATFORM BOX DRILLING | | 1 | 155P258830 | |
| 2 | MANIPULATEUR 1 AXE | SINGLE-AXIS JOYSTICK | | 2 | 2441305250 | |
| 3 | TÊTE DE BOUTON TOURNANT | TURN KNOB HEAD | | 1 | 2901011100 | |
| 4 | TÊTE DE BOUTON TOURNANT | TURN KNOB HEAD | | 1 | 2442009600 | |
| 5 | BOUTON POUSSOIR | PUSH BUTTON | Ø22 VERT / GREEN | 1 | 2440206850 | |
| 6 | VOYANT ROUGE | RED LIGHT INDICATOR | 24V H9MM | 1 | 2442201820 | |
| 7 | CORPS COMPLET | CONTACT BLOCK | | 1 | 2440314390 | |
| 8 | CORPS COMPLET | CONTACT BLOCK | | 1 | 2901011110 | |
| 9 | EMBASE | BASE | 37 VOIES / WAYS | 1 | 2440502980 | |
| 10 | RONDELLE PLATE | FLAT WASHER | M 4 ZB | 6 | 2351112030 | |
| 11 | VIS | SCREW | CHC M4X8-8 CL.8.8 ZB | 6 | 2700100310 | |
| 12 | CARTE SERIAL | SERIAL BOARD | | 1 | 2440316730 | |
| 13 | VIS | SCREW | CHC M3X10-10 CL.8.8 ZB | 12 | 2700100640 | |
| 14 | RONDELLE À DENTS | | DEC 3 ZB | 12 | 2351301030 | |
| 15 | RONDELLE PLATE | FLAT WASHER | M 3 ZB | 12 | 2351112010 | |
| 16 | ECROU | NUT | H M3 CL. 8 ZB | 12 | 2341221010 | |
| 17 | SUPPORT COLLIER | CHAIN SUPPORT | | 5 | 2326012210 | |
| 18 | COLLIER | COLLAR | 2,5 X 98 MM | 5 | 2326012220 | |
| 19 | CONTRE-ÉCROU | | | 2 | 2440314090 | |
| 20 | BOUCHON | PLUG | DE9 | 2 | 2440206070 | |
| 21 | JOINT | SEAL | | 1 | 196D162100 | |
| 22 | CONTRE-ÉCROU | | | 2 | 2421602150 | |
| 23 | PUPITRE NACELLE | UPPER CONTROL BOX | | 1 | 3078148280 | |
| | | | | | | |
| | | | | | | |
| | | | | | | |

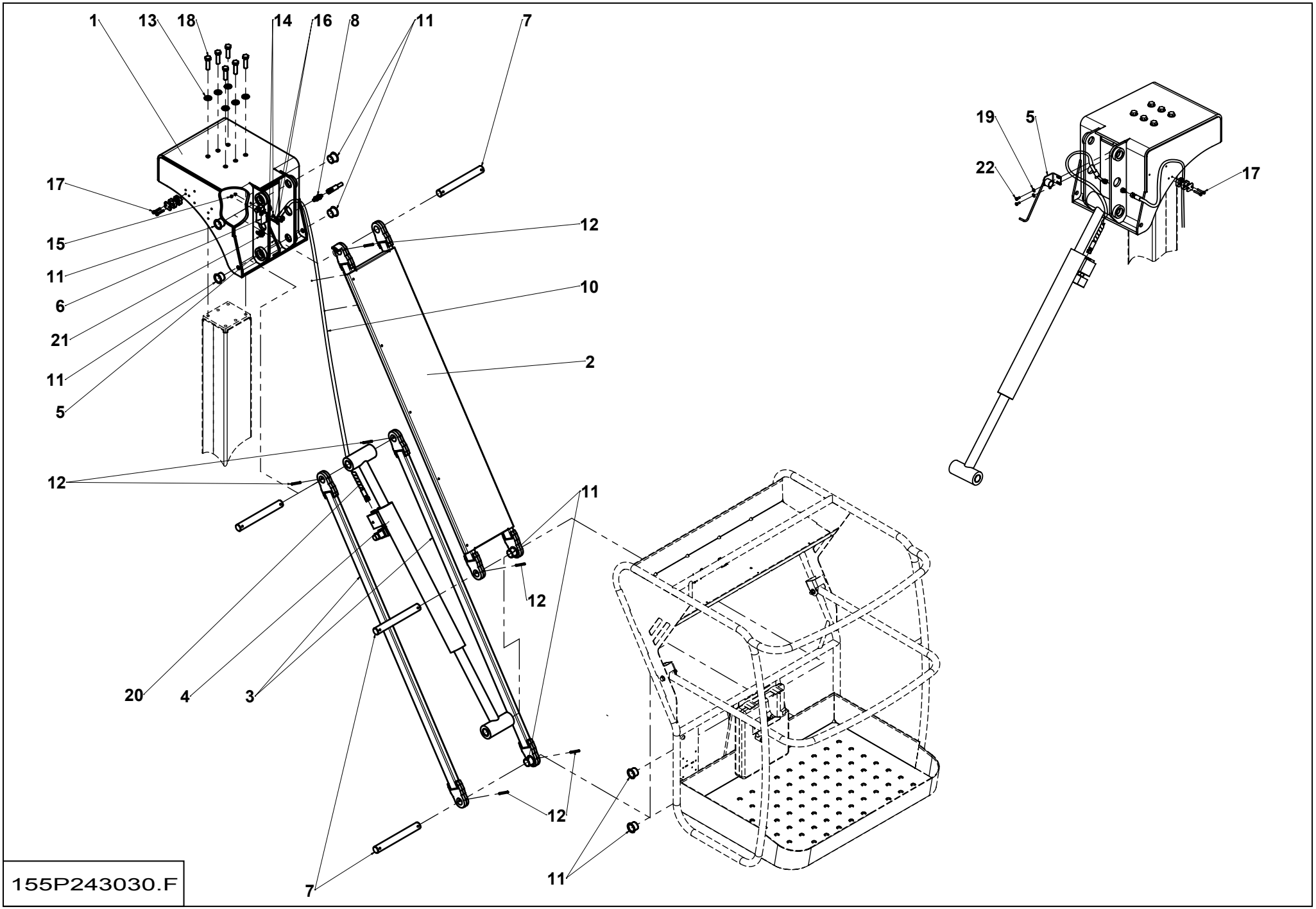
1
13
18
14
16
8
11
7
17
15
11
6
21
11
5
12
10
2
12
11
12
20
4
3
12
11
7
19
5
22
17
155P243030.F

# ▲ ENSEMBLE PENDULAIRE - STAR 8 (22J) - STAR (26J)
# JIB ASSEMBLY - STAR 8 (22J) - STAR (26J)



| Rep. | Désignation | Designation | Specification | Qty | Code | Up to / jusqu'à |
|---|---|---|---|---|---|---|
| 1 | CHAPE | CLEVIS | | 1 | 155P233370 | |
| 2 | BRAS PENDULAIRE | PENDULAR ARM | | 1 | 155P233640 | |
| 3 | TIRANT | TIE ROD | | 2 | 153B149560 | |
| **4** | **VERIN PENDULAIRE** | **JIB CYLINDER** | | **1** | **154P205490** | **SEE DETAILS** |
| 5 | CAPTEUR D'ANGLE | ANGLE SENSOR | | 1 | 2901002390 | |
| 6 | INTERRUPTEUR DE POSITION | POSITION SWITCH | | 1 | 2440901490 | |
| 7 | AXE DE TIRANT | PIN- TIE ROD | | 4 | 153D155900 | |
| 8 | UNION ÉGALE T.C JIC | | 7/16 - 20 | 1 | 2369170150 | |
| 9 | FLEXIBLE | FLEXIBLE | D-C90 1/4' JIC 7/16 -20 | 1 | 2369071800 | |
| 11 | BAGUE À COLLERETTE | | 30X34X26 MU | 8 | 2390150190 | |
| 12 | GOUPILLE ÉLASTIQUE | FLEXIBLE PIN | E 6-60 DC | 6 | 2352216330 | |
| 13 | RONDELLE PLATE | FLAT WASHER | M 14 ZB | 6 | 2351112120 | |
| 14 | RONDELLE PLATE | FLAT WASHER | M 4 ZB | 2 | 2351112030 | |
| 15 | ECROU AUTOFREINÉ | | H FR M4 CL. 8 ZB | 2 | 2349221480 | |
| 16 | VIS | SCREW | CHC M4X40-20 CL.8,8 ZB | 2 | 2308231230 | |
| 17 | VIS | SCREW | CHC M6X35-24 CL.8,8 ZB | 4 | 2308231520 | |
| 18 | VIS | SCREW | H M14X50-34 CL.8.8 ZB | 6 | 2301235790 | |
| 19 | RONDELLE CONIQUE STRIÉE | RIDGED CONICAL WASHER | M 6 ZB | 4 | 2351902840 | |
| 20 | SPIRALE PLASTIQUE SOUPLE | PLASTIC SPIRAL HOSE | Ø INT.12,7 | 0,45 | 2421903430 | |
| 21 | PRESSE ETOUPE | | | 1 | 2421607690 | |
| 22 | VIS | SCREW | H M6X16-16 CL.8.8 ZB | 4 | 2331231310 | |
| | | | | | | |
| | | | | | | |
| | | | | | | |
| | | | | | | |
| | | | | | | |

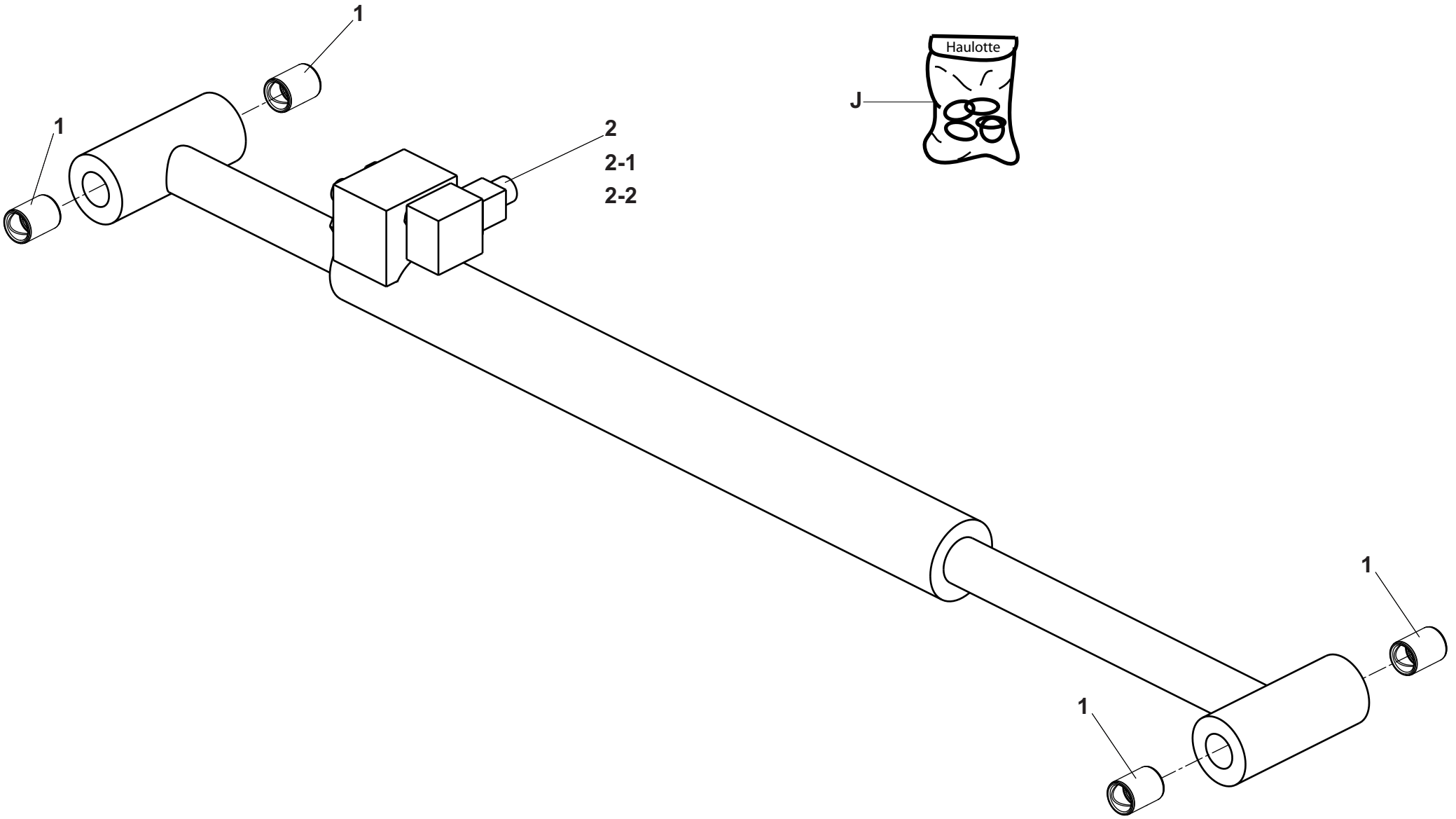


154P205490.A

# ▲ *VERIN PENDULAIRE*
# *JIB CYLINDER*



| Rep. | Désignation | Designation | Specification | Qty | Code | Up to / jusqu'à |
|---|---|---|---|---|---|---|
| *1* | *BAGUE* | *BUSH* | *PM 3030 DX* | *4* | *2390150530* | |
| *2* | *BLOC* | *BLOCK* | | *1* | *2420212780* | |
| *2-1* | *ELECTROVALVE* | *SOLENOID VALVE* | | *1* | *2440508680* | |
| *2-2* | *BOBINE* | *COIL* | *24V* | *1* | *2503000970* | |
| *J* | *POCHETTE DE JOINTS* | *SEAL KIT* | | *1* | *2421694250* | |

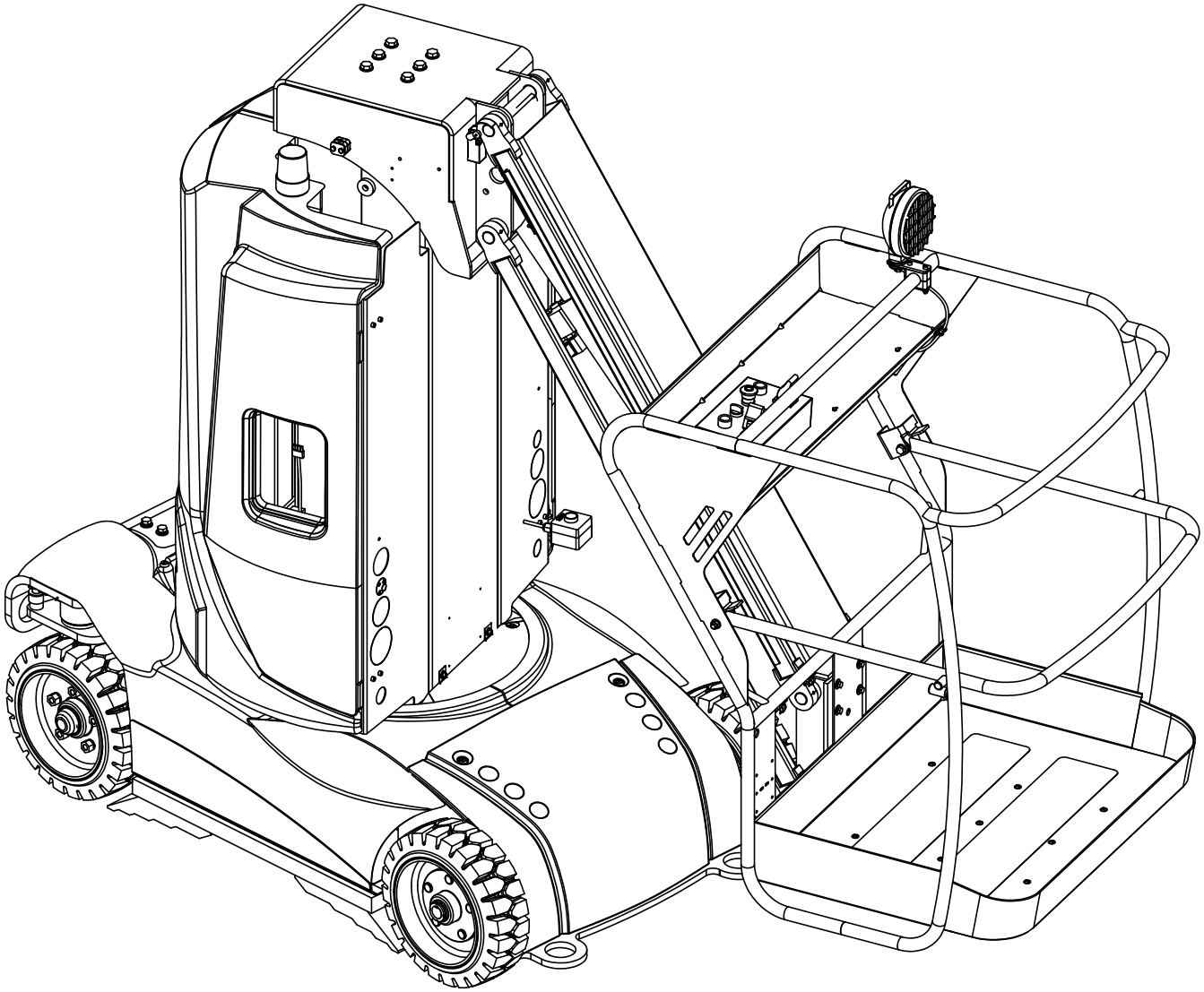

155-8

# ▲ FAISCEAU
# BUNDLE

◀ E ▶

| Rep. | Désignation | Designation | Specification | Up to / jusqu'à |
|---|---|---|---|---|
| **10** | **ENSEMBLE FAISCEAUX** | **BUNDLES** | **STAR 8 (22J) - STAR 10 (26J)** | |

# ▲ ENSEMBLE FAISCEAUX
# BUNDLES



| Rep. | Désignation | Designation | Specification | Qty | Code | Up to / jusqu'à |
|---|---|---|---|---|---|---|
| 1 | FAISCEAU ÉLECTRO VANNE | | YV1A-DIRECTION DROITE | 1 | 155P257990 | |
| 2 | FAISCEAU ÉLECTRO VANNE | | YV1B-DIRECTION GAUCHE | 1 | 155P258000 | |
| 3 | FAISCEAU ÉLECTRO VANNE | | YV2A-ORIENTATION GAUCHE | 1 | 155P258010 | |
| 4 | FAISCEAU ÉLECTRO VANNE | | YV2B-ORIENTATION DROITE | 1 | 155P258020 | |
| 5 | FAISCEAU ÉLECTRO VANNE | | YV3A-MONTÉE PENDULAIRE | 1 | 155P258030 | |
| 6 | FAISCEAU ÉLECTRO VANNE | | YV3B-MONTÉE MÂT | 1 | 155P258040 | |
| 7 | FAISCEAU ÉLECTRO VANNE | | YV4-DESCENTE MÂT | 1 | 155P258050 | |
| 8 | FAISCEAU | BUNDLE | COFF.TOUREL / FREIN G&D | 1 | 155P258060 | |
| 9 | FAISCEAU | BUNDLE | COFF.TOUREL / DÉVERS SQ1 | 1 | 155P258070 | |
| 10 | FAISCEAU | BUNDLE | COFF.TOUREL / POTAR DIR. | 1 | 155P258080 | |
| 11 | FAISCEAU | BUNDLE | COFF.TOUREL / CHARGEUR | 1 | 155P258090 | |
| 12 | FAISCEAU | BUNDLE | COFF.TOUREL / KLAXON HA1 | 1 | 155P258100 | |
| 13 | FAISCEAU | BUNDLE | COFF.TOUREL / FDCH SQ10 | 1 | 155P258110 | |
| 14 | FAISCEAU | BUNDLE | COFF.TOUREL / FDCB SQ4 | 1 | 155P258120 | |
| 15 | FAISCEAU | BUNDLE | COFF.TOUREL / COUPE BAT. | 1 | 155P258130 | |
| 16 | FAISCEAU | BUNDLE | COFF.TOUREL / VARIATEUR | 1 | 155P258140 | |
| 17 | FAISCEAU CÂBLE SPIRALE | | | 1 | 155P258150 | |
| **18** | **FAISCEAU CAPTEUR** | **CABLE BUNDLE SENSOR** | **POTENTIOMÈTRE DIREC-** | **1** | **155P258160** | **SEE DETAILS** |
| 19 | FAISCEAU PUISSANCE | CABLE BUNDLE (HIGH-PERFOR- | CHARGEUR BATTERIES | 1 | 155P258170 | |
| 20 | FAISCEAU PUISSANCE | CABLE BUNDLE (HIGH-PERFOR- | COFF. TOURELLE / B- VAR | 1 | 155P258180 | |
| 21 | FAISCEAU PUISSANCE | CABLE BUNDLE (HIGH-PERFOR- | D1 MOT. G / D2 MOT. D | 1 | 155P258190 | |
| 22 | FAISCEAU PUISSANCE | CABLE BUNDLE (HIGH-PERFOR- | D1 MOT. D / D2 MOT. G | 1 | 155P258200 | |
| 23 | FAISCEAU PUISSANCE | CABLE BUNDLE (HIGH-PERFOR- | F1 VAR. / D1 MOT. G | 1 | 155P258210 | |
| 24 | FAISCEAU PUISSANCE | CABLE BUNDLE (HIGH-PERFOR- | F2 VAR. / D2 MOT. G | 1 | 155P258220 | |
| 25 | FAISCEAU PUISSANCE | CABLE BUNDLE (HIGH-PERFOR- | A2 MOT. G / A2 MOT. D | 1 | 155P258230 | |
| 26 | FAISCEAU PUISSANCE | CABLE BUNDLE (HIGH-PERFOR- | T1 VAR. / A1 MOT. D | 1 | 155P258240 | |

# ▲ ENSEMBLE FAISCEAUX
# BUNDLES



| Rep. | Désignation | Designation | Specification | Qty | Code | Up to / jusqu'à |
|---|---|---|---|---|---|---|
| 27 | FAISCEAU PUISSANCE | CABLE BUNDLE (HIGH-PERFOR- | T2 VAR. / A1 MOT. G | 1 | 155P258250 | |
| 28 | FAISCEAU PUISSANCE | CABLE BUNDLE (HIGH-PERFOR- | FUS. FU1 / B+ VAR. | 1 | 155P258260 | |
| 29 | FAISCEAU PUISSANCE | CABLE BUNDLE (HIGH-PERFOR- | COUP-BAT. SB1 / FUS. FU1 | 1 | 155P258270 | |
| 30 | FAISCEAU PUISSANCE | CABLE BUNDLE (HIGH-PERFOR- | P VAR. / NEG. POMPE M1 | 1 | 155P258290 | |
| 31 | FAISCEAU PUISSANCE | CABLE BUNDLE (HIGH-PERFOR- | B+ VAR. / POS. POMPE M1 | 1 | 155P258310 | |
| 32 | FAISCEAU PUISSANCE | CABLE BUNDLE (HIGH-PERFOR- | B+ VAR. / A2 MOT. G | 1 | 155P258320 | |
| 33 | FAISCEAU PUISSANCE | CABLE BUNDLE (HIGH-PERFOR- | B+ VAR. / A2 MOT. G | 1 | 155P258320 | |
| 34 | FAISCEAU PUISSANCE | CABLE BUNDLE (HIGH-PERFOR- | - BAT. GB2 / B- VAR. | 1 | 155P258330 | |
| 35 | FAISCEAU PUISSANCE | CABLE BUNDLE (HIGH-PERFOR- | - BAT. GB1 / + BAT. GB2 | 1 | 155P258340 | |
| 36 | FAISCEAU PUISSANCE | CABLE BUNDLE (HIGH-PERFOR- | +BAT. GB1 / COUPBAT. SB1 | 1 | 155P258350 | |
| | | | | | | |
| | | | | | | |
| | | | | | | |
| | | | | | | |
| | | | | | | |
| | | | | | | |
| | | | | | | |
| | | | | | | |
| | | | | | | |
| | | | | | | |
| | | | | | | |
| | | | | | | |
| | | | | | | |
| | | | | | | |
| | | | | | | |
| | | | | | | |

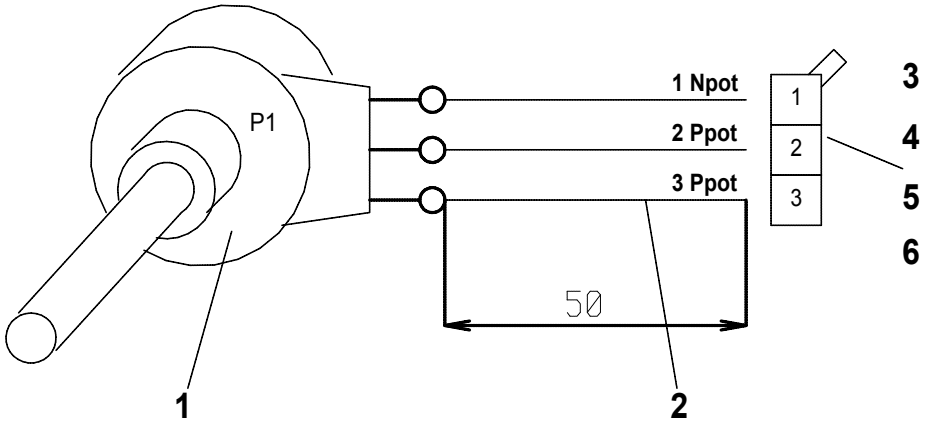


**BRANCHER SUR FAISCEAU 155P258080**
*CONNECT TO LOOM 155P258080*

155p258160.B

# ▲ FAISCEAU CAPTEUR
# CABLE BUNDLE SENSOR



| Rep. | Désignation | Designation | Specification | Qty | Code | Up to / jusqu'à |
|---|---|---|---|---|---|---|
| *1* | *POTENTIOMÈTRE* | *POTENTIOMETER* | *2.5 K OHMS* | *1* | *2441606080* | |
| *2* | *CÂBLE* | | *1MM2* | *1* | *2440301550* | |
| *3* | *COSSE* | *LUG* | *Ø4* | *1* | *2440305570* | |
| *4* | *DOUILLE* | *SOCKET* | | *3* | *2440404030* | |
| *5* | *JOINT* | *SEAL* | *3 V* | *1* | *2441003240* | |
| *6* | *JOINT* | *SEAL* | *3 V* | *1* | *2441003230* | |
| | | | | | | |
| | | | | | | |
| | | | | | | |
| | | | | | | |
| | | | | | | |
| | | | | | | |
| | | | | | | |
| | | | | | | |
| | | | | | | |
| | | | | | | |
| | | | | | | |
| | | | | | | |
| | | | | | | |
| | | | | | | |
| | | | | | | |
| | | | | | | |
| | | | | | | |
| | | | | | | |
| | | | | | | |
| | | | | | | |

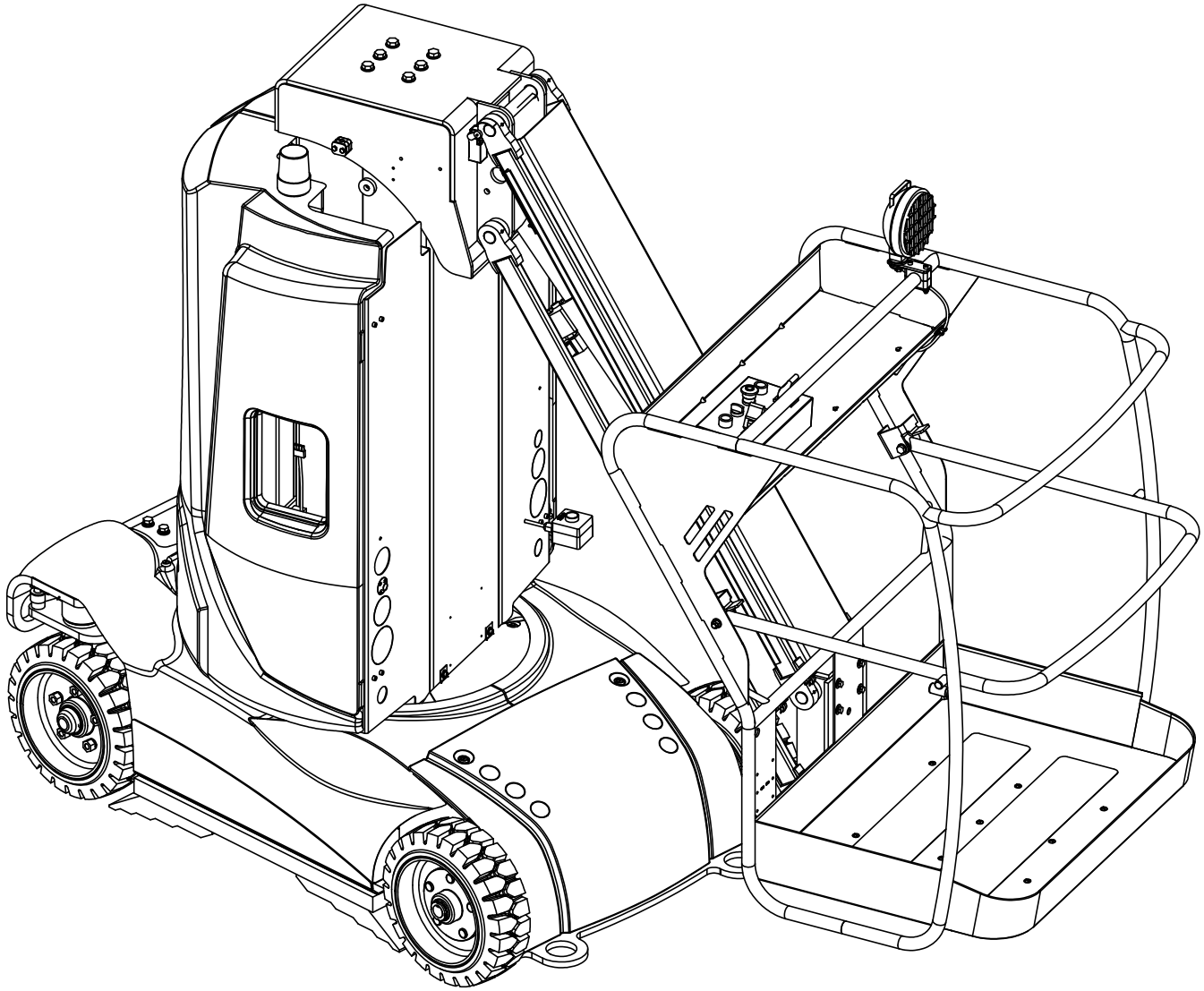

155-6

# ETIQUETTES
# LABELS

F

| Rep. | Désignation | Designation | Specification | Up to / jusqu'à |
|---|---|---|---|---|
| **09** | **ETIQUETTES COMMUNES** | **COMMON LABELS** | | |
| **10** | **ETIQUETTES FRANCE** | **FRANCE LABELS** | | |
| **11** | **ETIQUETTES GB** | **GB LABELS** | | |
| **12** | **ETIQUETTES ALLEMAGNE** | **RFA LABELS** | | |
| **13** | **ETIQUETTES ESPAGNE** | **SPAIN LABELS** | | |
| **14** | **ETIQUETTES ITALIE** | **ITALY LABELS** | | |
| **15** | **ETIQUETTES HOLLANDE** | **HOLLAND LABELS** | | |
| **16** | **ETIQUETTES AUSTRALIE** | **AUSTRALIA LABELS** | | |
| **17** | **ETIQUETTES DANEMARK** | **DENMARK LABELS** | | |
| **18** | **ETIQUETTES FINLANDE** | **FINLAND LABELS** | | |
| **19** | **ETIQUETTES PORTUGAL** | **PORTUGAL LABELS** | | |
| **20** | **ETIQUETTES SUÈDE** | | | |
| | | | | |
| | | | | |
| | | | | |
| | | | | |
| | | | | |
| | | | | |
| | | | | |
| | | | | |
| | | | | |
| | | | | |
| | | | | |
| | | | | |
| | | | | |
| | | | | |

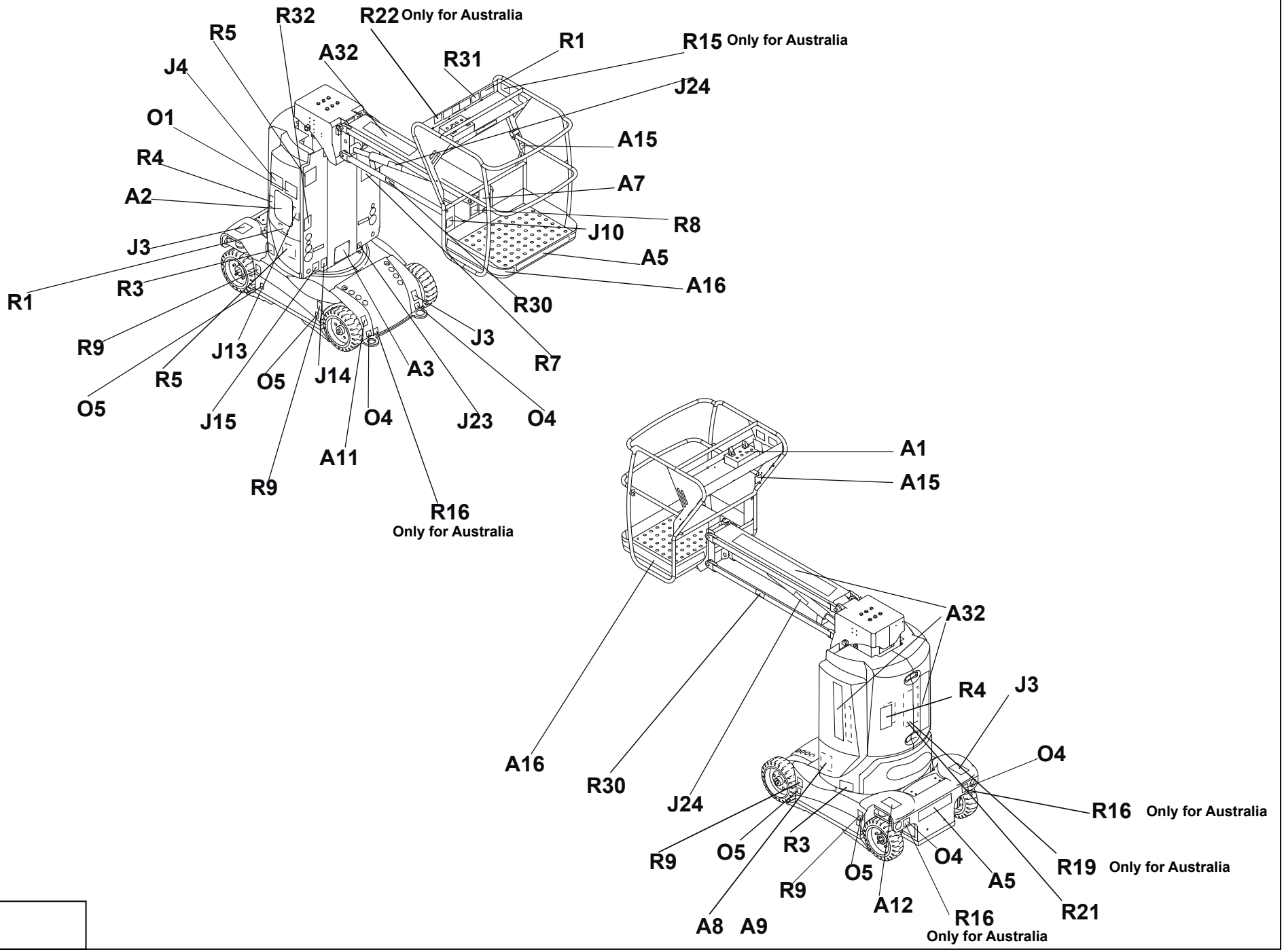
R32
R22 Only for Australia
R5
A32
R31
R1
R15 Only for Australia
J4
J24
O1
A15
R4
A7
A2
R8
J10
J3
A5
R3
A16
R1
R30
J3
R9
J13
R7
A3
R5
O5
J14
O5
O4
J15
J23
O4
A11
R9
R16
Only for Australia
A1
A15
A32
R4
J3
A16
O4
R30
J24
R16 Only for Australia
R9
O5
R3
O4
R19 Only for Australia
O5
A5
R9
A12
R21
A8
A9
R16
Only for Australia

155-6-9

# ▲ ETIQUETTES COMMUNES
# COMMON LABELS



| Rep. | Désignation | Designation | Specification | Qty | Code | Up to / jusqu'à |
|---|---|---|---|---|---|---|
| | RIVET AVEUGLE TÊTE BOMBÉ | | TAPD 48 BS | 1 | 2421803570 | |
| R1 | HAUTEUR PLANCHER | « FLOOR HEIGHT» LABEL | STAR 8 NG | 2 | 307P219210 | |
| R1 | HAUTEUR PLANCHER | « FLOOR HEIGHT» LABEL | STAR 10 NG | 2 | 307P216420 | |
| R2 | ECRASEMENT MAIN | « HAND CRUSHING » LABEL | | 2 | 3078149010 | |
| R4 | ECRASEMENT CORPS | « BODY CRUSHING » LABEL | | 2 | 3078144440 | |
| R5 | ELECTROCUTION | « ELECTROCUTION » LABEL | | 1 | 3078144470 | |
| R7 | NE PAS STATIONNER | « DO NOT PARK » PARK | | 1 | 3078144240 | |
| R8 | BARRE COULISSANTE | SLIDING BAR | CE - ANSI | 1 | 3078153510 | |
| R9 | CHARGE SUR 1 ROUE | LOAD ON ONE WHEEL | STAR 8 NG | 4 | 307P219220 | |
| R9 | CHARGE SUR 1 ROUE | LOAD ON ONE WHEEL | STAR 10 NG | 4 | 307P216430 | |
| R21 | PORT DE VÊTEMENT | « WEARING OF CLOTHES » LABEL | | 1 | 3078143610 | |
| R30 | ECRASEMENT VERTICAL DU CORPS | | | 2 | 3078144440 | |
| R31 | SENS TRANSLATION | « DIRECTION OF TRAVEL » LABEL | | 1 | 3078148790 | |
| R32 | ON/OFF | ON/OFF | | 1 | 3078148800 | |
| O4 | CROCHET ANCRAGE | | | 4 | 3078145110 | |
| O5 | FOURCHE CHARIOT | « TRUCK FORK » LABEL | | 4 | 3078143830 | |
| J3 | NE PAS POSER | DO NOT STAND LABEL | | 2 | 3078143640 | |
| J4 | MASSE SOUDURE | « WELDING EARTH » LABEL | | 2 | 3078143600 | |
| J10 | PRISE 220V | « 220 V SOCKET » LABEL | | 1 | 3078143540 | |
| J13 | ENTRETIEN BATTERIE | « BATTERY SERVICING » LABEL | | 1 | 3078143510 | |
| J14 | CHARGE BATTERIE | « BATTERY CHARGE » LABEL | | 1 | 3078144460 | |
| J15 | ALIMENTATION 220V | 220V SUPPLY | | 1 | 3078144480 | |
| J23 | DESCENTE DE SECOURS MAT | EMERGENCY LOWERING | | 1 | 307P218900 | |
| J24 | DESCENTE SECOURS PENDULAIRE | EMERGENCY LOWERING | | 1 | 3078144420 | |
| A1 | PUPITRE NACELLE | PLATFORM CONTROL PANEL | | 1 | 3078148280 | |
| A2 | PUPITRE TOURELLE | TURNTABLE CONTROL DESK LABEL | | 1 | 3078148300 | |

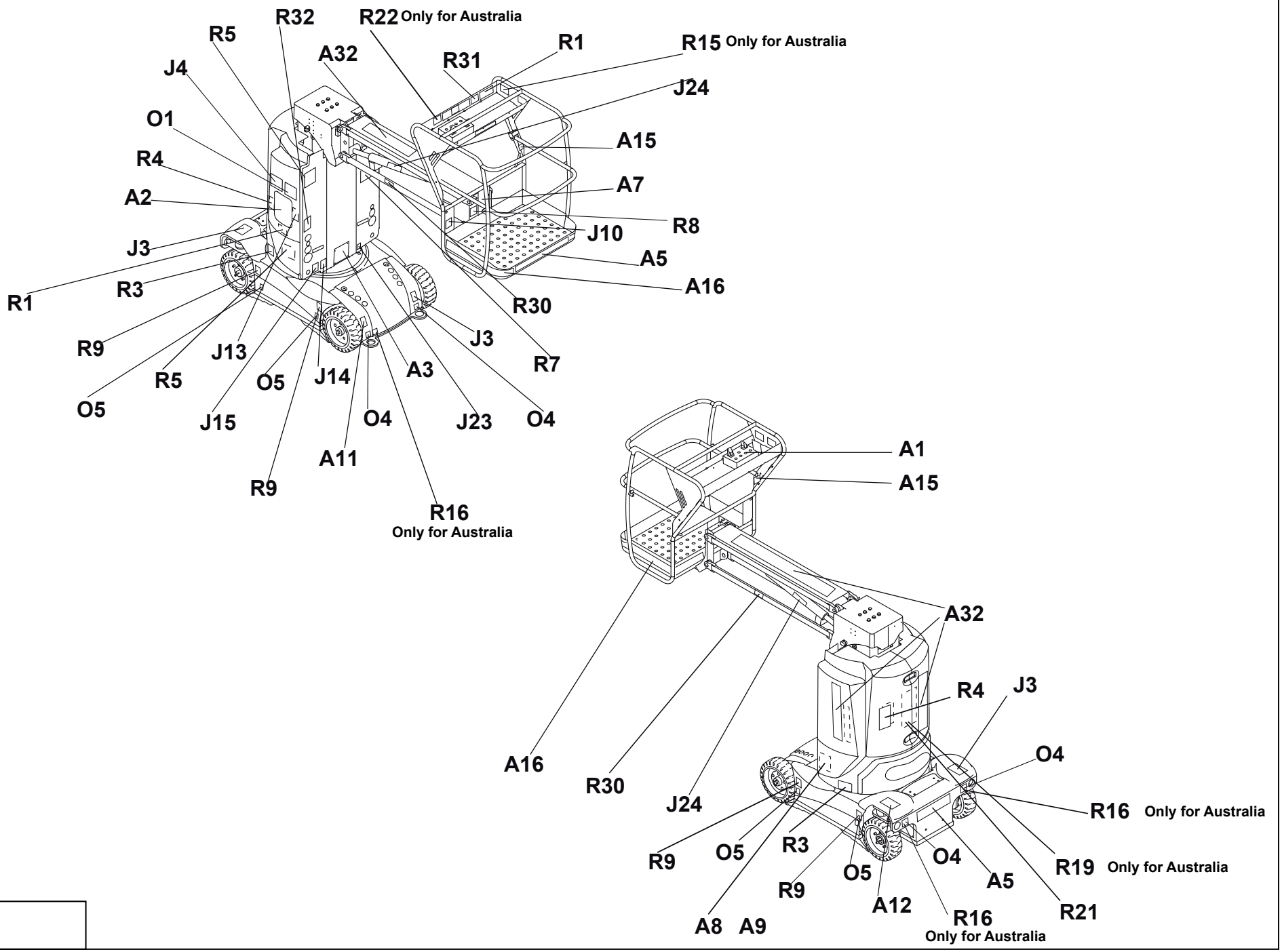
R32
R22 Only for Australia
R5
A32
R31
R1
R15 Only for Australia
J4
J24
O1
A15
R4
A7
A2
R8
J10
J3
A5
R3
A16
R1
R30
J3
R9
J13
R7
A3
R5
O5
J14
O5
O4
J15
J23
O4
A11
R9
R16
Only for Australia
A1
A15
A32
R4
J3
A16
O4
R30
J24
R16 Only for Australia
R9
O5
R3
O4
R19 Only for Australia
O5
A5
R9
A12
R21
A8
A9
R16
Only for Australia

155-6-9

# ▲ ETIQUETTES COMMUNES
# COMMON LABELS



| Rep. | Désignation | Designation | Specification | Qty | Code | Up to / jusqu'à |
|---|---|---|---|---|---|---|
| A5 | GRAPHISME | LOGO | HAULOTTE | 2 | 307P217410 | |
| A7 | LIRE MANUEL | « READ MANUAL » LABEL | | 1 | 3078143680 | |
| A8 | HUILE HYDRAULIQUE | « HYDRAULIC OIL » LABEL | | 1 | 3078143520 | |
| A8 | HUILE BIODEGRADABLE | BIODEGRADABLE OIL | CEE | 1 | 3078148890 | |
| A9 | NIVEAU D'HUILE | OIL LEVEL | | 1 | 3078143590 | |
| A11 | FLÈCHE VERTE | GREEN ARROW | | 1 | 3078148820 | |
| A12 | FLÈCHE ROUGE | RED ARROW | | 1 | 3078148830 | |
| A15 | FIXATION DU HARNAIS | HARNESS FIXING PART | | 2 | 307P216290 | |
| A16 | ADHÉSIF JAUNE ET NOIR | | LG 1.25 M | 1 | 2421808660 | |
| A32 | GRAPHISME | LOGO | STAR 8 NG | 1 | 307P217430 | |
| A32 | GRAPHISME | LOGO | STAR 10 NG | 1 | 307P217400 | |

# ▲ ETIQUETTES FRANCE
# FRANCE LABELS



| Rep. | Désignation | Designation | Specification | Qty | Code | Up to / jusqu'à |
|---|---|---|---|---|---|---|
| O1 | CONSIGNES UTILISATION | « OPERATING INSTRUCTIONS » | FR | 1 | 3078149030 | |
| A3 | PLAQUE CONSTRUCTEUR | MANUFACTURERS PLATE | FR | 1 | 307P218980 | |

# ▲ ETIQUETTES GB
# GB LABELS



| Rep. | Désignation | Designation | Specification | Qty | Code | Up to / jusqu'à |
|---|---|---|---|---|---|---|
| O1 | CONSIGNES UTILISATION | « OPERATING INSTRUCTIONS » | UK | 1 | 3078149610 | |
| A3 | PLAQUE CONSTRUCTEUR | MANUFACTURERS PLATE | UK | 1 | 307P219020 | |
| | | | | | | |
| | | | | | | |
| | | | | | | |
| | | | | | | |
| | | | | | | |
| | | | | | | |
| | | | | | | |
| | | | | | | |
| | | | | | | |
| | | | | | | |
| | | | | | | |
| | | | | | | |
| | | | | | | |
| | | | | | | |
| | | | | | | |
| | | | | | | |
| | | | | | | |
| | | | | | | |
| | | | | | | |
| | | | | | | |
| | | | | | | |
| | | | | | | |
| | | | | | | |
| | | | | | | |

# ▲ ETIQUETTES ALLEMAGNE
# RFA LABELS



| Rep. | Désignation | Designation | Specification | Qty | Code | Up to / jusqu'à |
|---|---|---|---|---|---|---|
| O1 | CONSIGNES UTILISATION | « OPERATING INSTRUCTIONS » | DE | 1 | 3078149620 | |
| A3 | PLAQUE CONSTRUCTEUR | MANUFACTURERS PLATE | DE | 1 | 307P218940 | |

# ▲ ETIQUETTES ESPAGNE
# SPAIN LABELS



| Rep. | Désignation | Designation | Specification | Qty | Code | Up to / jusqu'à |
|---|---|---|---|---|---|---|
| O1 | CONSIGNES UTILISATION | « OPERATING INSTRUCTIONS » | SP | 1 | 3078149630 | |
| A3 | PLAQUE CONSTRUCTEUR | MANUFACTURERS PLATE | SP | 1 | 307P218990 | |

# ▲ ETIQUETTES ITALIE
# ITALY LABELS



| Rep. | Désignation | Designation | Specification | Qty | Code | Up to / jusqu'à |
|---|---|---|---|---|---|---|
| O1 | CONSIGNES UTILISATION | « OPERATING INSTRUCTIONS » | IT | 1 | 3078149640 | |
| A3 | PLAQUE CONSTRUCTEUR | MANUFACTURERS PLATE | IT | 1 | 307P219030 | |

# ▲ ETIQUETTES HOLLANDE
# HOLLAND LABELS



| Rep. | Désignation | Designation | Specification | Qty | Code | Up to / jusqu'à |
|---|---|---|---|---|---|---|
| O1 | CONSIGNES UTILISATION | « OPERATING INSTRUCTIONS » | NL | 1 | 3078149650 | |
| A3 | PLAQUE CONSTRUCTEUR | MANUFACTURERS PLATE | NL | 1 | 307P218960 | |

# ▲ ETIQUETTES AUSTRALIE
# AUSTRALIA LABELS



| Rep. | Désignation | Designation | Specification | Qty | Code | Up to / jusqu'à |
|---|---|---|---|---|---|---|
| R16 | CHARGE ELINGUE | « SLING LOAD » LABEL | | 1 | 3078144490 | |
| R19 | FLUIDE SOUS PRESSION | PRESSURISED LIQUID LABEL | AUS | 1 | 3078145200 | |
| R22 | NE PAS DESCENDRE | DO NOT GO DOWN LABEL | | 1 | 3078144360 | |
| O1 | CONSIGNES UTILISATION | « OPERATING INSTRUCTIONS » | AUS | 1 | 3078149660 | |
| J10 | PRISE 240V | « 240 V SOCKET » LABEL | | 1 | 3078144570 | |
| A3 | PLAQUE CONSTRUCTEUR | MANUFACTURERS PLATE | UK | 1 | 307P219020 | |
| A15 | PORT DE HARNAIS | WEARING (OF) SAFETY HARNESS | | 1 | 3078144520 | |

# ▲ ETIQUETTES DANEMARK
# DENMARK LABELS



| Rep. | Désignation | Designation | Specification | Qty | Code | Up to / jusqu'à |
|---|---|---|---|---|---|---|
| O1 | CONSIGNES UTILISATION | « OPERATING INSTRUCTIONS » | DK | 1 | 3078149670 | |
| A3 | PLAQUE CONSTRUCTEUR | MANUFACTURERS PLATE | DK | 1 | 307P218950 | |

# ▲ ETIQUETTES FINLANDE
# FINLAND LABELS



| Rep. | Désignation | Designation | Specification | Qty | Code | Up to / jusqu'à |
|---|---|---|---|---|---|---|
| O1 | CONSIGNES UTILISATION | « OPERATING INSTRUCTIONS » | FIN | 1 | 3078149680 | |
| A3 | PLAQUE CONSTRUCTEUR | MANUFACTURERS PLATE | FIN | 1 | 307P218970 | |
| | | | | | | |
| | | | | | | |
| | | | | | | |
| | | | | | | |
| | | | | | | |
| | | | | | | |
| | | | | | | |
| | | | | | | |
| | | | | | | |
| | | | | | | |
| | | | | | | |
| | | | | | | |
| | | | | | | |
| | | | | | | |
| | | | | | | |
| | | | | | | |
| | | | | | | |
| | | | | | | |
| | | | | | | |
| | | | | | | |
| | | | | | | |
| | | | | | | |
| | | | | | | |
| | | | | | | |

# ▲ ETIQUETTES PORTUGAL
# PORTUGAL LABELS



| Rep. | Désignation | Designation | Specification | Qty | Code | Up to / jusqu'à |
|---|---|---|---|---|---|---|
| O1 | CONSIGNES UTILISATION | « OPERATING INSTRUCTIONS » | POR | 1 | 3078149690 | |
| A3 | PLAQUE CONSTRUCTEUR | MANUFACTURERS PLATE | POR | 1 | 307P219000 | |

# ▲ ETIQUETTES SUÈDE



| Rep. | Désignation | Designation | Specification | Qty | Code | Up to / jusqu'à |
|---|---|---|---|---|---|---|
| O1 | CONSIGNES UTILISATION | « OPERATING INSTRUCTIONS » | SU | 1 | 3078149700 | |
| A3 | PLAQUE CONSTRUCTEUR | MANUFACTURERS PLATE | SU | 1 | 307P219010 | |
| | | | | | | |
| | | | | | | |
| | | | | | | |
| | | | | | | |
| | | | | | | |
| | | | | | | |
| | | | | | | |
| | | | | | | |
| | | | | | | |
| | | | | | | |
| | | | | | | |
| | | | | | | |
| | | | | | | |
| | | | | | | |
| | | | | | | |
| | | | | | | |
| | | | | | | |
| | | | | | | |
| | | | | | | |
| | | | | | | |
| | | | | | | |
| | | | | | | |
| | | | | | | |
| | | | | | | |

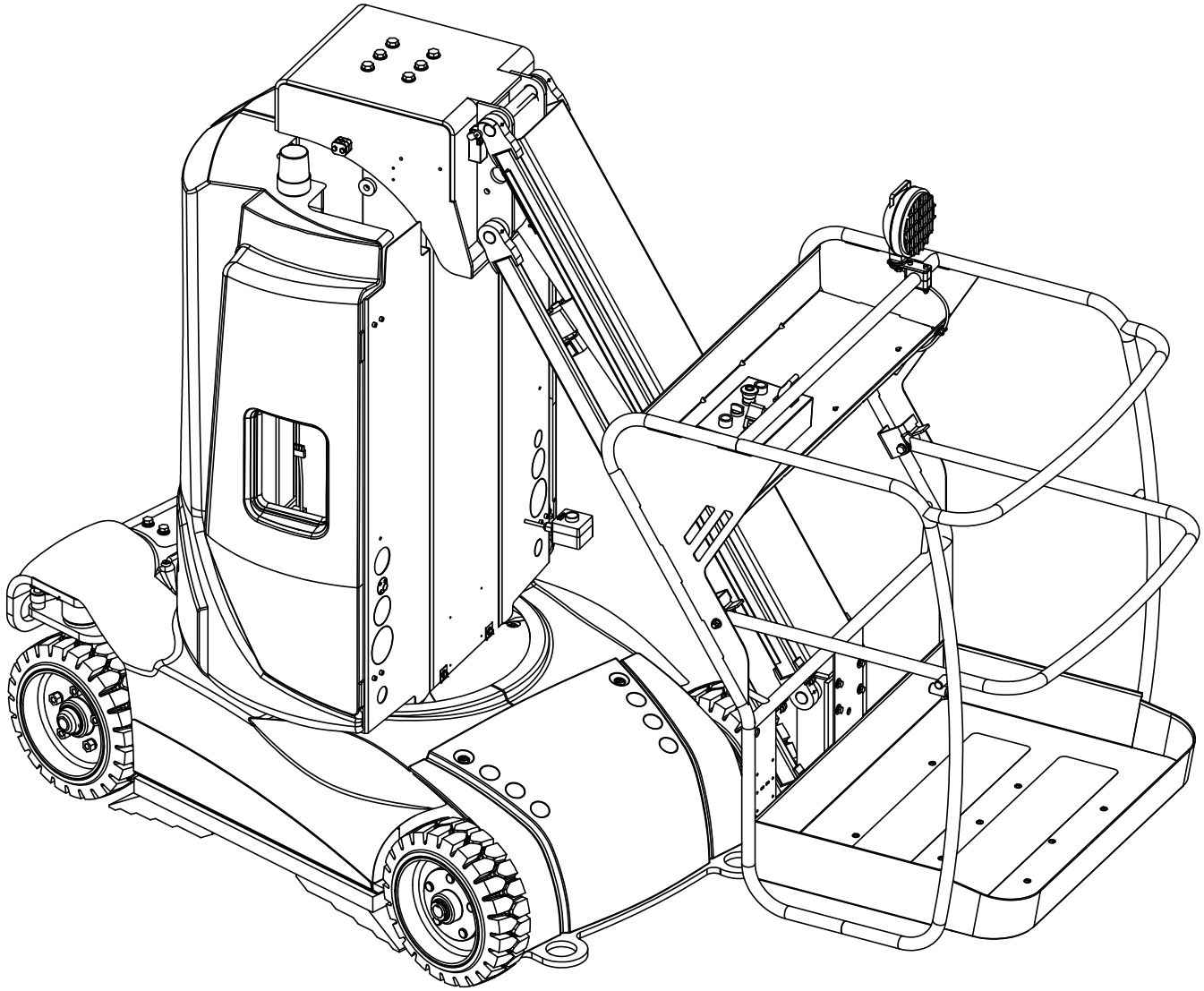

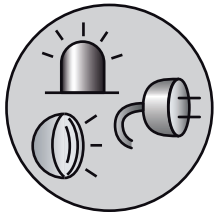

155-5

# ▲ OPTIONS
# OPTIONS

◀ G ▶

| Rep. | Désignation | Designation | Specification | Up to / jusqu'à |
|---|---|---|---|---|
| 1 | OPTION BATTERIE TRACTION | TRACTION BATTERY OPTION | | |
| 2 | OPTION ANNEAUX D'ARRIMAGE | | | |
| 3 | OPTION MOU DE CHAINES | | | |
| 18 | OPTION AIR COMPRIMÉ | COMPRESSED AIR OPTION | | |
| 46 | OPTION FEU A ÉCLATS | FLASHING LIGHTS OPTION | | |
| 48 | OPTION REMPLIS. CENTRALI | | | |
| 74 | OPTION TÉLÉ-CDE FREIN | | | |
| 77 | OPTION BATTERIE GEL | GEL BATTERY OPTION | | |
| 89 | OPTION DISJONT. DIFF. | DIFFERENTIAL CIRCUIT BREAKER | 220 V | |
| 93 | OPTION CHARGEUR | CHARGER OPTION | 110 V | |
| 95 | OPTION USA | USA OPTION | USA | |
| 23A | OPTION ALIM EN NACELLE | POWER SUPPLY LIFTING DEVICE OPTION | 110 V USA | |
| 23B | OPTION ALIM EN NACELLE | POWER SUPPLY LIFTING DEVICE OPTION | 115 V CE | |
| 23C | OPTION ALIM EN NACELLE | POWER SUPPLY LIFTING DEVICE OPTION | 220 V DE | |
| 23D | OPTION ALIM EN NACELLE | POWER SUPPLY LIFTING DEVICE OPTION | 220 V UK | |
| 23E | OPTION ALIM EN NACELLE | POWER SUPPLY LIFTING DEVICE OPTION | 220 V AUS | |
| 23F | OPTION ALIM EN NACELLE | POWER SUPPLY LIFTING DEVICE OPTION | 220 V CE | |
| 23G | OPTION ALIM EN NACELLE | POWER SUPPLY LIFTING DEVICE OPTION | 220 V FR | |
| 23H | OPTION ALIM EN NACELLE | POWER SUPPLY LIFTING DEVICE OPTION | 220 V SWI | |
| 95A | OPTION SANS PESAGE | OPTION WITHOUT WEITHING | USA | |
| 100 | OPTION RUSSE ET UKRAINE | OPTION RUSSIA AND UKRAINE | | |
| | | | | |
| | | | | |
| | | | | |
| | | | | |
| | | | | |

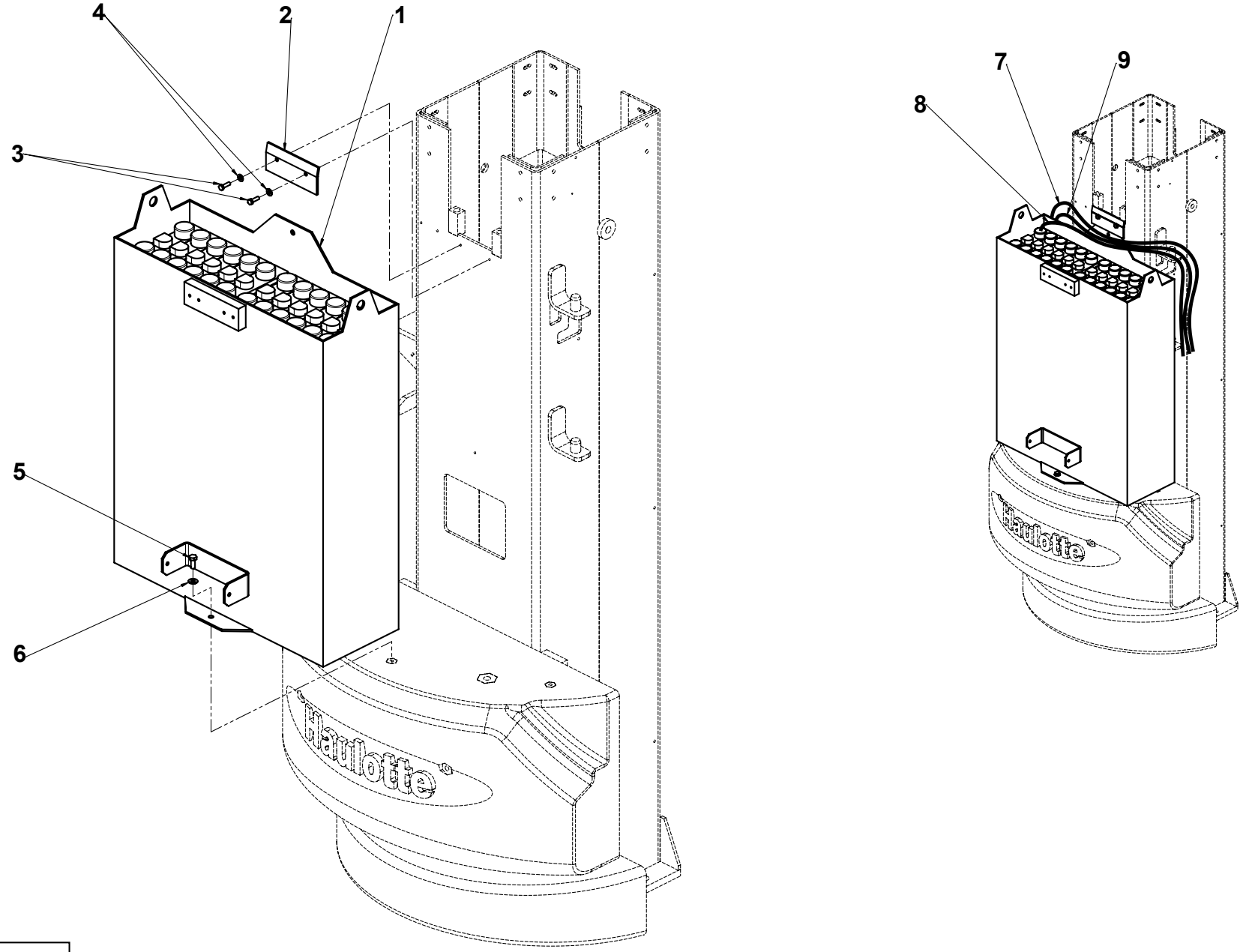


155P292290.A

# ▲ OPTION BATTERIE TRACTION
# TRACTION BATTERY OPTION



| Rep. | Désignation | Designation | Specification | Qty | Code | Up to / jusqu'à |
|---|---|---|---|---|---|---|
| 1 | COFFRE A BATTERIE | BATTERY BOX | 280 AH | 1 | 2901007760 | |
| 2 | BRIDE DE FIXATION | FASTENING FLANGE | | 1 | 155P267000 | |
| 3 | VIS | SCREW | H M6X20-20 CL.8.8 ZB | 1 | 2331231330 | |
| 4 | RONDELLE CONIQUE STRIÉE | RIDGED CONICAL WASHER | M 6 ZB | 1 | 2351902840 | |
| 5 | VIS | SCREW | H M8X20-20 CL.8.8 ZB | 1 | 2331231420 | |
| 6 | RONDELLE CONIQUE STRIÉE | RIDGED CONICAL WASHER | M 8 ZB | 1 | 2351902850 | |
| 7 | FAISCEAU | BUNDLE | 1X40MM², COSSES Ø8 | 1 | 155P291810 | |
| 8 | FAISCEAU | BUNDLE | 1X40MM², COSSES Ø8 & 10 | 1 | 155P291820 | |
| 9 | FAISCEAU | BUNDLE | 1X40MM² COSSES Ø8 | 1 | 155P291830 | |

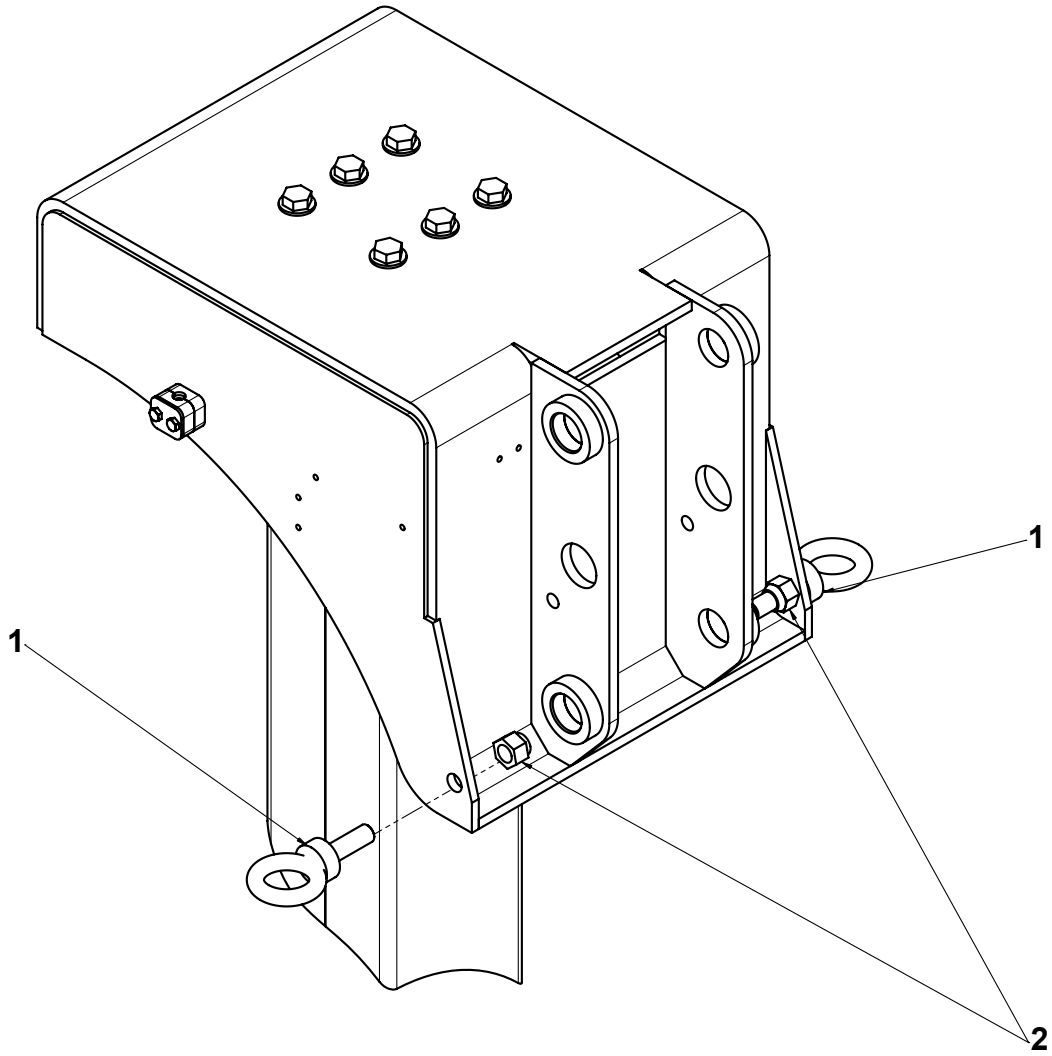


155P288810.C

# ▲ OPTION ANNEAUX D'ARRIMAGE



| Rep. | Désignation | Designation | Specification | Qty | Code | Up to / jusqu'à |
|---|---|---|---|---|---|---|
| 1 | ANNEAU | RING | | 1 | 2420103550 | |
| 2 | ECROU AUTOFREINÉ | | H FR M16 CL. 8 ZB | 1 | 2349221540 | |

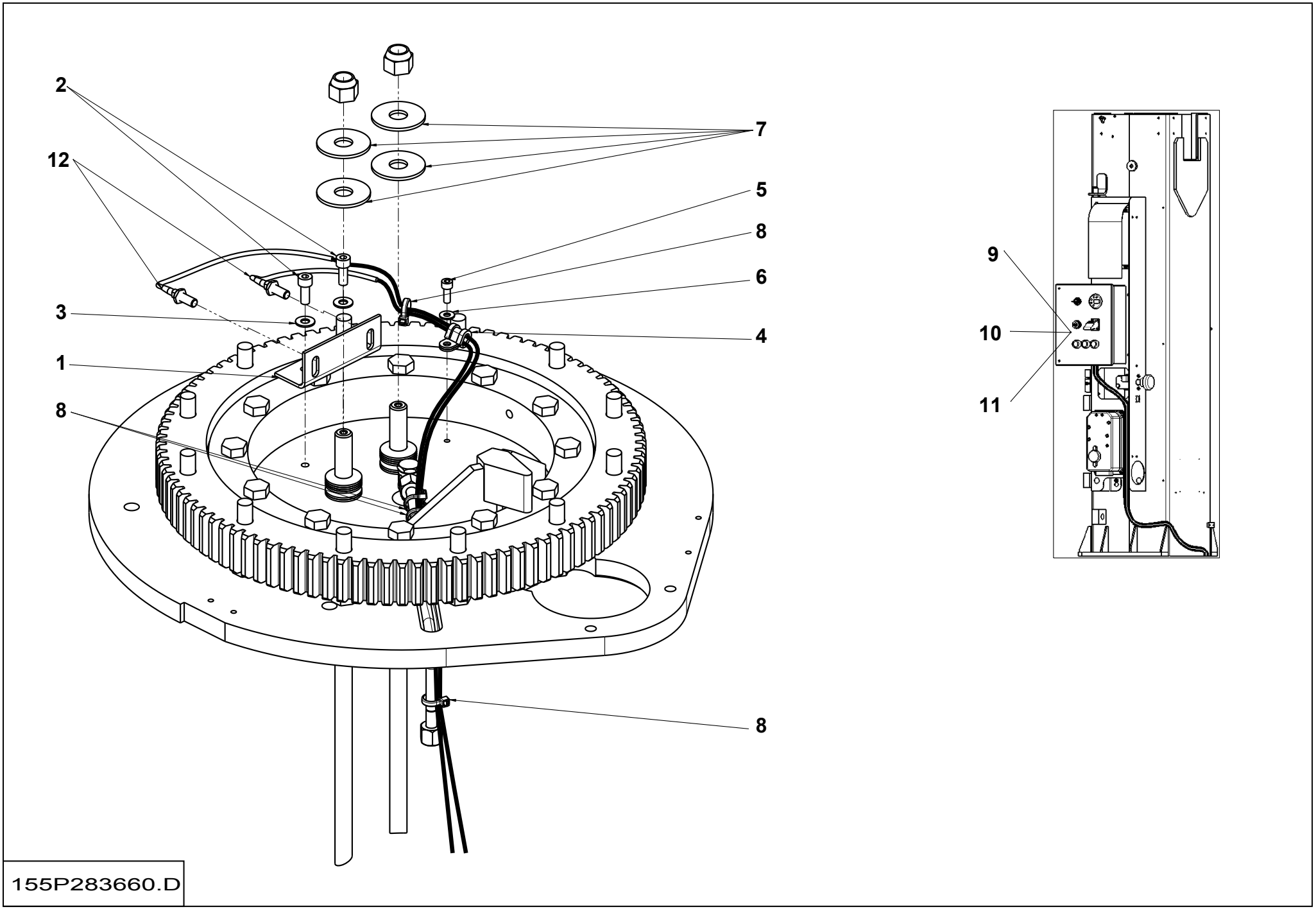
2
12
7
5
8
6
3
4
1
8
8
9
10
11
155P283660.D

# ▲ OPTION MOU DE CHAINES
# CHAIN SLACK OPTION



| Rep. | Désignation | Designation | Specification | Qty | Code | Up to / jusqu'à |
|---|---|---|---|---|---|---|
| 1 | PATTE SUPPORT | SUPPORT LUG | | 1 | 155P283670 | |
| 2 | VIS | SCREW | CHC M8X20-20 CL.8,8 ZB | 2 | 2308231690 | |
| 3 | RONDELLE CONIQUE STRIÉE | RIDGED CONICAL WASHER | M 8 ZB | 2 | 2351902850 | |
| 4 | COLLIER DE FIXATION | CABLE CLIP | Ø6 X 15 | 1 | 2389001500 | |
| 5 | VIS | SCREW | CHC M6X16-16 CL.8.8 ZB | 1 | 2308231480 | |
| 6 | RONDELLE CONIQUE STRIÉE | RIDGED CONICAL WASHER | M 6 ZB | 1 | 2351902840 | |
| 7 | RONDELLE PLATE | FLAT WASHER | LL 16 ZB | 4 | 2351124130 | |
| 8 | COLLIER POLYAMIDE 6/6 4. | | | 4 | 2389002870 | |
| 9 | CONNECTEUR | CONNECTOR | | 1 | 2901007240 | |
| 10 | COSSE | LUG | | 2 | 2440313150 | |
| 11 | COSSES A LANGUETTE | LUG TERMINALS | | 1 | 2440313090 | |
| 12 | DETECTEUR DE PROXIMITE | PROXIMITY DETECTOR | Ø8 PNP-NO | 2 | 2901001070 | |
| | | | | | | |
| | | | | | | |
| | | | | | | |
| | | | | | | |
| | | | | | | |
| | | | | | | |
| | | | | | | |
| | | | | | | |
| | | | | | | |
| | | | | | | |
| | | | | | | |
| | | | | | | |
| | | | | | | |
| | | | | | | |

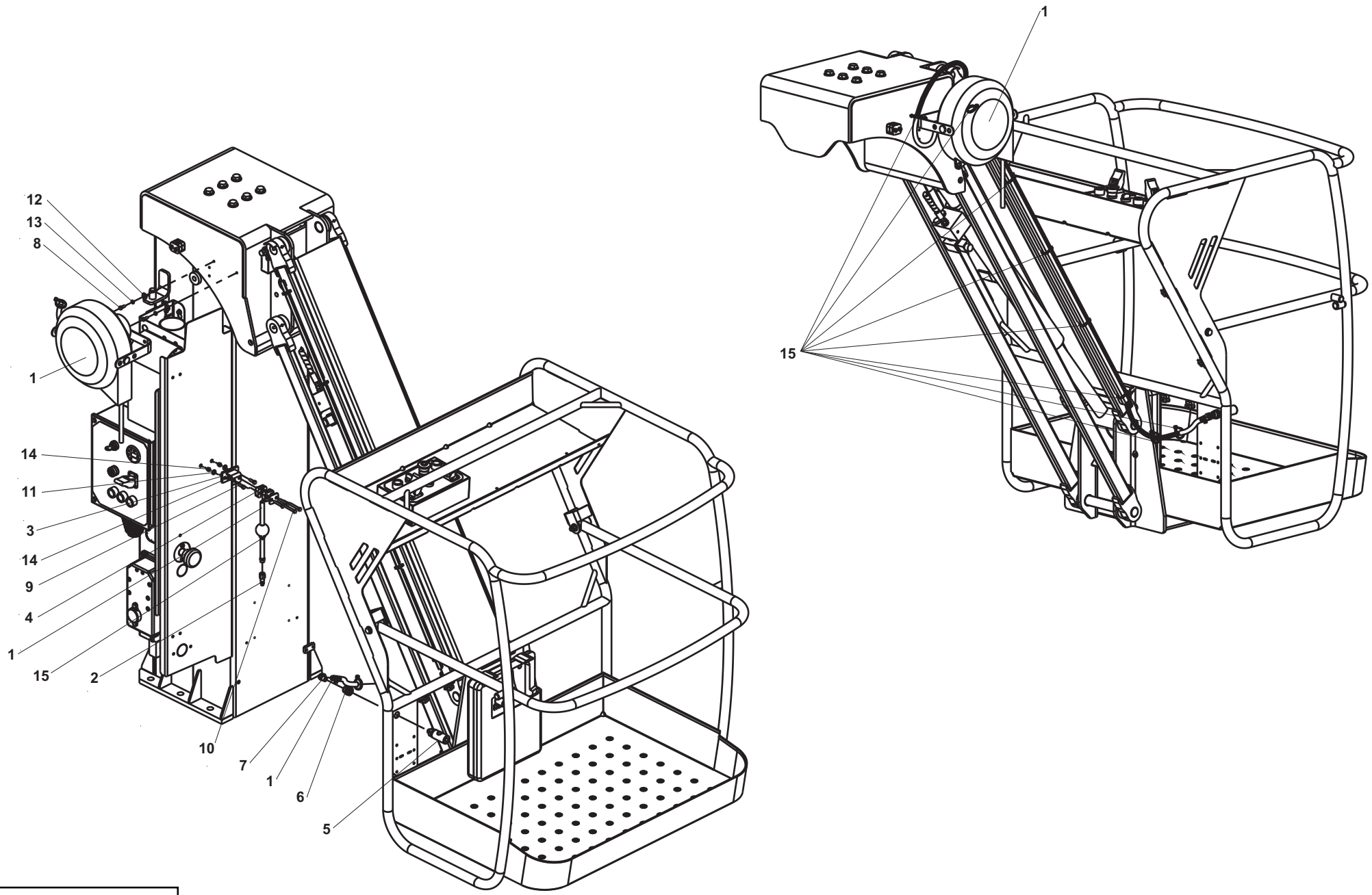


155P243120.B

# ▲ OPTION AIR COMPRIMÉ
# COMPRESSED AIR OPTION



| Rep. | Désignation | Designation | Specification | Qty | Code | Up to / jusqu'à |
|---|---|---|---|---|---|---|
| 1 | ENROULEUR | WINDER | Ø7.5 12BAR LG 10M | 1 | 2420505840 | |
| 2 | EMBOUT | END FITTING | | 1 | 2420506550 | |
| 3 | PATTE SUPPORT CÂBLE | | | 1 | 153D158660 | |
| 4 | COLLIER DE FIXATION | CABLE CLIP | Ø11 | 1 | 2389003080 | |
| 5 | COUPLEUR | COUPLING | 1/4" BSPP | 1 | 2420319380 | |
| 6 | TRAVERSÉE DE CLOISON | BULKHEAD CONNECTOR | F-F, 1/4" BSPP, | 1 | 2422005520 | |
| 7 | COUDE | BEND | 90° M-F 1/4" BSPP | 1 | 2369199220 | |
| 8 | VIS | SCREW | H M6X16-16 CL.8.8 ZB | 2 | 2331231310 | |
| 9 | VIS | SCREW | H M6X20-20 CL.8.8 ZB | 2 | 2331231330 | |
| 10 | VIS | SCREW | H M6X45-18 CL.8.8 ZB | 2 | 2301231470 | |
| 11 | RONDELLE PLATE | FLAT WASHER | M 6 ZB | 2 | 2351112050 | |
| 12 | RONDELLE PLATE | FLAT WASHER | L 6 ZB | 2 | 2351123050 | |
| 13 | RONDELLE ÉLASTIQUE | RUBBER WASHER | W 6 ZB | 2 | 2351201050 | |
| 14 | ECROU AUTOFREINÉ | | H FR M6 CL. 8 ZB | 4 | 2349221490 | |
| 15 | COLLIER POLYAMIDE 6/6 4. | | | 9 | 2389002870 | |
| | | | | | | |
| | | | | | | |
| | | | | | | |
| | | | | | | |
| | | | | | | |
| | | | | | | |
| | | | | | | |
| | | | | | | |
| | | | | | | |
| | | | | | | |
| | | | | | | |

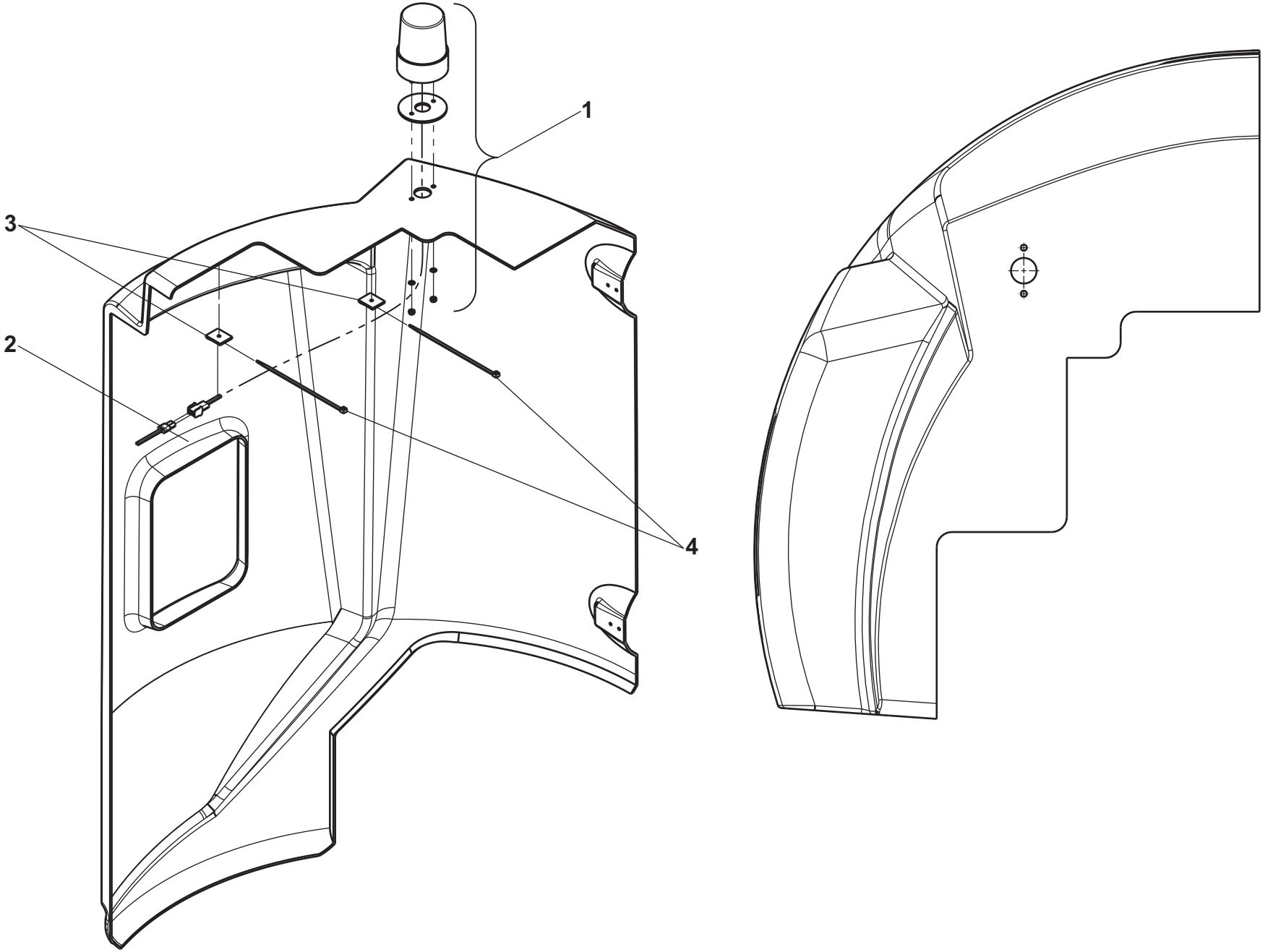


155P243230.A

# ▲ OPTION FEU A ÉCLATS
# FLASHING LIGHTS OPTION



| Rep. | Désignation | Designation | Specification | Qty | Code | Up to / jusqu'à |
|---|---|---|---|---|---|---|
| 1 | FEU À ÉCLAT | | 5W | 1 | 118D169700 | |
| 2 | FAISCEAU FEU À ÉCLAT | | | 1 | 155P255610 | |
| 3 | SOCLE ADHÉSIF | | | 2 | 2441904220 | |
| 4 | COLLIER POLYAMIDE 6/6 4. | | | 2 | 2389002870 | |

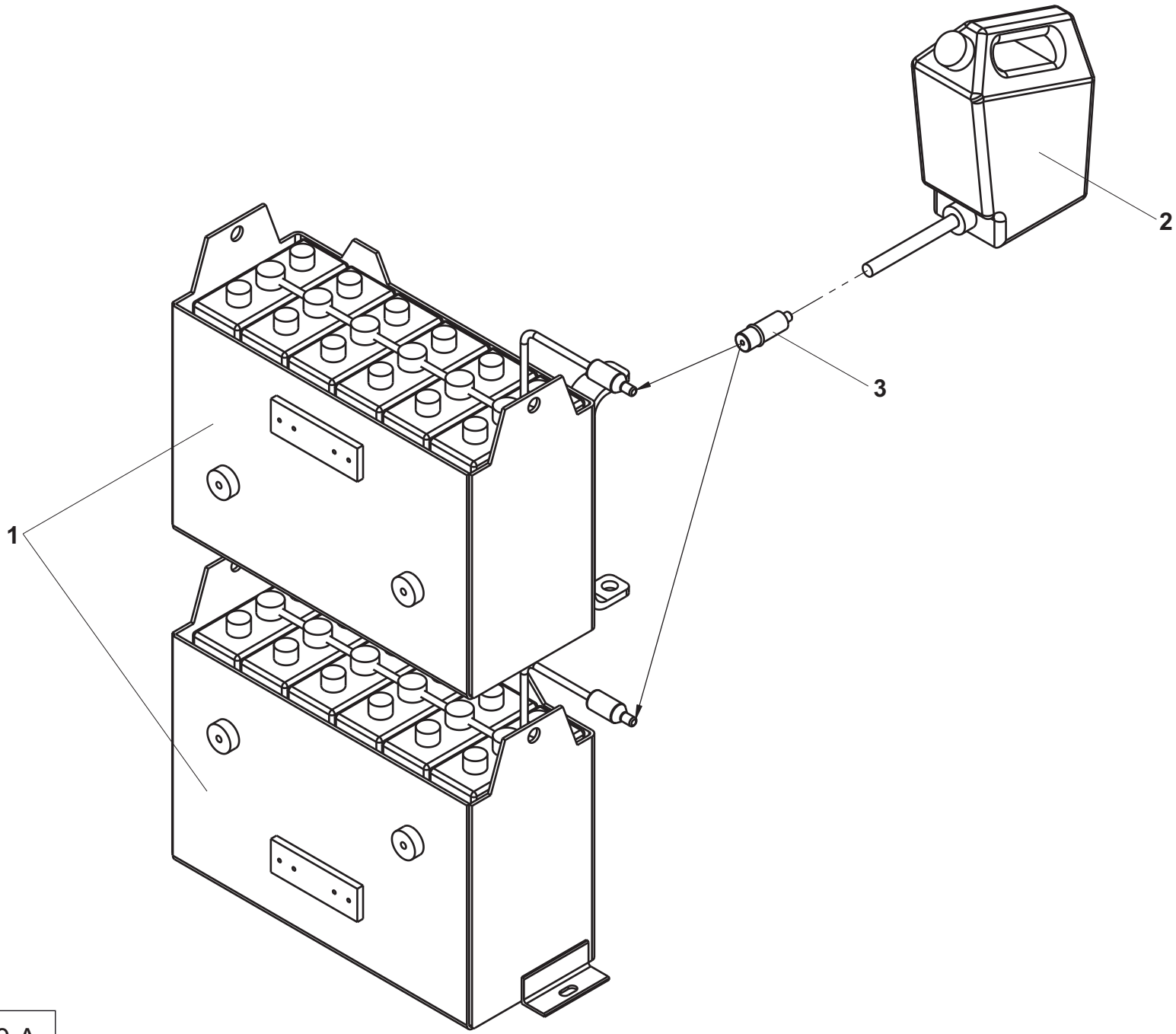


155P243250.A

# ▲ OPTION REMPLIS. CENTRALI



| Rep. | Désignation | Designation | Specification | Qty | Code | Up to / jusqu'à |
|---|---|---|---|---|---|---|
| 1 | BATTERIE AVEC KIT | BATTERY WITH KIT | | 1 | 2421101790 | |
| 2 | BIDON | CAN | | 1 | 2441210560 | |
| 3 | RACCORD RAPIDE | RAPID FASTENER | | 1 | 2441807250 | |
| | | | | | | |
| | | | | | | |
| | | | | | | |
| | | | | | | |
| | | | | | | |
| | | | | | | |
| | | | | | | |
| | | | | | | |
| | | | | | | |
| | | | | | | |
| | | | | | | |
| | | | | | | |
| | | | | | | |
| | | | | | | |
| | | | | | | |
| | | | | | | |
| | | | | | | |
| | | | | | | |
| | | | | | | |
| | | | | | | |
| | | | | | | |
| | | | | | | |
| | | | | | | |
| | | | | | | |

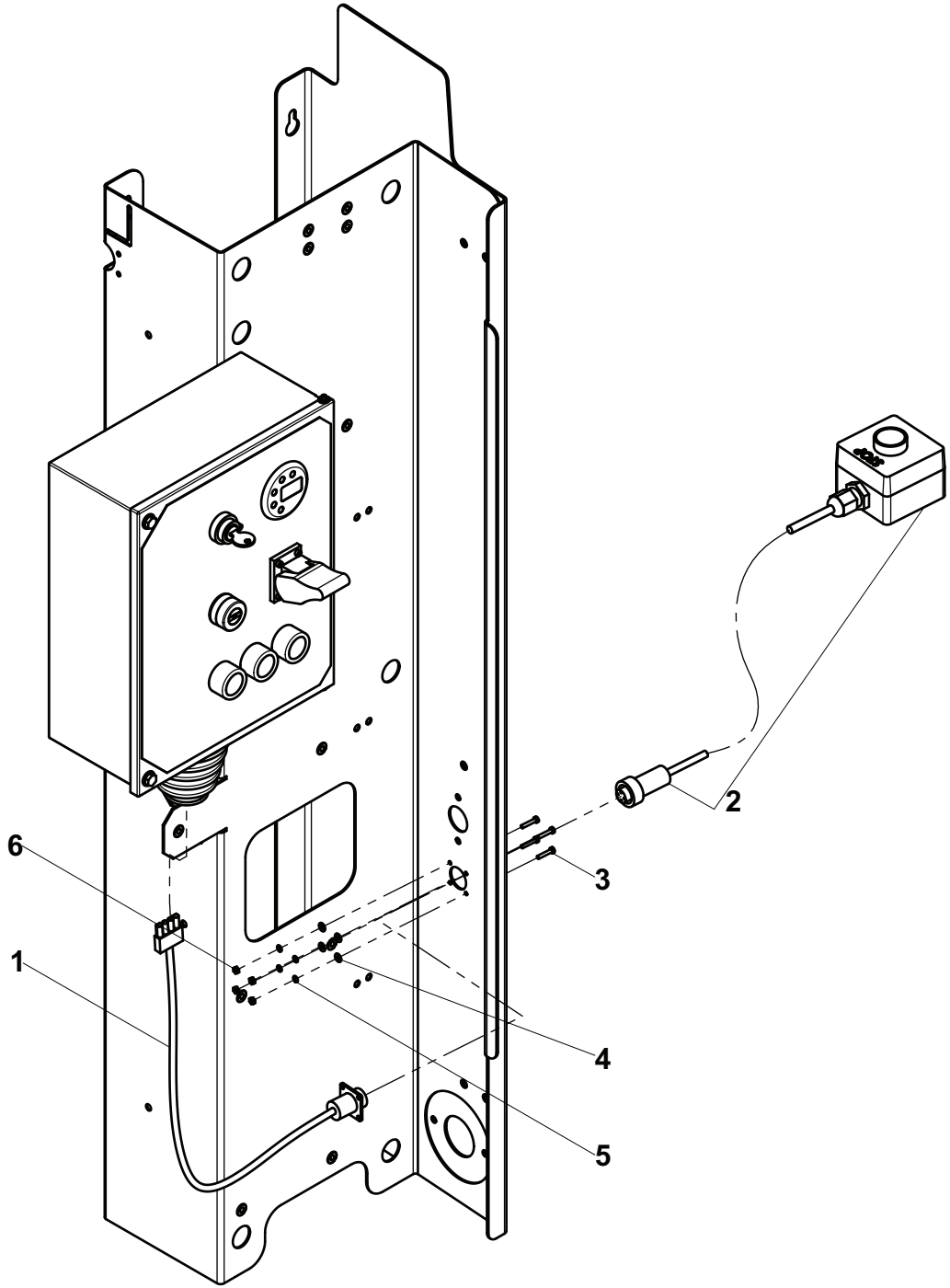


155P243260.C

# ▲ OPTION TÉLÉ-CDE FREIN



| Rep. | Désignation | Designation | Specification | Qty | Code | Up to / jusqu'à |
|---|---|---|---|---|---|---|
| 1 | FAISCEAU RALLONGE | EXTENSION BUNDLE | | 1 | 155P255640 | |
| 2 | FAISCEAU TÉLÉCOMMANDE | | | 1 | 154P202600 | |
| 3 | VIS | SCREW | CS M3X16 CL. 4.8 ZB | 4 | 2306331540 | |
| 4 | RONDELLE PLATE | FLAT WASHER | M 3 ZB | 4 | 2351112010 | |
| 5 | RONDELLE À DENTS | | DEC 3 ZB | 4 | 2351301030 | |
| 6 | ECROU | NUT | H M3 CL. 8 ZB | 4 | 2341221010 | |

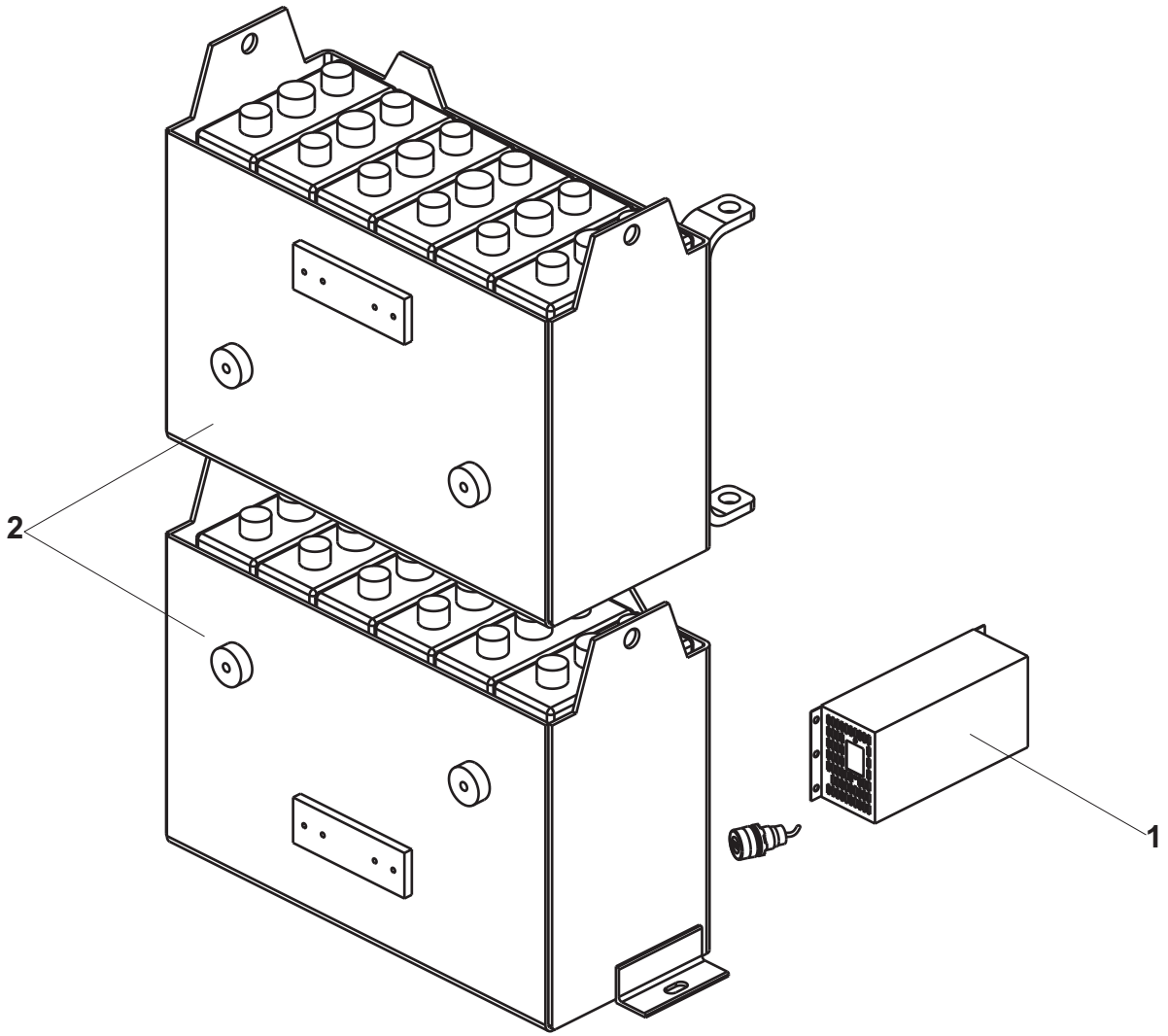


155P243200.B

# ▲ OPTION BATTERIE GEL
# GEL BATTERY OPTION



| Rep. | Désignation | Designation | Specification | Qty | Code | Up to / jusqu'à |
|---|---|---|---|---|---|---|
| 1 | CHARGEUR BATTERIE ÉTANCH | | 220V 24V 30A | 1 | 2440316850 | |
| 2 | ENS. BATTERIE TRACTION | TRACTION BATTERY ASSEMBLY | 24V 240AH | 1 | 2440208620 | |

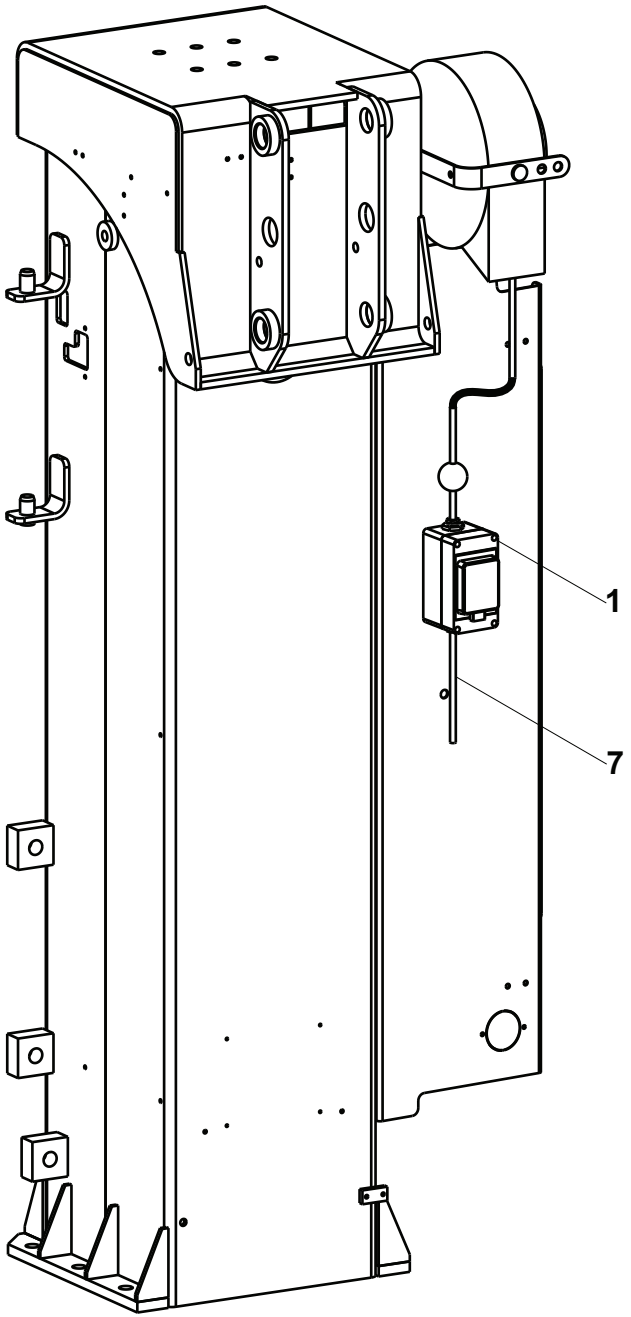


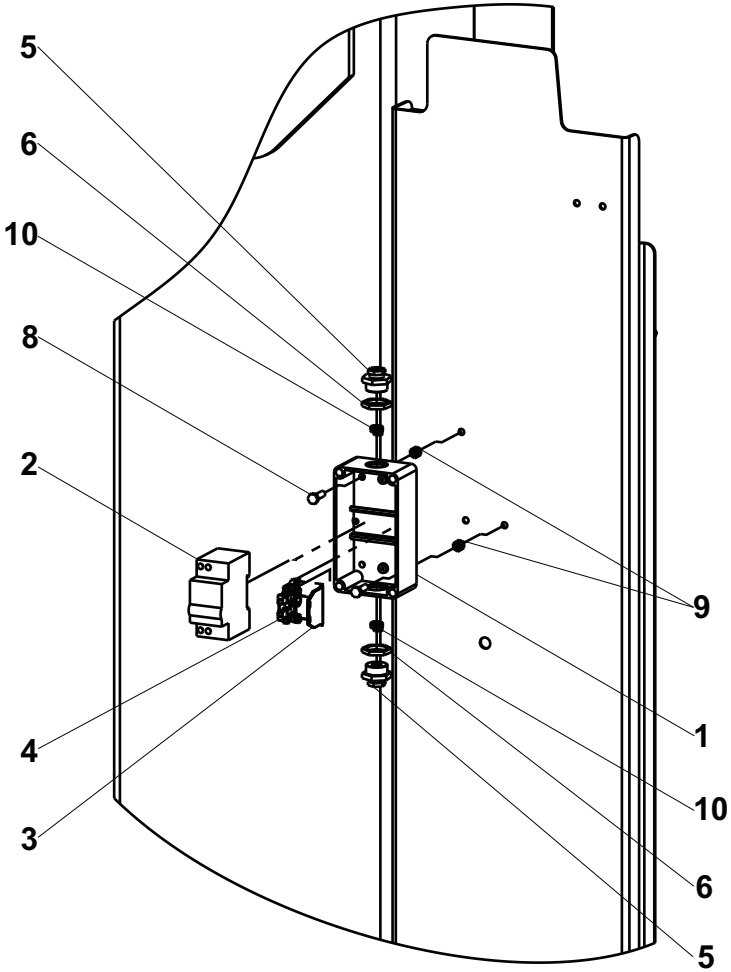


155P243220.B

# ▲ OPTION DISJONT. DIFF.
# DIFFERENTIAL CIRCUIT BREAKER OPTION



| Rep. | Désignation | Designation | Specification | Qty | Code | Up to / jusqu'à |
|---|---|---|---|---|---|---|
| 1 | COFFRET | BOX | | 1 | 2440302230 | |
| 2 | DISJONCTEUR DIFFÉRENTIEL | | 16A - 30 MA | 1 | 2440402040 | |
| 3 | BLOC CLOISON TERMINALE | TERMINAL PARTITION BLOCK | | 1 | 2440215160 | |
| 4 | BLOC JONCTION DE TERRE | GROUND INTERFACE BLOCK | | 1 | 2440215150 | |
| 5 | PRESSE-ÉTOUPE RÉDUCTEUR | REDUCER PACKING BOX | 16/9 | 2 | 2441613020 | |
| 6 | CONTRE-ÉCROU | | | 2 | 2420302030 | |
| 7 | CABLE | CABLE | 3G 2,5MM2 | 1 | 2440311750 | |
| 8 | VIS | SCREW | H M6X20-20 CL.8.8 ZB | 2 | 2331231330 | |
| 9 | ECROU AUTOFREINÉ | | H FR M6 CL. 8 ZB | 2 | 2349221490 | |
| 10 | COLLIER POLYAMIDE 6/6 4. | | | 2 | 2389002870 | |
| | | | | | | |
| | | | | | | |
| | | | | | | |
| | | | | | | |
| | | | | | | |
| | | | | | | |
| | | | | | | |
| | | | | | | |
| | | | | | | |
| | | | | | | |
| | | | | | | |
| | | | | | | |
| | | | | | | |
| | | | | | | |
| | | | | | | |
| | | | | | | |

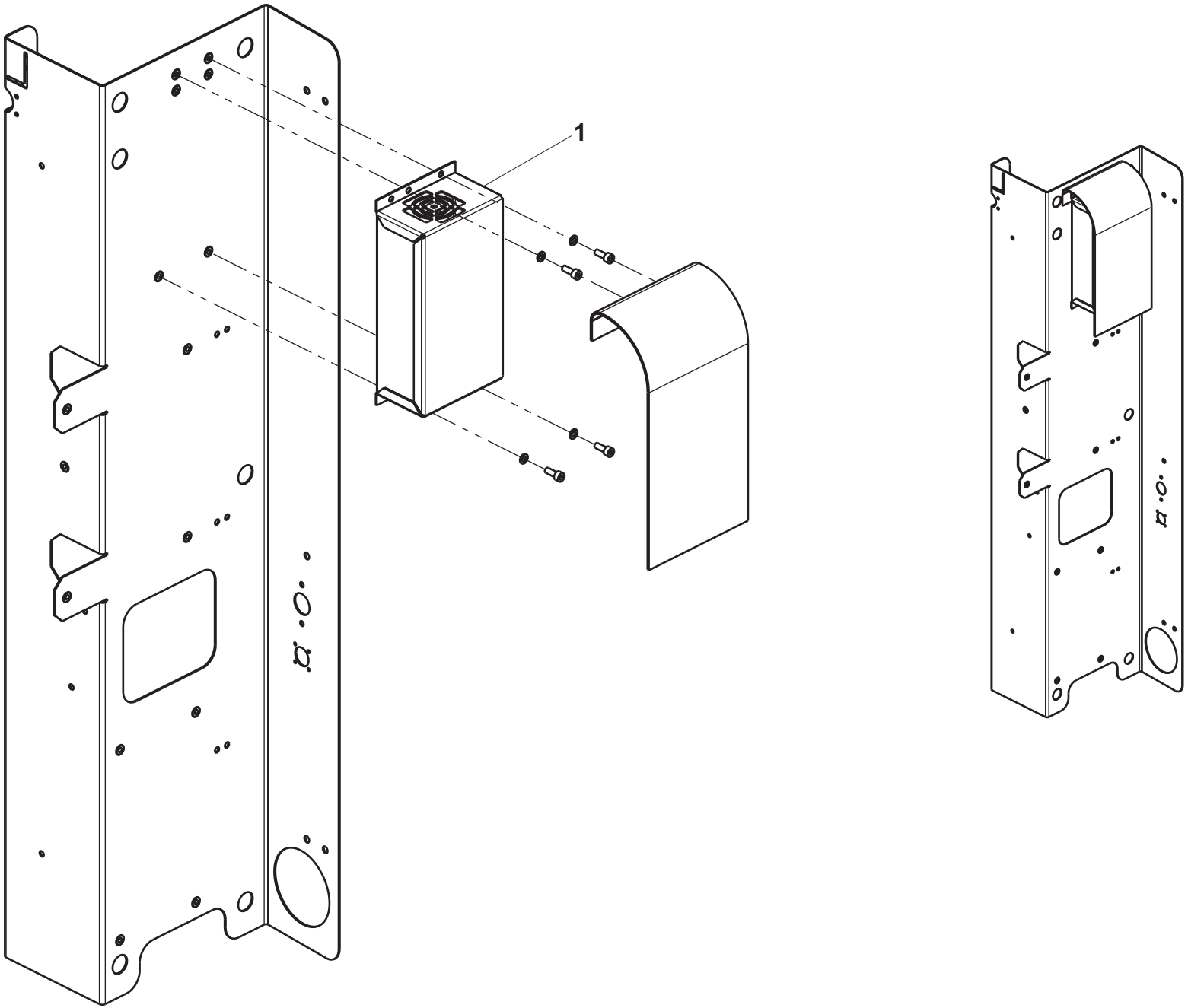


155P243210.A

# ▲ OPTION CHARGEUR 110V
# CHARGER OPTION 110V



| Rep. | Désignation | Designation | Specification | Qty | Code | Up to / jusqu'à |
|---|---|---|---|---|---|---|
| 1 | CHARGEUR BATTERIE | BATTERY CHARGER | 100V/24V-30A | 1 | 2440316690 | |

# ▲ OPTION USA
# USA OPTION



| Rep. | Désignation | Designation | Specification | Qty | Code | Up to / jusqu'à |
|---|---|---|---|---|---|---|
| 1 | ENS. COFFRET TOURELLE | LOWER BOX ASSEMBLY | SIMPLE | 1 | 155P258740 | |
| 2 | ENS. COFFRET NACELLE | UPPER BOX ASSEMBLY | USA | 1 | 155P258780 | |
| 3 | ENSEMBLE FAISCEAUX | BUNDLES | USA | 1 | 155P258940 | |
| 4 | VARIATEUR | VARIABLE SPEED UNIT | TRIPLAT FC2188 | 1 | 2901004370 | |

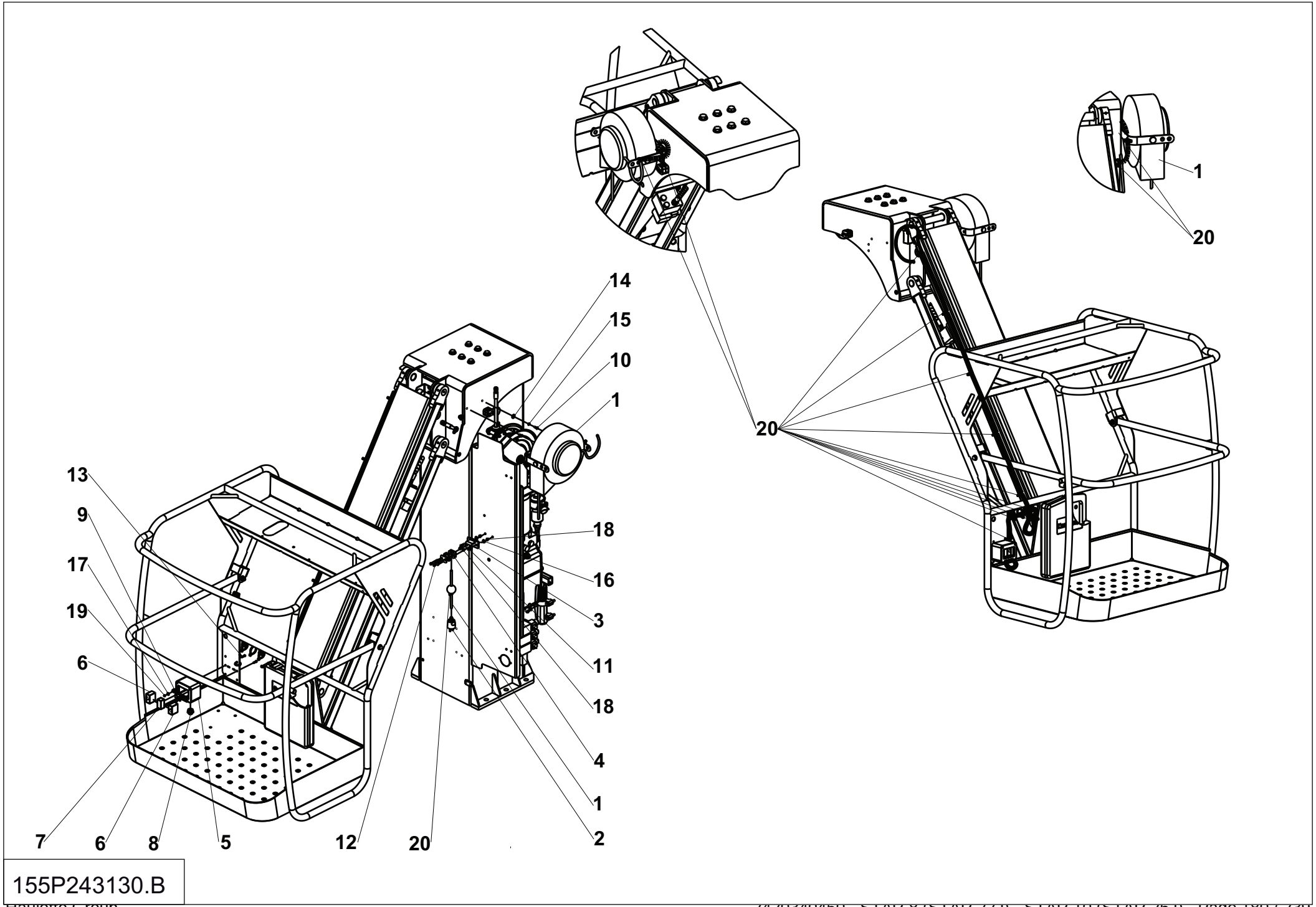


155P243130.B

# ▲ OPTION ALIM EN NACELLE
# POWER SUPPLY LIFTING DEVICE OPTION



| Rep. | Désignation | Designation | Specification | Qty | Code | Up to / jusqu'à |
|---|---|---|---|---|---|---|
| 1 | ENROULEUR | WINDER | 3G1,5 LG 10M | 1 | 2420505750 | |
| 2 | FICHE | PLUG | 2P+T USA | 1 | 2440603760 | |
| 3 | PATTE SUPPORT CÂBLE | | | 1 | 153D158660 | |
| 4 | COLLIER DE FIXATION | CABLE CLIP | Ø11 | 1 | 2389003080 | |
| 5 | BOÎTIER VIDE ÉTANCHE | | | 1 | 2440203790 | |
| 6 | MODULE | MODULE | PRISE 2P+T 15A 125V USA | 2 | 2441605180 | |
| 7 | MODULE OBTURATEUR | OBTURATOR MODULE | | 1 | 2441500040 | |
| 8 | PRESSE-ÉTOUPE RÉDUCTEUR | REDUCER PACKING BOX | 16/9 | 1 | 2441613020 | |
| 9 | CONTRE-ÉCROU | | | 1 | 2420302030 | |
| 10 | VIS | SCREW | H M6X16-16 CL.8.8 ZB | 2 | 2331231310 | |
| 11 | VIS | SCREW | H M6X20-20 CL.8.8 ZB | 2 | 2331231330 | |
| 12 | VIS | SCREW | H M6X45-18 CL.8.8 ZB | 2 | 2301231470 | |
| 13 | VIS | SCREW | H M5X16-16 CL.8.8 ZB | 2 | 2331231210 | |
| 14 | RONDELLE PLATE | FLAT WASHER | L 6 ZB | 2 | 2351123050 | |
| 15 | RONDELLE ÉLASTIQUE | RUBBER WASHER | W 6 ZB | 2 | 2351201050 | |
| 16 | RONDELLE PLATE | FLAT WASHER | M 6 ZB | 2 | 2351112050 | |
| 17 | RONDELLE CONIQUE STRIÉE | RIDGED CONICAL WASHER | M 5 ZB | 2 | 2351902820 | |
| 18 | ECROU AUTOFREINÉ | | H FR M6 CL. 8 ZB | 4 | 2349221490 | |
| 19 | ECROU | NUT | H M5 CL. 8 ZB | 2 | 2341221040 | |
| 20 | COLLIER POLYAMIDE 6/6 4. | | | 15 | 2389002870 | |
| | | | | | | |
| | | | | | | |
| | | | | | | |
| | | | | | | |
| | | | | | | |
| | | | | | | |

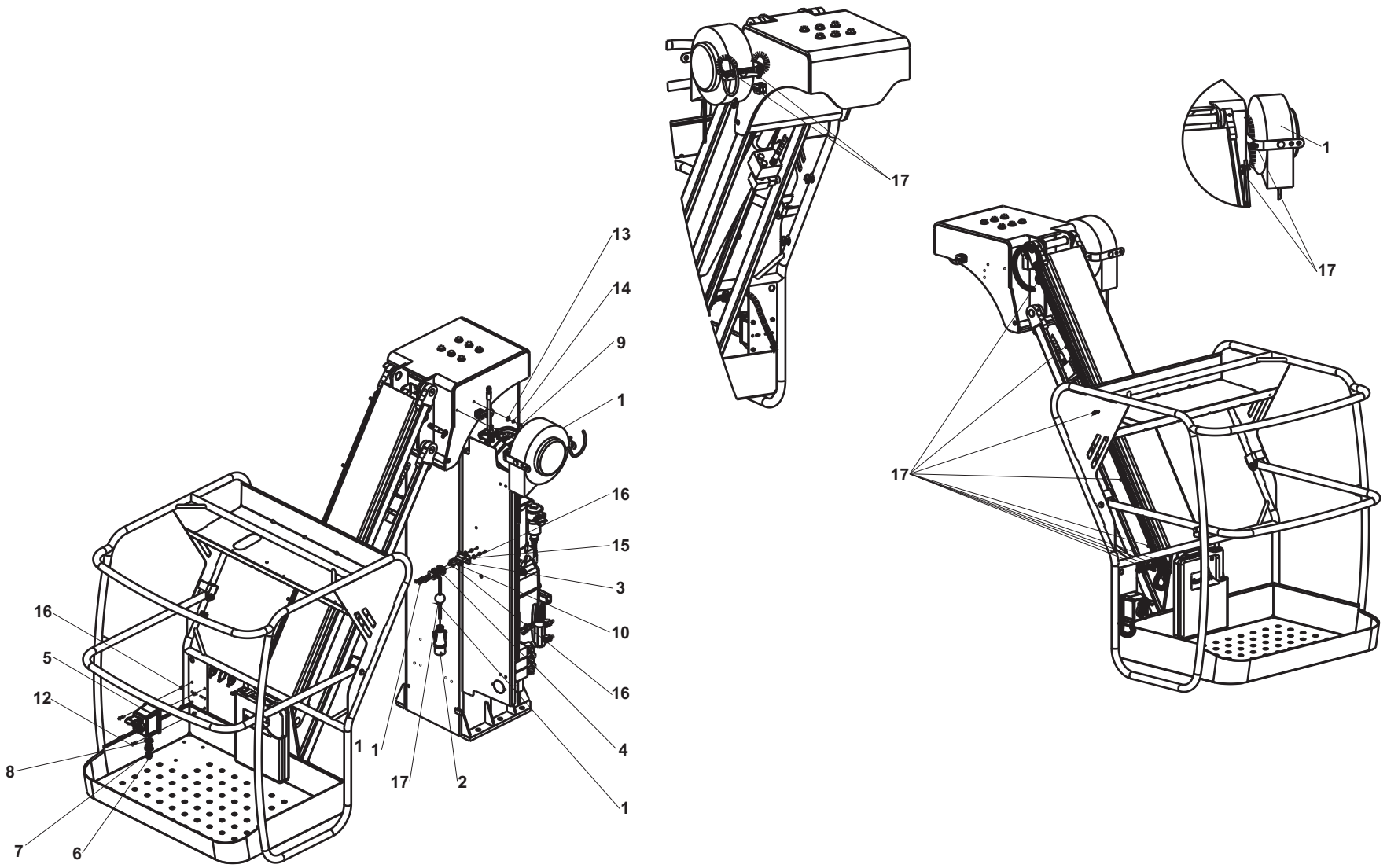


155P243140.B

# ▲ OPTION ALIM EN NACELLE
# POWER SUPPLY LIFTING DEVICE OPTION



| Rep. | Désignation | Designation | Specification | Qty | Code | Up to / jusqu'à |
|---|---|---|---|---|---|---|
| 1 | ENROULEUR | WINDER | 3G1,5 LG 10M | 1 | 2420505750 | |
| 2 | FICHE | PLUG | 2P+T 16A-115V | 1 | 2440603940 | |
| 3 | PATTE SUPPORT CÂBLE | | | 1 | 153D158660 | |
| 4 | COLLIER DE FIXATION | CABLE CLIP | Ø11 | 1 | 2389003080 | |
| 5 | SOCLE | BASE | 2P+T 16A-115V | 1 | 2441904690 | |
| 6 | PRESSE-ÉTOUPE RÉDUCTEUR | REDUCER PACKING BOX | 16/9 | 1 | 2441613020 | |
| 7 | PRESSE-ÉTOUPE RÉDUCTEUR | REDUCER PACKING BOX | 21/16 | 1 | 2421802260 | |
| 8 | CONTRE-ÉCROU | | PG 21 | 1 | 2440314130 | |
| 9 | VIS | SCREW | H M6X16-16 CL.8.8 ZB | 2 | 2331231310 | |
| 10 | VIS | SCREW | H M6X20-20 CL.8.8 ZB | 2 | 2331231330 | |
| 11 | VIS | SCREW | H M6X45-18 CL.8.8 ZB | 2 | 2301231470 | |
| 12 | VIS | SCREW | H M6X25-25 CL.8.8 ZB | 4 | 2331231340 | |
| 13 | RONDELLE PLATE | FLAT WASHER | L 6 ZB | 2 | 2351123050 | |
| 14 | RONDELLE ÉLASTIQUE | RUBBER WASHER | W 6 ZB | 2 | 2351201050 | |
| 15 | RONDELLE PLATE | FLAT WASHER | M 6 ZB | 2 | 2351112050 | |
| 16 | ECROU AUTOFREINÉ | | H FR M6 CL. 8 ZB | 8 | 2349221490 | |
| 17 | COLLIER POLYAMIDE 6/6 4. | | | 13 | 2389002870 | |
| | | | | | | |
| | | | | | | |
| | | | | | | |
| | | | | | | |
| | | | | | | |
| | | | | | | |
| | | | | | | |
| | | | | | | |
| | | | | | | |

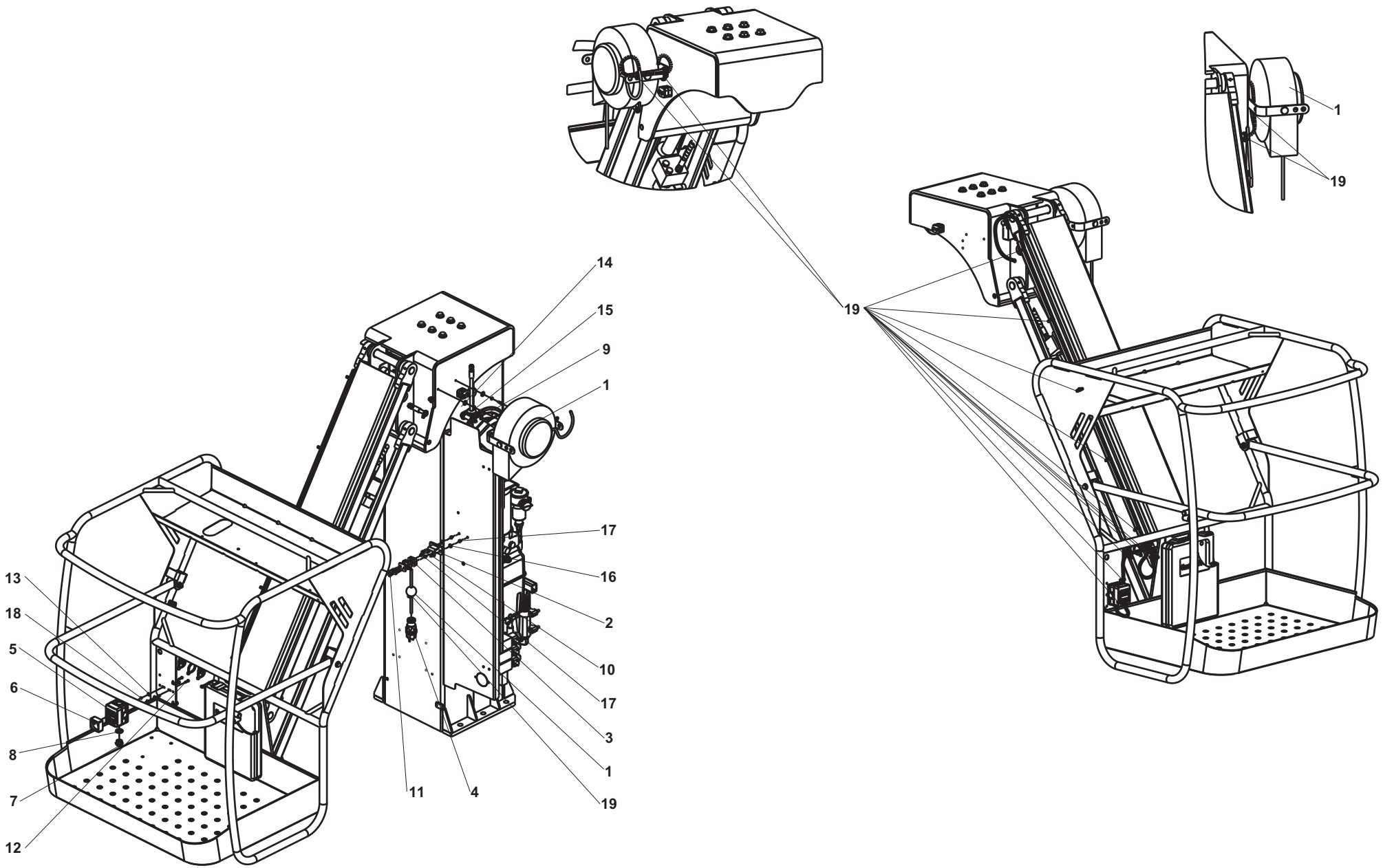


155P243150.B

# ▲ OPTION ALIM EN NACELLE
# POWER SUPPLY LIFTING DEVICE OPTION



| Rep. | Désignation | Designation | Specification | Qty | Code | Up to / jusqu'à |
|---|---|---|---|---|---|---|
| 1 | ENROULEUR | WINDER | 3G1,5 LG 10M | 1 | 2420505750 | |
| 2 | PATTE SUPPORT CÂBLE | | | 1 | 153D158660 | |
| 3 | COLLIER DE FIXATION | CABLE CLIP | Ø11 | 1 | 2389003080 | |
| 4 | FICHE | PLUG | | 1 | 2440603970 | |
| 5 | BOÎTIER | | | 1 | 2440203650 | |
| 6 | PRISE | PLUG SOCKET | 2P+T-16A | 1 | 2441605060 | |
| 7 | PRESSE-ÉTOUPE RÉDUCTEUR | REDUCER PACKING BOX | 16/9 | 1 | 2441613020 | |
| 8 | CONTRE-ÉCROU | | | 1 | 2420302030 | |
| 9 | VIS | SCREW | H M6X16-16 CL.8.8 ZB | 2 | 2331231310 | |
| 10 | VIS | SCREW | H M6X20-20 CL.8.8 ZB | 2 | 2331231330 | |
| 11 | VIS | SCREW | H M6X45-18 CL.8.8 ZB | 2 | 2301231470 | |
| 12 | VIS | SCREW | H M5X16-16 CL.8.8 ZB | 2 | 2331231210 | |
| 13 | RONDELLE CONIQUE STRIÉE | RIDGED CONICAL WASHER | M 5 ZB | 2 | 2351902820 | |
| 14 | RONDELLE PLATE | FLAT WASHER | L 6 ZB | 2 | 2351123050 | |
| 15 | RONDELLE ÉLASTIQUE | RUBBER WASHER | W 6 ZB | 2 | 2351201050 | |
| 16 | RONDELLE PLATE | FLAT WASHER | M 6 ZB | 2 | 2351112050 | |
| 17 | ECROU AUTOFREINÉ | | H FR M6 CL. 8 ZB | 4 | 2349221490 | |
| 18 | ECROU | NUT | H M5 CL. 8 ZB | 2 | 2341221040 | |
| 19 | COLLIER POLYAMIDE 6/6 4. | | | 15 | 2389002870 | |
| | | | | | | |
| | | | | | | |
| | | | | | | |
| | | | | | | |
| | | | | | | |
| | | | | | | |
| | | | | | | |

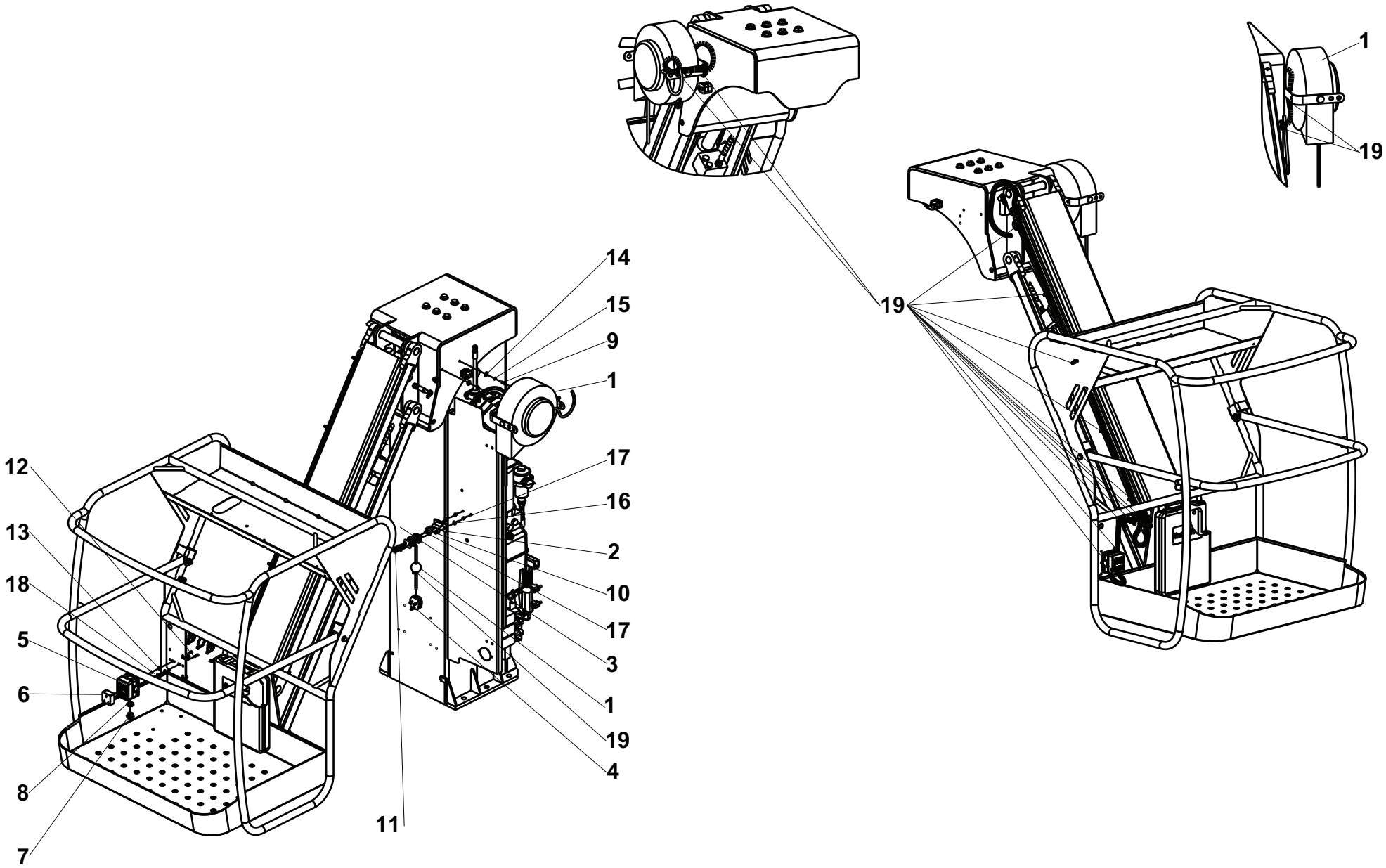


155P243160.B

# ▲ OPTION ALIM EN NACELLE
# POWER SUPPLY LIFTING DEVICE OPTION



| Rep. | Désignation | Designation | Specification | Qty | Code | Up to / jusqu'à |
|---|---|---|---|---|---|---|
| 1 | ENROULEUR | WINDER | 3G1,5 LG 10M | 1 | 2420505750 | |
| 2 | PATTE SUPPORT CÂBLE | | | 1 | 153D158660 | |
| 3 | COLLIER DE FIXATION | CABLE CLIP | Ø11 | 1 | 2389003080 | |
| 4 | FICHE | PLUG | 13A | 1 | 2440603750 | |
| 5 | BOÎTIER | | | 1 | 2440203650 | |
| 6 | PRISE | PLUG SOCKET | 2P+T-13A | 1 | 2441605070 | |
| 7 | PRESSE-ÉTOUPE RÉDUCTEUR | REDUCER PACKING BOX | 16/9 | 1 | 2441613020 | |
| 8 | CONTRE-ÉCROU | | | 1 | 2420302030 | |
| 9 | VIS | SCREW | H M6X16-16 CL.8.8 ZB | 2 | 2331231310 | |
| 10 | VIS | SCREW | H M6X20-20 CL.8.8 ZB | 2 | 2331231330 | |
| 11 | VIS | SCREW | H M6X45-18 CL.8.8 ZB | 2 | 2301231470 | |
| 12 | VIS | SCREW | H M5X16-16 CL.8.8 ZB | 2 | 2331231210 | |
| 13 | RONDELLE CONIQUE STRIÉE | RIDGED CONICAL WASHER | M 5 ZB | 2 | 2351902820 | |
| 14 | RONDELLE PLATE | FLAT WASHER | L 6 ZB | 2 | 2351123050 | |
| 15 | RONDELLE ÉLASTIQUE | RUBBER WASHER | W 6 ZB | 2 | 2351201050 | |
| 16 | RONDELLE PLATE | FLAT WASHER | M 6 ZB | 2 | 2351112050 | |
| 17 | ECROU AUTOFREINÉ | | H FR M6 CL. 8 ZB | 4 | 2349221490 | |
| 18 | ECROU | NUT | H M5 CL. 8 ZB | 2 | 2341221040 | |
| 19 | COLLIER POLYAMIDE 6/6 4. | | | 15 | 2389002870 | |
| | | | | | | |
| | | | | | | |
| | | | | | | |
| | | | | | | |
| | | | | | | |
| | | | | | | |
| | | | | | | |

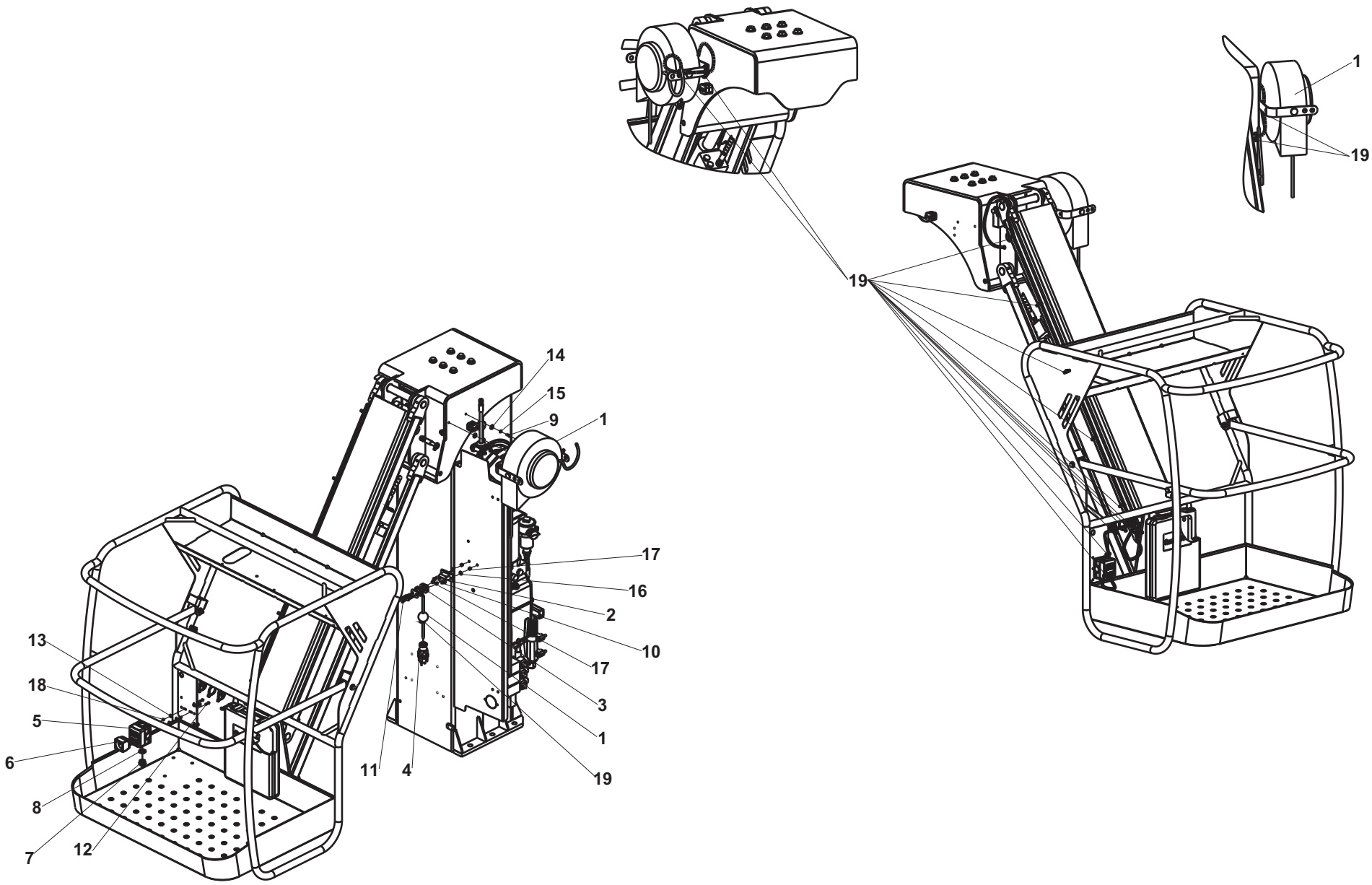


155P243170.B

# ▲ OPTION ALIM EN NACELLE
# POWER SUPPLY LIFTING DEVICE OPTION



| Rep. | Désignation | Designation | Specification | Qty | Code | Up to / jusqu'à |
|---|---|---|---|---|---|---|
| 1 | ENROULEUR | WINDER | 3G1,5 LG 10M | 1 | 2420505750 | |
| 2 | PATTE SUPPORT CÂBLE | | | 1 | 153D158660 | |
| 3 | COLLIER DE FIXATION | CABLE CLIP | Ø11 | 1 | 2389003080 | |
| 4 | FICHE | PLUG | | 1 | 2440603970 | |
| 5 | BOÎTIER | | | 1 | 2440203650 | |
| 6 | PRISE 220V | PLUG SOCKET | 2P+T-16A | 1 | 2441605540 | |
| 7 | PRESSE-ÉTOUPE RÉDUCTEUR | REDUCER PACKING BOX | 16/9 | 1 | 2441613020 | |
| 8 | CONTRE-ÉCROU | | | 1 | 2420302030 | |
| 9 | VIS | SCREW | H M6X16-16 CL.8.8 ZB | 2 | 2331231310 | |
| 10 | VIS | SCREW | H M6X20-20 CL.8.8 ZB | 2 | 2331231330 | |
| 11 | VIS | SCREW | H M6X45-18 CL.8.8 ZB | 2 | 2301231470 | |
| 12 | VIS | SCREW | H M5X16-16 CL.8.8 ZB | 2 | 2331231210 | |
| 13 | RONDELLE CONIQUE STRIÉE | RIDGED CONICAL WASHER | M 5 ZB | 2 | 2351902820 | |
| 14 | RONDELLE PLATE | FLAT WASHER | L 6 ZB | 2 | 2351123050 | |
| 15 | RONDELLE ÉLASTIQUE | RUBBER WASHER | W 6 ZB | 2 | 2351201050 | |
| 16 | RONDELLE PLATE | FLAT WASHER | M 6 ZB | 2 | 2351112050 | |
| 17 | ECROU AUTOFREINÉ | | H FR M6 CL. 8 ZB | 4 | 2349221490 | |
| 18 | ECROU | NUT | H M5 CL. 8 ZB | 2 | 2341221040 | |
| 19 | COLLIER POLYAMIDE 6/6 4. | | | 15 | 2389002870 | |
| | | | | | | |
| | | | | | | |
| | | | | | | |
| | | | | | | |
| | | | | | | |
| | | | | | | |
| | | | | | | |

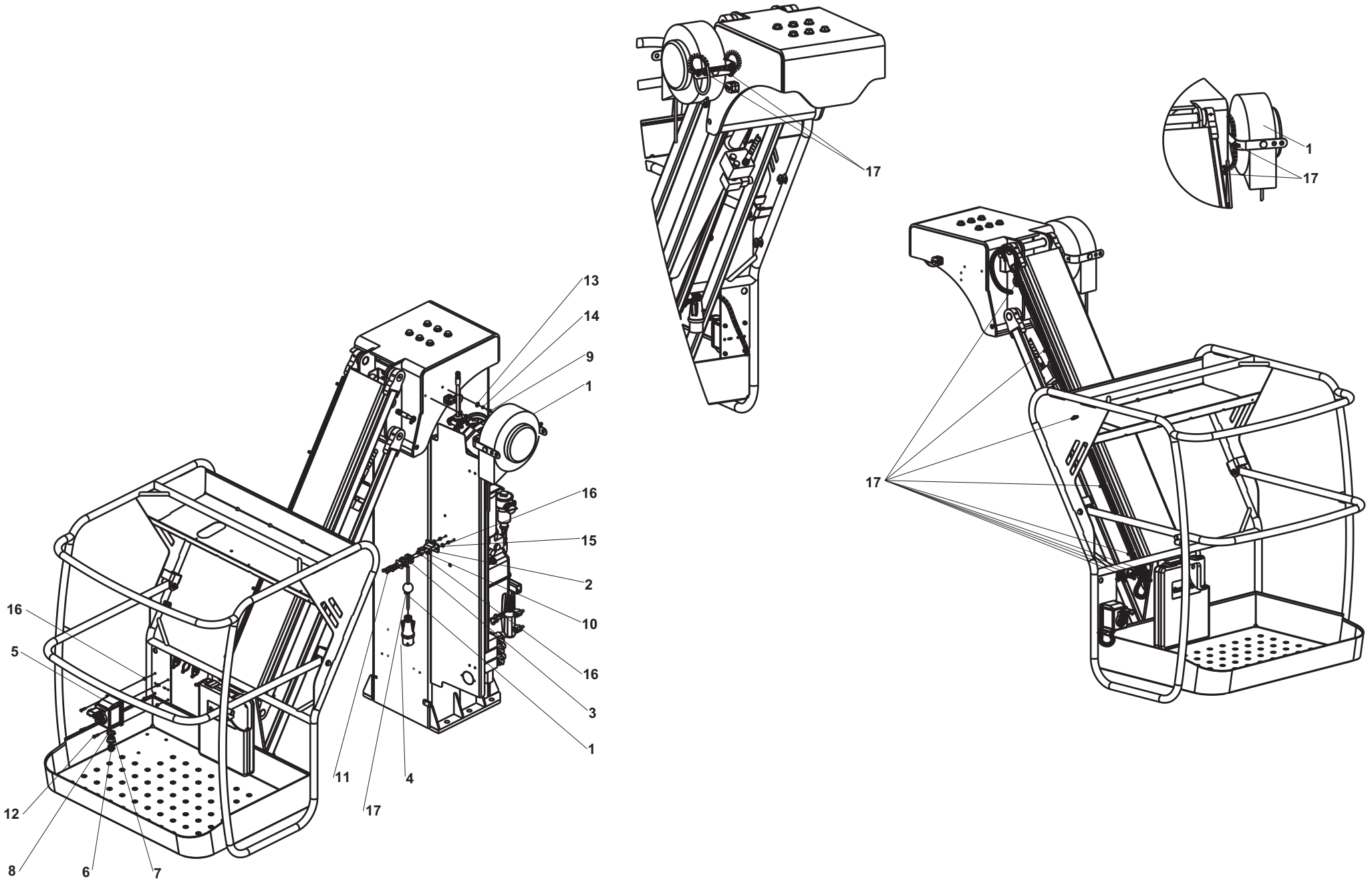


155P243180.B

# ▲ OPTION ALIM EN NACELLE
# POWER SUPPLY LIFTING DEVICE OPTION



| Rep. | Désignation | Designation | Specification | Qty | Code | Up to / jusqu'à |
|---|---|---|---|---|---|---|
| 1 | ENROULEUR | WINDER | 3G1,5 LG 10M | 1 | 2420505750 | |
| 2 | PATTE SUPPORT CÂBLE | | | 1 | 153D158660 | |
| 3 | COLLIER DE FIXATION | CABLE CLIP | Ø11 | 1 | 2389003080 | |
| 4 | FICHE | PLUG | 16A 2P+T 220V | 1 | 2440603770 | |
| 5 | SOCLE | BASE | 2P+T 16A-220V | 1 | 2441904280 | |
| 6 | PRESSE-ÉTOUPE RÉDUCTEUR | REDUCER PACKING BOX | 16/9 | 1 | 2441613020 | |
| 7 | PRESSE-ÉTOUPE RÉDUCTEUR | REDUCER PACKING BOX | 21/16 | 1 | 2421802260 | |
| 8 | CONTRE-ÉCROU | | PG 21 | 1 | 2440314130 | |
| 9 | VIS | SCREW | H M6X16-16 CL.8.8 ZB | 2 | 2331231310 | |
| 10 | VIS | SCREW | H M6X20-20 CL.8.8 ZB | 2 | 2331231330 | |
| 11 | VIS | SCREW | H M6X45-18 CL.8.8 ZB | 2 | 2301231470 | |
| 12 | VIS | SCREW | H M6X25-25 CL.8.8 ZB | 4 | 2331231340 | |
| 13 | RONDELLE PLATE | FLAT WASHER | L 6 ZB | 2 | 2351123050 | |
| 14 | RONDELLE ÉLASTIQUE | RUBBER WASHER | W 6 ZB | 2 | 2351201050 | |
| 15 | RONDELLE PLATE | FLAT WASHER | M 6 ZB | 2 | 2351112050 | |
| 16 | ECROU AUTOFREINÉ | | H FR M6 CL. 8 ZB | 8 | 2349221490 | |
| 17 | COLLIER POLYAMIDE 6/6 4. | | | 13 | 2389002870 | |
| | | | | | | |
| | | | | | | |
| | | | | | | |
| | | | | | | |
| | | | | | | |
| | | | | | | |
| | | | | | | |
| | | | | | | |
| | | | | | | |

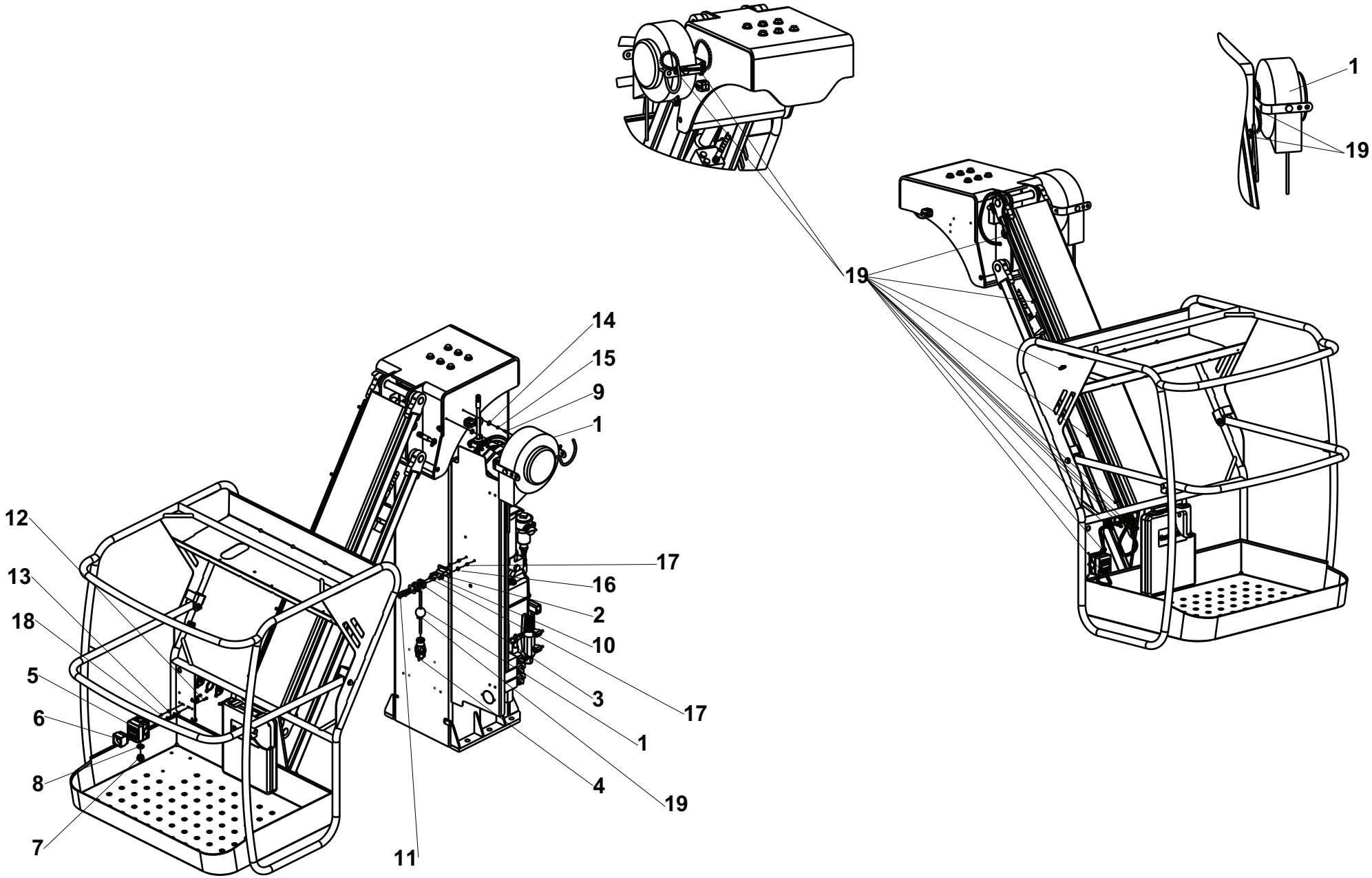


155P243190.B

# ▲ OPTION ALIM EN NACELLE
# POWER SUPPLY LIFTING DEVICE OPTION



| Rep. | Désignation | Designation | Specification | Qty | Code | Up to / jusqu'à |
|---|---|---|---|---|---|---|
| 1 | ENROULEUR | WINDER | 3G1,5 LG 10M | 1 | 2420505750 | |
| 2 | PATTE SUPPORT CÂBLE | | | 1 | 153D158660 | |
| 3 | COLLIER DE FIXATION | CABLE CLIP | Ø11 | 1 | 2389003080 | |
| 4 | FICHE | PLUG | | 1 | 2440603970 | |
| 5 | BOÎTIER | | | 1 | 2440203650 | |
| 6 | PRISE 220V | PLUG SOCKET | 2P+T-16A | 1 | 2441605540 | |
| 7 | PRESSE-ÉTOUPE RÉDUCTEUR | REDUCER PACKING BOX | 16/9 | 1 | 2441613020 | |
| 8 | CONTRE-ÉCROU | | | 1 | 2420302030 | |
| 9 | VIS | SCREW | H M6X16-16 CL.8.8 ZB | 2 | 2331231310 | |
| 10 | VIS | SCREW | H M6X20-20 CL.8.8 ZB | 2 | 2331231330 | |
| 11 | VIS | SCREW | H M6X45-18 CL.8.8 ZB | 2 | 2301231470 | |
| 12 | VIS | SCREW | H M5X16-16 CL.8.8 ZB | 2 | 2331231210 | |
| 13 | RONDELLE CONIQUE STRIÉE | RIDGED CONICAL WASHER | M 5 ZB | 2 | 2351902820 | |
| 14 | RONDELLE PLATE | FLAT WASHER | L 6 ZB | 2 | 2351123050 | |
| 15 | RONDELLE ÉLASTIQUE | RUBBER WASHER | W 6 ZB | 2 | 2351201050 | |
| 16 | RONDELLE PLATE | FLAT WASHER | M 6 ZB | 2 | 2351112050 | |
| 17 | ECROU AUTOFREINÉ | | H FR M6 CL. 8 ZB | 4 | 2349221490 | |
| 18 | ECROU | NUT | H M5 CL. 8 ZB | 2 | 2341221040 | |
| 19 | COLLIER POLYAMIDE 6/6 4. | | | 15 | 2389002870 | |
| | | | | | | |
| | | | | | | |
| | | | | | | |
| | | | | | | |
| | | | | | | |
| | | | | | | |
| | | | | | | |

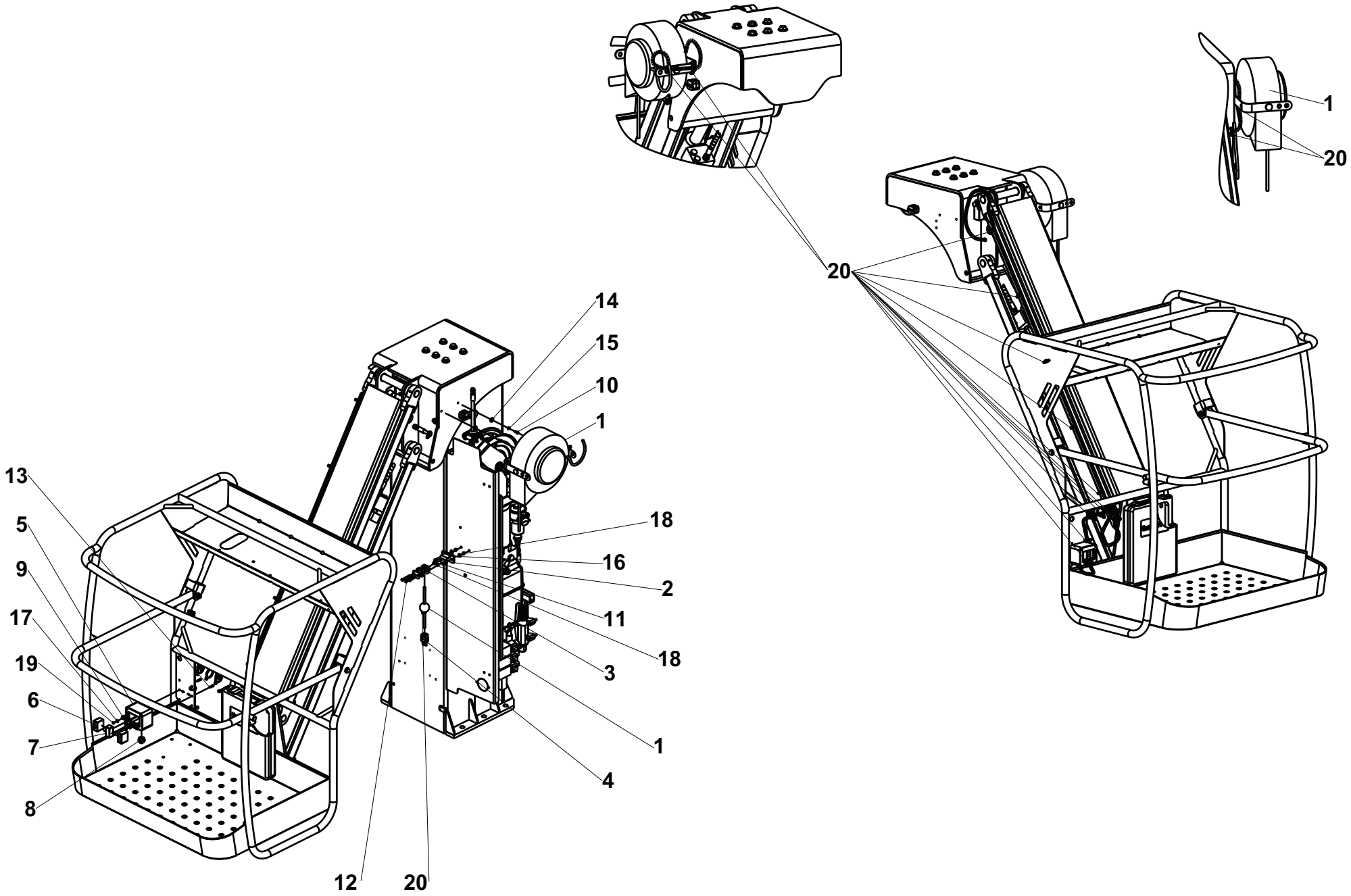


155P245820.B

# ▲ OPTION ALIM EN NACELLE
# POWER SUPPLY LIFTING DEVICE OPTION



| Rep. | Désignation | Designation | Specification | Qty | Code | Up to / jusqu'à |
|---|---|---|---|---|---|---|
| 1 | ENROULEUR | WINDER | 3G1,5 LG 10M | 1 | 2420505750 | |
| 2 | PATTE SUPPORT CÂBLE | | | 1 | 153D158660 | |
| 3 | COLLIER DE FIXATION | CABLE CLIP | Ø11 | 1 | 2389003080 | |
| 4 | FICHE | PLUG | 2P+T 16A SUISSE | 1 | 2440603950 | |
| 5 | BOÎTIER VIDE ÉTANCHE | | | 1 | 2440203790 | |
| 6 | MODULE | MODULE | PRISE 2P+T 10A-250V SUIS | 2 | 2901003710 | |
| 7 | MODULE OBTURATEUR | OBTURATOR MODULE | | 1 | 2441500040 | |
| 8 | PRESSE-ÉTOUPE RÉDUCTEUR | REDUCER PACKING BOX | 16/9 | 1 | 2441613020 | |
| 9 | CONTRE-ÉCROU | | | 1 | 2420302030 | |
| 10 | VIS | SCREW | H M6X16-16 CL.8.8 ZB | 2 | 2331231310 | |
| 11 | VIS | SCREW | H M6X20-20 CL.8.8 ZB | 2 | 2331231330 | |
| 12 | VIS | SCREW | H M6X45-18 CL.8.8 ZB | 2 | 2301231470 | |
| 13 | VIS | SCREW | H M5X16-16 CL.8.8 ZB | 2 | 2331231210 | |
| 14 | RONDELLE PLATE | FLAT WASHER | L 6 ZB | 2 | 2351123050 | |
| 15 | RONDELLE ÉLASTIQUE | RUBBER WASHER | W 6 ZB | 2 | 2351201050 | |
| 16 | RONDELLE PLATE | FLAT WASHER | M 6 ZB | 2 | 2351112050 | |
| 17 | RONDELLE CONIQUE STRIÉE | RIDGED CONICAL WASHER | M 5 ZB | 2 | 2351902820 | |
| 18 | ECROU AUTOFREINÉ | | H FR M6 CL. 8 ZB | 4 | 2349221490 | |
| 19 | ECROU | NUT | H M5 CL. 8 ZB | 2 | 2341221040 | |
| 20 | COLLIER POLYAMIDE 6/6 4. | | | 16 | 2389002870 | |
| | | | | | | |
| | | | | | | |
| | | | | | | |
| | | | | | | |
| | | | | | | |
| | | | | | | |

# ▲ OPTION SANS PESAGE



| Rep. | Désignation | Designation | Specification | Qty | Code | Up to / jusqu'à |
|---|---|---|---|---|---|---|
| 1 | ENS. COFFRET TOURELLE | LOWER BOX ASSEMBLY | SIMPLE | 1 | 155P258740 | |
| 2 | ENS. COFFRET NACELLE | UPPER BOX ASSEMBLY | SIMPLE | 1 | 155P258760 | |
| 3 | ENSEMBLE FAISCEAUX | BUNDLES | SIMPLE | 1 | 155P258950 | |

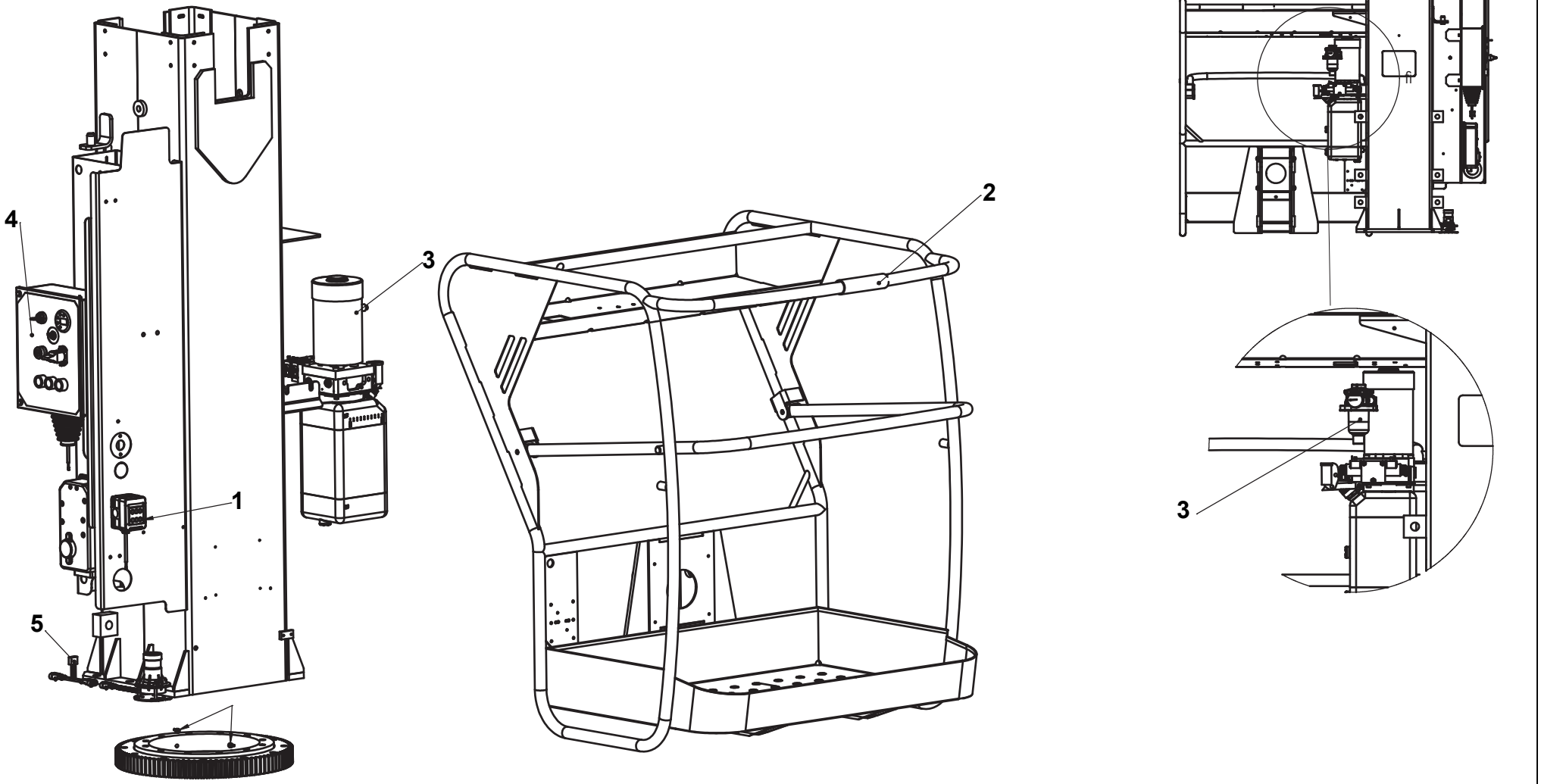


4000003310.A

# ▲ OPTION RUSSE ET UKRAINE
# OPTION RUSSIA AND UKRAINE



| Rep. | Désignation | Designation | Specification | Qty | Code | Up to / jusqu'à |
|---|---|---|---|---|---|---|
| **1** | **ALIMENTATION 24V** | **SUPPLY 24V** | | **1** | **4000014680** | **SEE DETAILS** |
| **2** | **GAINE SPIRALEE** | **SPIRAL SHEATH** | | **1** | **400015570** | **SEE DETAILS** |
| **3** | **FILTRE** | **FILTER** | | **1** | **4000014540** | **SEE DETAILS** |
| **4** | **COFFRET ELECTRIQUE** | **ELECTRICAL CABINET** | | **1** | **4000014790** | **SEE DETAILS** |
| 5 | FAISCEAU CAPTEUR T° | LOOM T°SENSOR | | 1 | 4000010290 | |
| 6 | BOUCHON | PLUG | | 1 | 2420301180 | |
| **7** | **ETIQUETTES** | **LABELS** | | | | **SEE DETAILS** |

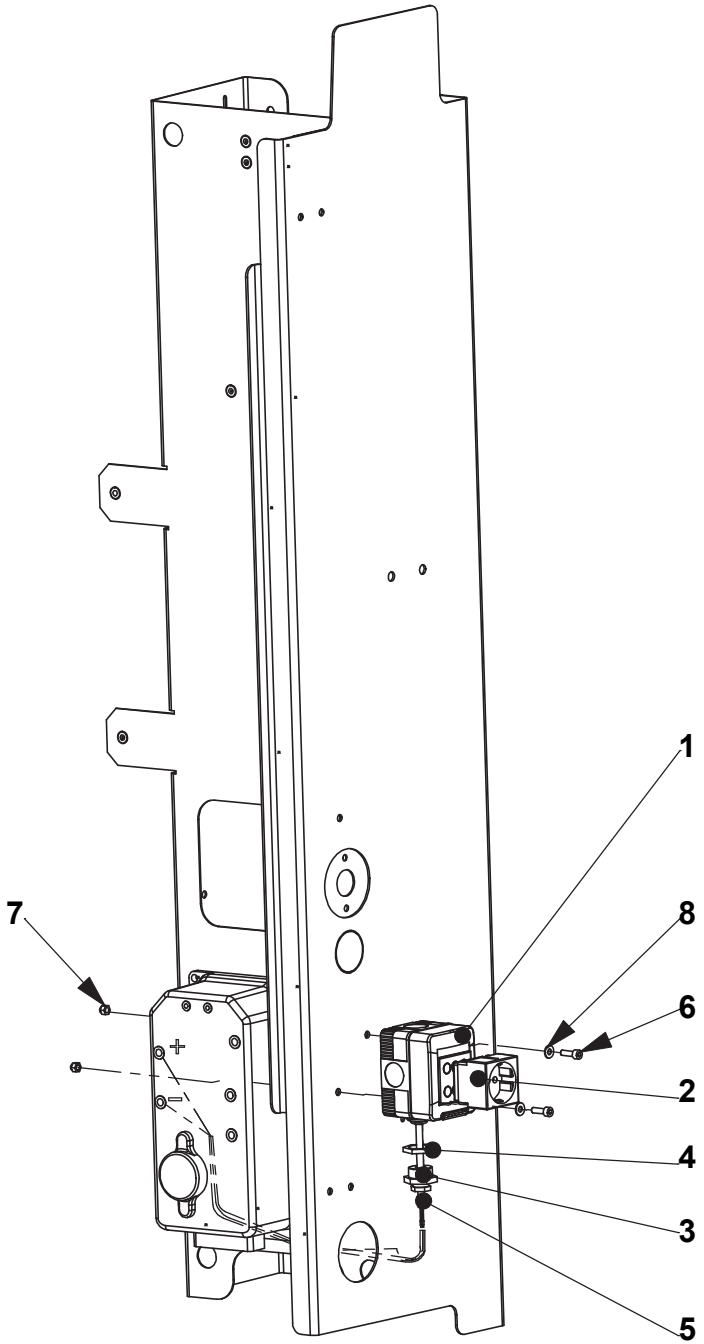


4000014680.B

## ▲ *ALIMENTATION 24V*
## *SUPPLY 24V*

◀ G-100-1 ▶

| Rep. | Désignation | Designation | Specification | Qty | Code | Up to / jusqu'à |
|---|---|---|---|---|---|---|
| *1* | *BOITIER PLASTIQUE* | *PLASTOC BOX* | | *1* | *2420203650* | |
| *2* | *PRISE* | *PLUG* | | *1* | *2441605060* | |
| *3* | *PRESSE ETOUPE* | *GLAND* | | *1* | *2441613020* | |
| *4* | *CONTRE ECROU* | *LOCK NUT* | | *1* | *2420302030* | |
| *5* | *FAISCEAU* | *LOOM* | | *1* | *4000015430* | |
| *6* | *VIS* | *SCREW* | | *2* | *2308231310* | |
| *7* | *ECROU* | *NUT* | | *2* | *2349222240* | |
| *8* | *RONDELLE* | *WASHER* | | *2* | *2351112040* | |

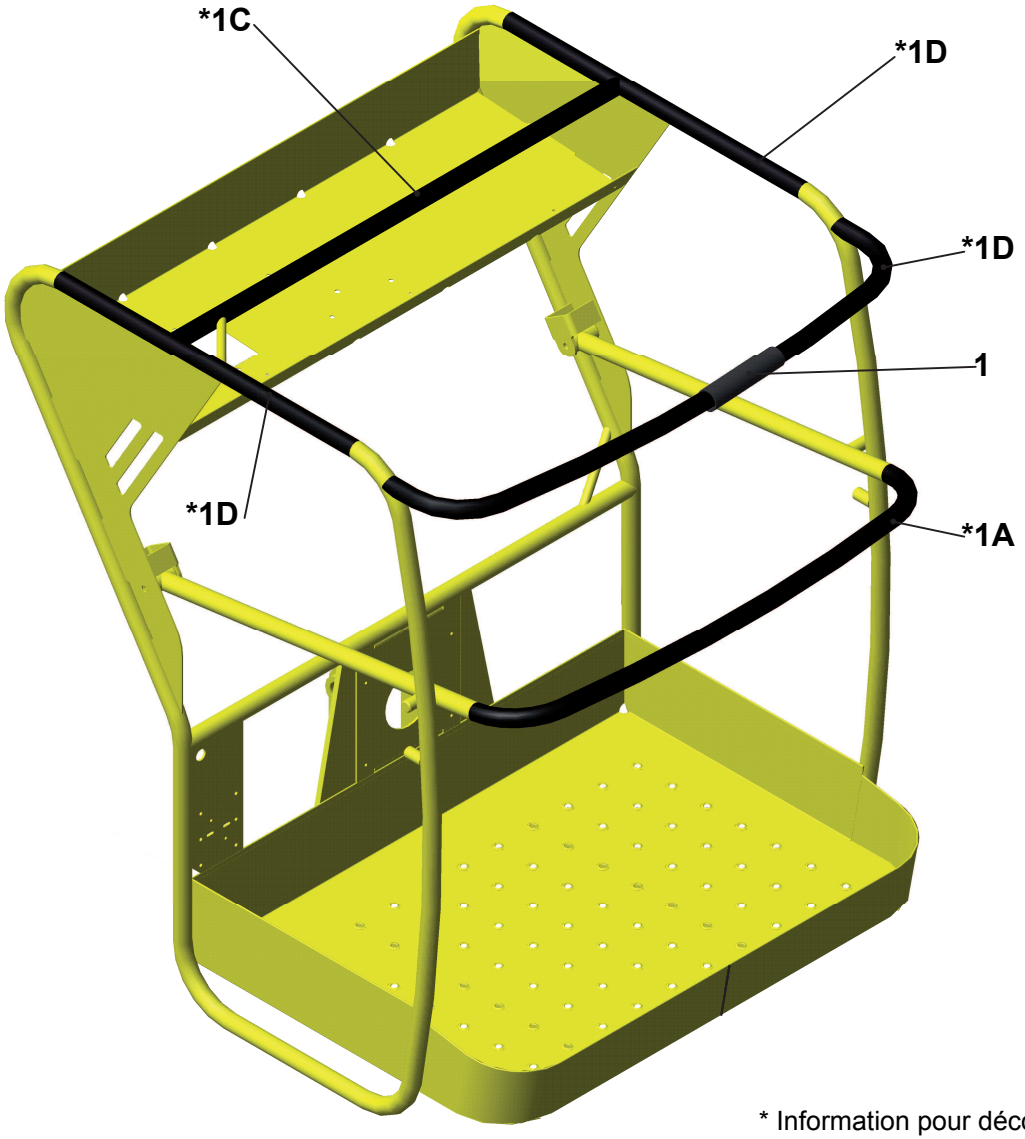


* Information pour découper à la longueur /
*information to cut length*

4000015570.A

# ▲ *GAINE SPIRALEE*
# *SPIRAL SHEATH*



| Rep. | Désignation | Designation | Specification | Qty | Code | Up to / jusqu'à |
|---|---|---|---|---|---|---|
| *1* | *GAINE SPIRALEE* | *SPIRAL SHEATH* | *4.5 mètres / meters* | | *2440701850* | |
| **1A* | *GAINE SPIRALEE* | *SPIRAL SHEATH* | *1.05 mètres / meters* | | - | |
| **1B* | *GAINE SPIRALEE* | *SPIRAL SHEATH* | *1.1 mètres / meters* | | - | |
| **1C* | *GAINE SPIRALEE* | *SPIRAL SHEATH* | *0.9 mètres / meters* | | - | |
| **1D* | *GAINE SPIRALEE* | *SPIRAL SHEATH* | *0.7 mètres / meters* | | - | |

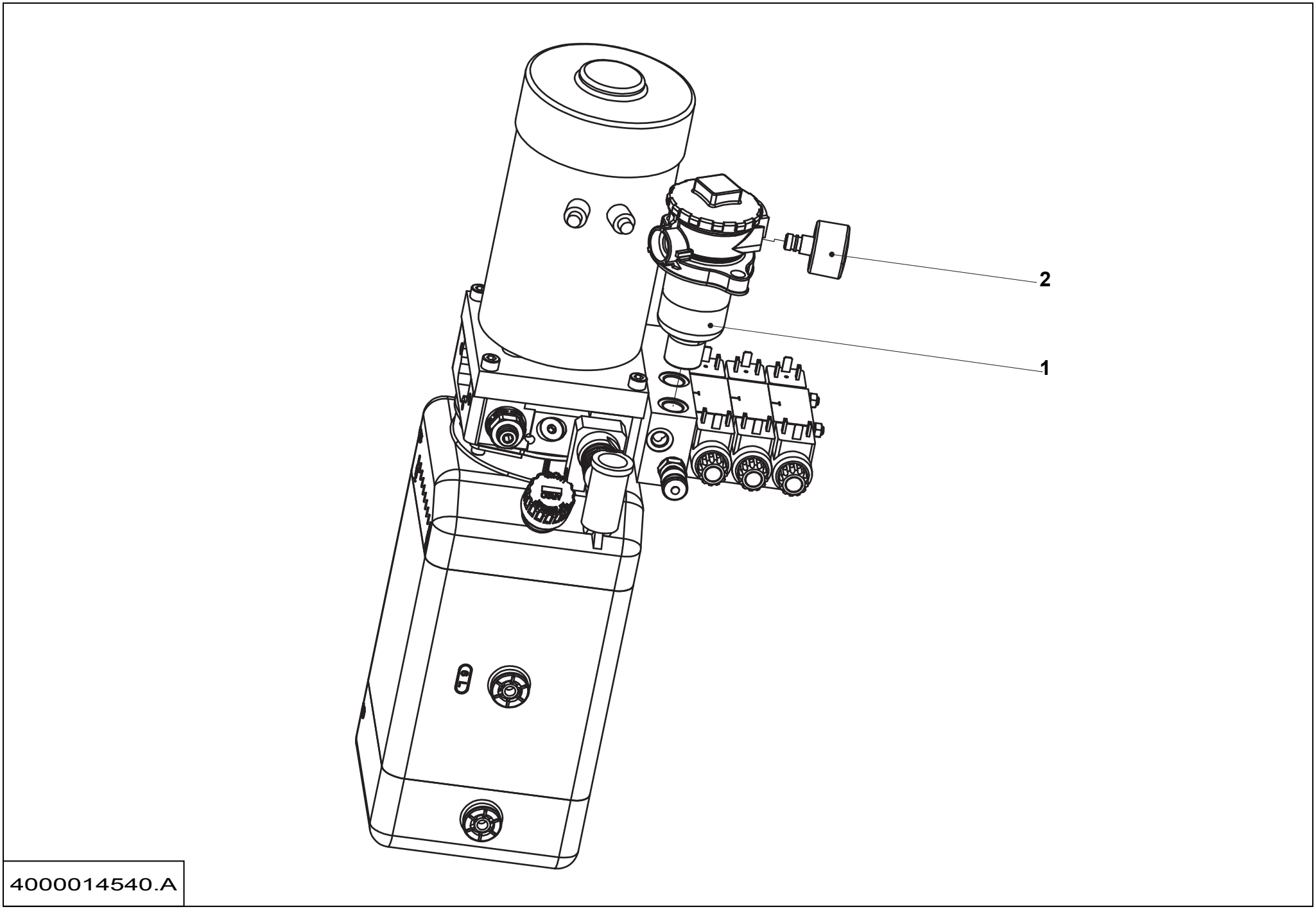
2
1
4000014540.A

## ▲ *FILTRE*
## *FILTER*



| Rep. | Désignation | Designation | Specification | Qty | Code | Up to / jusqu'à |
|---|---|---|---|---|---|---|
| *1* | *FILTRE* | *FILTER* | | *1* | *4000015410* | |
| *2* | *INDICATEUR DE COLMATAGE* | *CLOGGING INDICATOR* | | *1* | *4000015390* | |

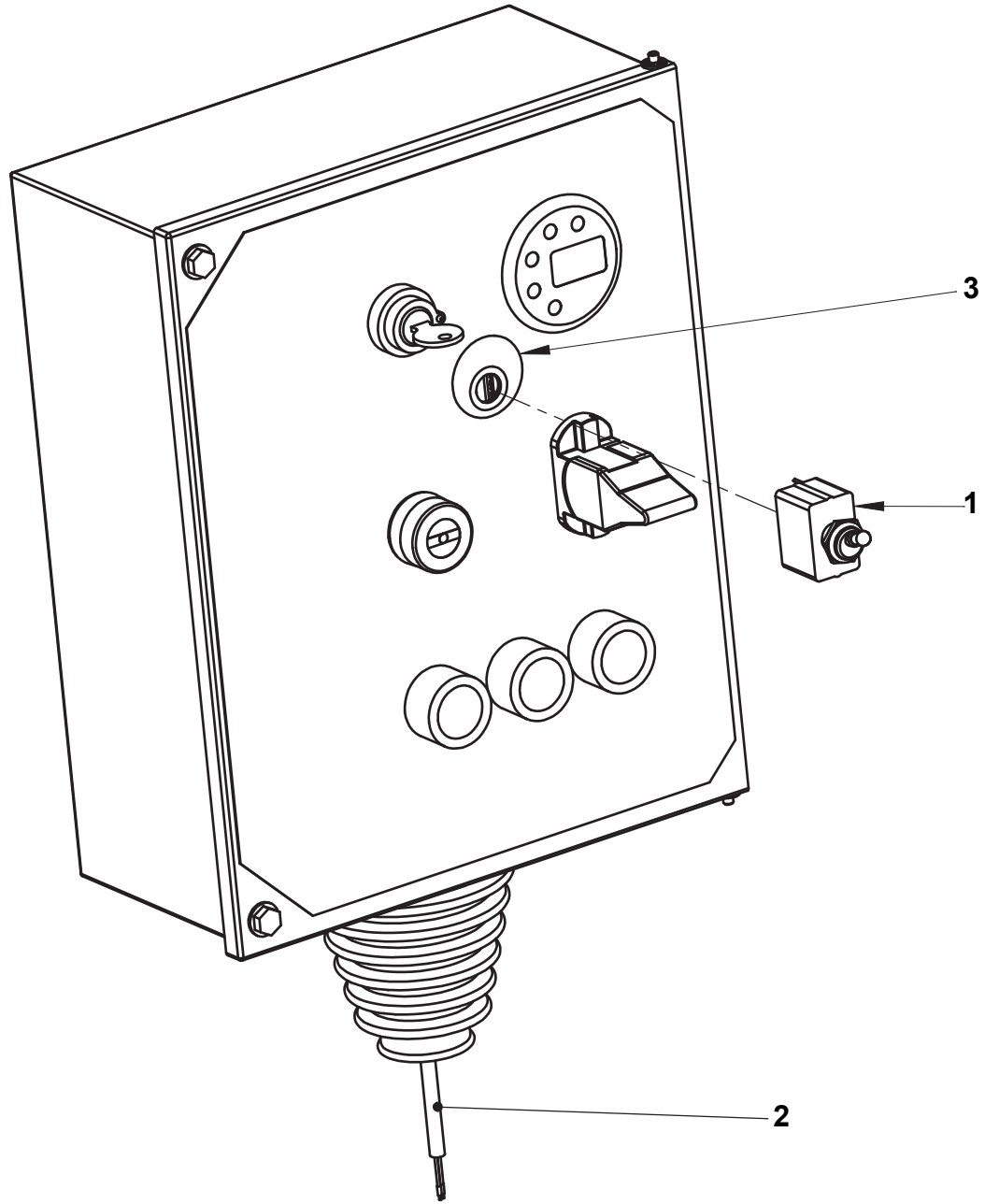


4000014790.A

## ▲ *COFFRET ELECTRIQUE*
## *ELECTRICAL CABINET*



| Rep. | Désignation | Designation | Specification | Qty | Code | Up to / jusqu'à |
|---|---|---|---|---|---|---|
| *1* | *INTERRUPTEUR* | *SWITCH* | | *1* | *2440901640* | |
| *2* | *FAISCEAU* | *LOOM* | | *1* | *4000013650* | |
| *3* | *ETIQUETTE* | *LABEL* | | *1* | *307P232520* | |

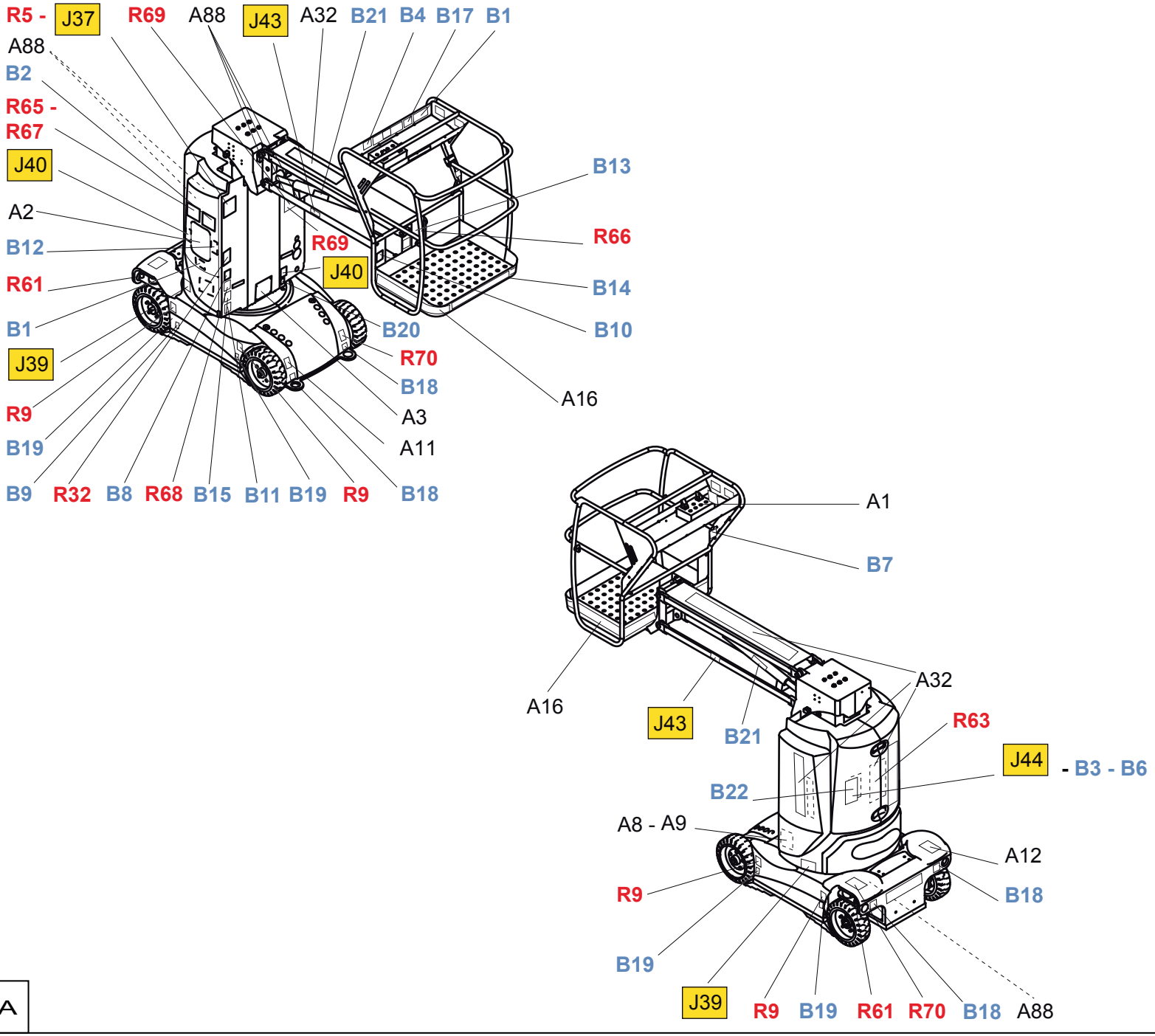
R5 - J37
R69
A88
J43
A32
B21
B4
B17
B1
A88
B2
R65 -
R67
J40
A2
B12
R61
B1
J39
R9
B19
B9
R32
B8
R68
B15
B11
B19
R9
B18
B13
R66
B14
B10
A16
R69
J40
B20
R70
B18
A3
A11
A1
B7
A16
J43
B21
A32
R63
J44
- B3 - B6
B22
A8 - A9
A12
R9
B18
B19
J39
R9
B19
R61
R70
B18
A88

155-6-09-01.A

# ▲ *ETIQUETTES*
# *LABELS*



| Rep. | Désignation | Designation | Specification | Qty | Code | Up to / jusqu'à |
|---|---|---|---|---|---|---|
| | PLAQUE CONSTRUCTEUR | MANUFACTURER PLATE | | 1 | 307P227820 | |
| | PLAQUE CONSTRUCTEUR | MANUFACTURER PLATE | | 1 | 4000016130 | |
| B1 | HAUTEUR CHARGE | LOAD HEIGHT | | 2 | 4000014410 | |
| B2 | INDICATION - EXPLICATION | INFORMATION-EXPLANATION | | 1 | 4000014360 | |
| B3 | RISQUE DE PROJECTION | PROJECTION RISK LABEL | | 1 | 307P226670 | |
| B3 | ETIQUETTE BLESSURE MAIN | HAND INJURY LABEL | | 1 | 307P226700 | |
| B4 | RISQUE DE PROJECTION | PROJECTION RISK LABEL | | 1 | 307P226680 | |
| B7 | POINT ANCRAGE | ANCHORAGE POINT | | 2 | 307P226710 | |
| B8 | RISQUE ELECTROCUTION | ELECTROCUTION RISK LABEL | | 1 | 307P226740 | |
| B9 | ETIQUETTE GRAISSAGE | LUBRICATION LABEL | | 1 | 307P227020 | |
| R5 | RISQUE ELECTROCUTION | ELECTROCUTION RISK LABEL | | 1 | 307P226960 | |
| B10 | INDICATION - EXPLICATION | INFORMATION-EXPLANATION | | 1 | 307P227050 | |
| B11 | INDICATION - EXPLICATION | INFORMATION-EXPLANATION | | 1 | 307P227060 | |
| B12 | INDICATION - EXPLICATION | INFORMATION-EXPLANATION | | 1 | 307P227180 | |
| B13 | MANUEL UTILISATION | OPERATING MANUAL | | 1 | 307P227190 | |
| B14 | INDICATION - EXPLICATION | INFORMATION-EXPLANATION | | 1 | 307P227510 | |
| B15 | INDICATION - EXPLICATION | INFORMATION-EXPLANATION | | 1 | 307P227520 | |
| B17 | GESTION DES MOUVEMENTS | MOVEMENTS MANAGEMENT | | 1 | 307P227040 | |
| B18 | ETIQUETTE INSTRUCTION | OPERATING INSTRUCTIONS | | 4 | 4000013970 | |
| B19 | ETIQUETTE INSTRUCTION | OPERATING INSTRUCTIONS | | 4 | 4000013830 | |
| B20 | ETIQUETTE INSTRUCTION | INSTRUCTION LABEL | | 1 | 4000013840 | |
| B21 | ETIQUETTE INSTRUCTION | INSTRUCTION LABEL | | 1 | 4000013910 | |
| B22 | GESTION DES MOUVEMENTS | MOVEMENTS MANAGEMENT | | 1 | 4000013930 | |
| J37 | DANGER ELECTROCUTION | ELECTROCUTION DANGER | | 1 | 307P227620 | |
| J39 | ETIQUETTE INSTRUCTION | INSTRUCTION LABEL | | 2 | 4000014340 | |
| J40 | ETIQUETTE INSTRUCTION | INSTRUCTION LABEL | | 2 | 4000014290 | |
| J43 | ETIQUETTE INSTRUCTION | INSTRUCTION LABEL | | 2 | 4000014270 | |
| J44 | ETIQUETTE INSTRUCTION | INSTRUCTION LABEL | | 2 | 4000014250 | |
| R61 | ETIQUETTE GRAISSAGE | LUBRICATION LABEL | | 2 | 307P219370 | |
| R63 | INTERDICTION | PROHIBITION | | 1 | 307P226760 | |
| R65 | INTERDICTION | PROHIBITION | | 2 | 307P226780 | |
| R65 | INTERDICTION | PROHIBITION | | 1 | 307P226950 | |
| R65 | INDICATION - EXPLICATION | INFORMATION - EXPLANATION | | 2 | 307P226970 | |
| R68 | INTERDICTION | PROHIBITION | | 2 | 307P226980 | |
| R69 | INTERDICTION | PROHIBITION | | 1 | 307P227000 | |
| R70 | INTERDICTION | PROHIBITION | | 2 | 307P227010 | |
| | | | | | | |

| English | Deutsch | Nederlands | Danska |
|---|---|---|---|
| « BATTERY CHARGE » LABEL | ETIKETT "BATTERIELADUNG" | ETIKET "ACCU LADEN" | ETIKET "BATTERIOPLADNING" |
| « BODY CRUSHING » LABEL | ETIKETT "QUETSCHUNGSGEFAHR KÖRPER" | ETIKET "VERPLETTINGSGEVAAR LICHAAM" | ETIKET "MASNING AF KROP" |
| « DIRECTION OF TRAVEL » LABEL | ETIKETT "FAHRTRICHTUNG" | ETIKET "TRANSLATIERICHTING" | ETIKET "KØRERETNING" |
| « DO NOT PARK » LABEL | ETIKETT "PARKVERBOT" | ETIKET "NIET PARKEREN" | ETIKET "PARKERING FORBUDT" |
| « ELECTROCUTION » LABEL | ETIKETT "BERÜHRUNGSGEFAHR" | ETIKET "ELEKTROCUTIE" | ETIKET "ELEKTRISK STØD" |
| « OPERATING INSTRUCTIONS » LABEL | ETIKETT "BEDIENUNGSHINWEISE" | ETIKET "GEBRUIKSINSTRUCTIES" | ETIKET "DRIFTSANVISNINGER" |
| « SLING LOAD » LABEL | ETIKETT "LAST ANSCHLAGSCHLINGE" | ETIKET "BELASTING STROP" | ETIKET "LAST, HEJSETOV" |
| « TRUCK FORK » LABEL | ETIKETT "WAGEN-GABEL" | ETIKET "WAGENVORK" | ETIKET "TRUCKGAFFEL" |
| ACCESS FLAP | ZUGANGSKLAPPE | TOEGANGSLUIK | LUGE |
| ADAPTOR | ADAPTER | ADAPTER | ADAPTER |
| ADHESIVE BASE | HAFTSOCKEL | KLEEFSOKKEL | SELVKLÆBENDE SOKKEL |
| ADHESIVE TAPE- NON-SLIP | RUTSCHFESTES HAFTMITTEL | ANTI-SLIP-STICKER | SKRIDSIKKER TAPE |
| ADJUSTABLE BEND | AUSRICHTBARER KRÜMMER | RICHTBARE KNIE | DREJBAR BØJNING |
| ADJUSTING WASHER | PAßSCHEIBE | AANPASSINGSRING | JUSTERINGSSKIVE |
| ALARM | ALARM | ALARM | ALARM |
| ANTI-SKIDDING MECHANISM | RUTSCHFEST | ANTISLIP | SKRIDSIKRING |
| AUSTRALIA LABELS | ETIKETTEN AUSTRALIEN | AUSTRALISCHE OPSCHRIFTEN | ETIKETTER (AUSTRALSKE) |
| BALL BEARING | KUGELLAGER | KOGELLAGER | KUGLELEJE |
| BASE | ANSATZ | BASIS | FODPLADE |
| BASKET ASSEMBLY | KORBEINHEIT | GEHEEL KORF | HEL KURV |
| BATTERY | BATTERIE | ACCU | BATTERI |
| BATTERY BOX | BATTERIEKASTEN | ACCUBAK | BATTERIHUS |
| BATTERY CHARGE EXTERNAL INDICATOR | AUßENANZEIGER BATTERIELADUNG | BUITENSTE INDICATOR ACCU LADEN | EKSTERN BATTERIOPLADNINGSINDIKATOR |
| BATTERY CHARGER | AKKU-LADEGERÄT | ACCULADER | BATTERILADER |
| BATTERY CHARGER | AKKU-LADEGERÄT | ACCULADER | BATTERILADER |
| BATTERY UNIT | BATTERIE | BATTERIJEN | BATTERI SAMLET |
| BATTERY WITH KIT | Batterie mit Kit | ACCU MET KIT | Batteri med tilbehør |
| BEARING | WÄLZLAGER | LAGER | KUGLELEJE |
| BEND | KRÜMMER | KNIE | BØJNING |
| BIODEGRADABLE OIL | ABBAUBARES ÖL | BIOLOGISCH AFBREEKBARE OLIE | BIOLOGISK NEDBRYDELIG OLIE |
| BLOCK | BLOCK | BLOK | BLOK |
| BLOCK | KÖRPER | LICHAAM | KAPPE |
| BOLT WITHOUT CLASP | RIEGEL OHNE SCHLIEßHAKEN | GRENDEL ZONDER SCHOOTPLAAT | LÅS UDEN LÅSEBLIK |

| English | Deutsch | Nederlands | Danska |
|---|---|---|---|
| BOX | KASTEN | KAST | KASSE |
| BOX | KASTEN | DOOS | HUS |
| BRIUSHES | KOHLE | KOOLBORSTEL | KUL |
| BRUSH SUPPORT | Träger Bürste | STEUN BORSTEL | Børsteholder |
| BUNDLES | BAUGRUPPE BÜNDEL | GEHEEL BUNDEL | ENHED, KABELBUNDTER |
| BUSH | RING | RING | RING |
| BUTTON BOX | | | |
| CABLE | KABEL | KABEL | KABEL |
| CAN | KANISTER | BUS | DUNK |
| CARTRIDGE | KARTUSCHE | PATROON | INDSATS |
| CE ITAL LABELS | ETIKETTEN ITALIEN | LABELS ITALIË | MÆRKATER ITALIEN |
| CENTRAL HYDRAULIC PLANT | HYDRAULIKZENTRALE | HYDRAULISCHE CENTRALE | HYDRAULISK CENTRAL |
| CENTRALISED FILLING | ZENTRALISIERTES FÜLLEN | CENTRAAL VULSYSTEEM | CENTRAL PÅFYLDNING |
| CHAIN | KETTE | KETTING | KÆDE |
| CHAIN SLACK OPTION | OPTION SCHLAFFKETTE | OPTIE KETTINGVERSLAPPING | OPTION, SLAP KÆDE |
| CHAIN SUPPORT | | | |
| CHAIN YOKE | KETTENABDECKUNG | KETTINGKAST | KÆDEBESKYTTER |
| CHARGER | LADEGERÄT | LADER | OPLADER |
| CHARGER CONNECTION | ANSCHLUSS LADEGERÄT | VERBINDING LADER | OPLADERTILSLUTNING |
| CHARGER OPTION | LADER-OPTION | OPTIE LADER | EKSTRAUDSTYR LASTEANORDNING |
| CHARGER UNIT | LADEGERÄT | GEHEEL LADER | OPLADER SAMLET |
| CHOCK | KEIL | WIG | KILE |
| CIRCLIPS | SICHERUNGSBÜGEL | KLEMMEN | LÅSERING |
| CLEVIS | ABDECKHAUBE | KAP | KAPPE |
| CLOGGING INDICATOR | VERSTOPFUNGSANZEIGER | AFDICHTINGSINDICATOR | TILSTOPNINGSINDIKATOR |
| COIL | DROSSEL | SPOEL | SPOLE |
| COLLAR | SCHELLE | BAND | KLEMME |
| COMMON LABELS | GEMEINSCHAFTSETIKETTEN | UNIVERSELE LABELS | FÆLLES MÆRKATER |
| COMPLETE PCB PLATE | UNTERLAGSPLATTE KOMPLETTE GEDRUCKTE SCHALTUNG | COMPLETE PC GEPERFOREERDE PLAAT | KOMPLET PRINTET KREDSLØBSPLADE |
| COMPRESSED AIR OPTION | OPTION DRUCKLUFT | OPTIE COMPRESSIELUCHT | EKSTRAUDSTYRET TRYKLUFT |
| COMPRESSION SPRING | DRUCKFEDER | COMPRESSIEVEER | KOMPRESSIONSFJEDER |
| CONICAL BEARING | KONISCHES WÄLZLAGER | KONISCH LAGER | KONISK KUGLELEJE |
| CONICAL SPRING WASHER | konischer Federring | CONISCH RINGETJE VEER | Konisk fjederskive |
| CONNECTOR | STECKVERBINDER | CONNECTOR | STIK |
| CONNECTOR | 9-WEGE STECKVERBINDER | CONNECTOR 9 WEGEN | KONNEKTOR, 9 BANER |

| English | Deutsch | Nederlands | Danska |
|---|---|---|---|
| CONTACT | KONTAKT | CONTACT | KONTAKTER |
| CONVERTER | KONVERTER | OMVORMER | KONVERTER |
| COUNTERWEIGHT ASSEMBLY | GEGENGEWICHTSEINHEIT | GEHEEL CONTRAGEWICHTEN | HEL MODVÆGT |
| COUPLING | KUPPLUNG | KOPPELING | KONTROLLER |
| COVERS | Verkleidung | CILINDERBEKLEDING | Skærm |
| COWLING ASSY | BAUGRUPPE VERKLEIDUNGEN | GEHEEL BEKLEDING | BEKLÆDNINGSENHED |
| CYL. ROLLER BEARING | ZYLINDERROLLENLAGER | LAGER CYL. ROL | CYLINDRISK RULLELEJE |
| CYLINDER LOWERING STANDBY CONTROL | NOTSTEUERUNG ZYLINDER SENKEN | NOODBEDIENING DALEN BALANCEERKLEP | NØDBETJENING TIL NEDSÆNKNING AF DONKRAFT |
| DENMARK LABELS | ETIKETTEN DÄNEMARK | LABELS DENEMARKEN | MÆRKATER DANMARK |
| DIFFERENTIAL CIRCUIT BREAKER OPTION | OPTION FEHLERSTROMSCHUTZSCHALTER | OPTIE DIFF. UITSCHAKELING | EKSTRAUDSTYRET DIFF. STRØMAFBRYDER |
| DO NOT GO DOWN LABEL | ETIKETT "NICHT AUSSTEIGEN" | OPSCHRIFT "NIET DALEN" | ETIKET "MÅ IKKE NEDSÆNKES" |
| DOCUMENT HOLDER | DOKUMENTENHALTER | DOCUMENTHOUDER | DOKUMENTHOLDER |
| DRILLED BLOCK | BOHRBLOCK | BOORBLOK | UDBORET BLOK |
| DRIVING AXLE-(TREE) | ANTRIEBSACHSE | AANDRIJFAS | DRIVAKSEL |
| DUAL ROD CYLINDER | DOPPELSTANGENZYLINDER | CILINDER MET DUBBELE PEN | CYLINDER MED TO RØR |
| ELECTRICAL CABINET | SCHALTKASTEN | ELEKTRISCHE KAST | KONTAKTSKAB |
| ELECTRO BRAKE | ELEKTROMAGNETISCHE BREMSE | ELEKTROMAGNETISCHE REM | ELEKTROMAGNETISK BREMSE |
| EMERGENCY LOWERING | SICHERHEITSABSENKUNG | NOODDALING | HJÆLPEAGGREGAT TIL SÆNKNING |
| EMERGENCY LOWERING | SICHERHEITSABSENKUNG | NOODDALING | HJÆLPEAGGREGAT TIL SÆNKNING |
| EMERGENCY LOWERING BLOCK | NOTSENKAGGREGAT | NOODDALINGSBLOK | SEKUNDÆR BLOKERING TIL NEDSÆNKNING |
| EMERGENCY STOP | NOTABSCHALTUNG | NOODSTOP | NØDSTOP |
| EQUAL T-PIECE | GLEICHSEITIGES T-STÜCK | GELIJKE T | T-STYKKER |
| FAN | LÜFTUNG | VENTILATOR | VENTILATOR |
| FASTENING FLANGE | BEFESTIGUNGSFLANSCH | BEVESTIGINGSFLENS | MONTAGEBESLAG TIL |
| FEMALE BOX | weibl. Gehäuse | KAST | Hunboks |
| FEMALE CONNECTOR | BUCHSENSTECKER | BUSCONNECTOR | HUNSTIK |
| FILTER | FILTER | FILTER | FILTER |
| FINLAND LABELS | ETIKETTEN FINNLAND | FINSE OPSCHRIFTEN | ETIKETTER (FINSKE) |
| FITTING | ANSCHLUß | VERBINDING | FORBINDELSESLED |
| FIXED COMB FOR CHAIN | FESTER KAMM FÜR KETTE | VASTE KAM VOOR KETTING | FAST KAM TIL KÆDE |
| FIXED MAST | UNVERSTELLBARER MAST | VASTE MAST | FAST MAST |
| FLANGE | FLANSCH | BEUGEL | BESLAG |
| FLANGED BLOCK | BLOCK FLANSCH | BLOK | FREMSTÅENDE BLOK |
| FLASHING LIGHT | BLINKFEUER | SCHIJNLICHT | BLINKLYS |

| English | Deutsch | Nederlands | Danska |
|---|---|---|---|
| FLASHING LIGHTS OPTION | OPTION RUNDUMKENNLEUCHTE | OPTIE SCHITTERLICHT | EKSTRAUDSTYRET BLINK |
| FLAT | FLACHEISEN | LAT | FLAD |
| FLAT WASHER | FLACHE UNTERLEGSCHEIBE | PLATTE RING | FLAD SKIVE |
| FLOOR HEIGHT + LOAD LABEL | "ETIKETT "FUßBODENHÖHE..." | ETIKET "HOOGTE VAN DE VLOER ..." | ETIKET "PLATFORMSHØJDE..." |
| FORBIDDEN LABEL | ETIKETT " VERBOTEN ZU..." | ETIKET "VERBODEN..." | ETIKET " FORBUD..." |
| FRENCH LABELS | ETIKETTEN FRANKREICH | LABELS FRANKRIJK | MÆRKATER FRANKRIG |
| FUSE | SICHERUNG | ZEKERING | SIKRING |
| FUSE HOLDER | SICHERUNGSHALTER | ZEKERINGHOUDER | SIKRINGSHOLDER |
| GAITER | GEBLÄSE | BALG | BLÆSER |
| GANTRY ASSY. | BÜHNE | TOTALE GONDEL | KURVEUDSTYR |
| GEL BATTERY OPTION | OPTION GELBATTERIE | OPTIE ACCU GEL | EKSTRAUDSTYR FROSTSIKRING BATTERI |
| GERMANY LABELS | ETIKETTEN DEUTSCHLAND | DUITSE OPSCHRIFTEN | ETIKETTER (TYSKE) |
| GREEN ARROW | GRÜNER PFEIL | GROENE PIJL | GRØN PIL |
| GREEN INDICATOR LIGHT | GRÜNE LED | GROENE VERKLIKKERLICHT | GRØN KONTROLLAMPE |
| GROMMET | DRAHTDURCHFÜHRUNG | DRAADGELEIDER | SADELMAGERNÅL |
| GUARDRAIL | GELÄNDER | RELING | RÆKVÆRK |
| GUIDE | FÜHRUNG | GELEIDER | STANG |
| GUIDE PAD | FÜHRUNGSKUFE | GELEIDINGSGLIJSCHOEN | GLIDESKO |
| GUIDE RING | FÜHRUNGSRING | GELEIDERING | STYRERING |
| GUIDING AXLE-(TREE) | LENKACHSE | AS MET STUURBARE WIELEN | STYREAKSEL |
| HAND PUMP | HANDPUMPE | HANDPOMP | HÅNDPUMPE |
| HANDLING OPTION | OPTION FÖRDERTECHNIK | OPTIE TRANSPORT | OPTION, HÅNDTERING |
| HARNESS KIT | SATZ KABELBÜNDEL | KIT BUNDELS | KIT, KABELNET |
| HAULOTTE GROUP LOGO | Grafik Haulotte Group | HAULOTTE GROUP | Grafik Haulotte Group |
| HEAT INSULATION | WÄRMEISOLIERER | WARMTEISOLATIE | VARMEISOLATOR |
| HOISTING EYE | HUBÖSE | HIJSRING | LØFTEØJE |
| HOLDER | HALTERUNG | STEUN | KONSOL |
| HOLLAND LABELS | ETIKETTEN HOLLAND | NEDERLANDSE OPSCHRIFTEN | ETIKETTER (HOLLANDSKE) |
| HORN (WARNING SIGNAL) | HUP-/WARNSIGNAL | WAARSCHUWING CLAXON | SIGNALHORN |
| HUB | NABE | NAAF | NAV |
| HUB PLUG | NABENDECKEL | NAAFDOP | NAVDÆKSEL |
| HYDRAULIC SECTION | BAUGRUPPE HYDRAULIK | GEHEEL HYDRAULICA | HYDRAULIKENHED |
| HYDRAULIC TUBE | HYDRAULIKROHR | HYDRAULISCHE BUIS | HYDRAULIKRØR |
| INSERT | EINSATZ | INZETSTUK | INDSATS |
| interface | | | |

| English | Deutsch | Nederlands | Danska |
|---|---|---|---|
| INTERMEDIATE GUARDRAIL | ZWISCHENGELÄNDER | MIDDELSTE BESCHERMSTANG | MELLEMRÆKVÆRK |
| JIB ASSEMBLY | PENDELARMEINHEIT | GEHEEL SLINGER | HEL FJERNUDLIGGER |
| JUNCTION | VERBINDUNG | VERBINDING | SAMLING |
| JUNCTION BLOCK | VERBINDUNGSBLOCK | KOPPELBLOK | KLEMRÆKKE |
| KEY | KEIL | WIGBOUT | KILE |
| KEY SELECTOR | WAHLSCHALTER MIT SCHLÜSSEL | SLEUTELSCHAKELAAR | NØGLEVÆLGER |
| KNURLED KNOB | GERIEFTER SCHALTER | GEKARTELDE KNOP | RIFLET KNAP |
| LABEL- WARRANTY ACTIVATION | GARANTIEAKTIVIERUNG | ACTIVEREN GARANTIE | IVÆRKSÆTTELSE AF GARANTI |
| LABELS | ETIKETTEN | ETIKETTEN | ETIKETTER |
| LATCH | RIEGEL | PAL | LÅS |
| LEFT HOOD | LINKE SCHUTZABDECKUNG | LINKER KAP | VENSTRE SKÆRM |
| LENS | LINSE | LENS | LINSE |
| LEVER | HEBEL | HENDEL | LØFTESTANG |
| LIFTING CYLINDER | HUBZYLINDER | HEFCILINDER | LØFTECYLINDER |
| LIGHT | LED | LAMP | KONTROLLAMPE |
| LINK ROD | SCHWINGARM | DRIJFSTANG | LILLE FORBINDELSESSTANG |
| LOAD ON ONE WHEEL | LAST AUF EINEM RAD | BELASTING OP 1 WIEL | BELASTNING PÅ ET HJUL |
| LOCK | SPINDEL | PEN | TAP |
| LOGO | GRAPHIK | OPSCHRIFT | SKRIFT |
| LOOM | KABELSTRANG | BUNDEL | BUNDT |
| LOWER BOX CABLING | VERKABELUNG SCHALTKASTEN AUFBAU | BEKABELING TORENKAST | KABELFØRING TIL TÅRNBOKS |
| LOWER PANEL | UNTERER STEUERSTAND | BEDIENINGSKAST LAAG | NEDERSTE STYREPANEL |
| LUG | KABELSCHUH | POOLKLEM | POLSKO |
| MAINTENANCE LOG | WARTUNGSHEFT | LOGBOEK ONDERHOUD | SERVICEBOG |
| MALE CONNECTOR | | | |
| MALE EVEN BEND | KRÜMMER MIT AUßENGEWINDE | INTREDENDE KNIE | BØJNING MED GEVIND |
| MALE UNION | ANSCHLUßSTÜCK MIT AUßENGEWINDE | INTREDENDE VERBINDING | SAMLING HAN |
| MANIFOLD | SAMMLER | COLLECTOR | INDSAMLER |
| MANUFACTURER PLATE | HERSTELLERSCHILD | CONSTRUCTIEPLAATJE | TYPESKILT |
| MAST FOOT | MASTFUß | MASTVOET | MASTEFOD |
| METAL FRAME PROFILE | METALLSTRUKTURPROFIL | METAAL RAAMPROFIEL | PROFIL AF METALARMATUR |
| MODULE | MODUL | MODULE | MODUL |
| MOULDED COUNTERWEIGHT | GEGOSSENES GEGENGEWICHT | GEGOTEN CONTRAGEWICHT | STØBT BALANCEKLODS |
| NUT | MUTTER | MOER | MØTRIK |
| O-RING | O-RINGDICHTUNG | AFDICHTRING | O-RING |

| English | Deutsch | Nederlands | Danska |
|---|---|---|---|
| OIL LEVEL | ÖLSTAND | OLIEPEIL | OLIESTAND |
| ON/OFF | AN / AUS | ON/OFF | ON/OFF |
| ON/OFF MOVEMENTS BLOCK | BEWEGUNGSBLOCK ALLES-ODER-NICHTS-PRINZIP | BEWEGINGSBLOK ALLES-OF-NIETS | BEVÆGELSESBLOK ALT ELLER INTET |
| ONE-WAY VALVE | RÜCKSCHLAGKLAPPE | TERUGSLAGKLEP | KONTRAVENTIL |
| OPERATING MANUAL | Bedienungshandbuch | GEBRUIKSHANDLEIDING | Brugermanual |
| OPERATOR MANUAL | BEDIENUNGS- UND WARTUNGSHANDBUCH | BESTURINGS- EN ONDERHOUDSINSTRUKTIES | EU-BETJENINGSVEJLEDNING |
| OPERATOR MANUAL | BEDIENERHANDBUCH | OPERATOR'S MANUAL | BRUGER MANUAL |
| OPTION | OPTION | OPTIE | EKSTRAUDSTYR |
| OPTION | OPTION | OPTIE | EKSTRAUDSTYR |
| OSCILLATING CASE | DREHKASTEN | OSCILLEREND TUSSENBLOK | SVINGENDE KASSE |
| OWNER'S MANUAL | BESITZERHANDBUCH | OWNER'S MANUAL | BRUGERVEJLEDNING |
| PENDULAR ARM | PENDELARM | SLINGER-ARM | PENDULARM |
| PIN | ZEIGERBEFESTIGUNG | ENBUS | BØSNING |
| PIN | STIFT | PEN | METALSTIFT |
| PIN- PULLEY | ROLLENACHSE | AS VAN RIEMSCHIJF | REMSKIVEAKSEL |
| PIN- TIE ROD | VERBINDUNGSSTANGENACHSE | AS SPOORSTANG | LØFTESTANGSAKSEL |
| PLASTIC PROTECTION DEVICE | KUNSTSTOFFABDECKUNG | KUNSTSTOF BESCHERMING | PLASTBESKYTTELSE |
| PLASTIC SPIRAL HOSE | ELASTISCHE KUNSTSTOFFSPIRALE | KUNSTSTOF SPIRAALSLANG | FLEKSIBEL PLASTSPIRAL |
| PLATE | UNTERLAGSPLATTE | GEPERFOREERDE PLAAT | PLADE |
| PLATFORM + JIB | BÜHNE + PENDELARM | KORF + SLINGER | KURV + PENDELAKSEL |
| PLUG | STOPFEN | PLUG | STUDS |
| PLUG | STECKER | FICHE | STIK |
| PLUG CONTACT | männl. Kontakt | MANNELIJKE VERBINDING | Hankontakt |
| PLUG SOCKET | ETIKETT "240V-ANSCHLUß" | ETIKET "STEKKER 240V" | ETIKET "240 V-STIK" |
| PLUG SOCKET | ANSCHLUß | AANSLUITING | STIK |
| PORTUGAL LABELS | ETIKETTEN PORTUGAL | PORTUGESE OPSCHRIFTEN | ETIKETTER (PORTUGISISKE) |
| POSITION SWITCH | POSITIONSSCHALTER | POSITIESCHAKELAAR | STILLINGSKOBLER |
| POTENTIOMETER | POTENTIOMETER | POTENTIOMETER | POTENTIOMETER |
| POWER SUPPLY LIFTING DEVICE OPTION | OPTION KORBANSCHLUSS | OPTIE VOED. IN KORF | EKSTRAUDSTYRET STRØMFORSYNING I KURV |
| POWER SUPPLY SECTION | BAUGRUPPE ELEKTRIK | GEHEEL ELEKTRICITEIT | STRØMFORSYNINGSENHED |
| PRESSURE FILTER | DRUCKFILTER | DRUKFILTER | TRYKFILTER |
| PRESSURISED LIQUID LABEL | ETIKETT "MEDIEN UNTER DRUCK" | OPSCHRIFT VLOEISTOF ONDER DRUK | ETIKET "VÆSKE UNDER TRYK" |
| PRINTED CIRCUIT | BEDRUCKTE LEITERPLATTE | GEDRUKTE SCHAKELING | TRYKT KREDSLØB |
| PROTECTION | ABDECKUNG | BEVEILIGING | BESKYTTELSE |

| English | Deutsch | Nederlands | Danska |
|---|---|---|---|
| PROTECTIVE CAP | SCHUTZSTOPFEN | SCHERMDOP | BESKYTTELSESPROP |
| PROTECTIVE HOOD | SCHUTZHAUBE | BESCHERMKAP | BESKYTTELSESSKÆRM |
| PROTECTIVE PLATE | SCHUTZBLECH | STAALPLAATBESCHERMING | BESKYTTELSESPLADE |
| PULLEY | ROLLE | KATROL | REMSKIVE |
| PUMP | PUMPE | POMP | PUMPE |
| PUSH BUTTON | DRUCKSCHALTER | DRUKKNOP | TRYKKNAP |
| RAIL | HANDLAUF | HANDLIJST | LØNNING |
| RAPID FASTENER | SCHNELLANSCHLUSS | SNELKOPPELING | HURTIG TILSLUTNING |
| RECEPTACLE | AUFNAHME | HOUDER | OPSAMLINGSBAKKE |
| RED ARROW | ROTER PFEIL | RODE PIJL | RØD PIL |
| RED LIGHT INDICATOR | ROTE KONTROLLEUCHTE | ROOD VERKLIKKERLAMPJE | RØD INDIKATORLAMPE |
| RELAY | RELAIS | RELAIS | RELÆ |
| RELIEF VALVE | | | |
| RETAINER WASHER | HALTESCHEIBE | BORGRING | FASTHOLDELSESSKIVE |
| RIDGED CONICAL WASHER | PROFILIERTE TELLERFEDER | GERILDE CONISCHE SLUITRING | RIFLET KONISK SKIVE |
| RIGHT HOOD | RECHTE SCHUTZABDECKUNG | RECHTER KAP | HØJRE SKÆRM |
| RIM | FELGE | VELG | FÆLG |
| RING- RUBBER | GUMMIRING | ELASTISCHE RING | ELASTIK RING |
| ROTOR | ROTOR | ROTOR | ROTOR |
| RUBBER SEAL | GUMMIDICHTUNG | RUBBEREN PAKKING | GUMMIPAKNING |
| SAFETY SEAL PLUG | KAPSELVERSCHLUSS | VERZEGELDE STOP | BESKYTTELSESLÅG |
| SCRAPER SEAL | SCHABERDICHTUNG | SCHRAPERPAKKING | PAKNING, SKRABER |
| SCREW | SCHRAUBE | SCHROEF | SKRUE |
| SEAL | DICHTUNG | PAKKING | SAMLING |
| SEAL KIT | SATZ DICHTUNGEN | PAKKINGSET | PAKNINGSSÆT |
| SEALING RING | DICHTUNG | PAKKING | TÆTNING |
| SELF-LOCKED NUT | SELBSTGESICHERTE MUTTER | ZELFREMMENDE MOER | MØTRIK MED AUTOMATISK STOP |
| SENSOR SUPPORT | SENSORTRÄGER | STEUN SENSOR | FØLERHOLDER |
| SERIAL BOARD | SERIAL-KARTE | SERIËLE KAART | SERIELT KORT |
| SHAFT SEAL | WELLENDICHTUNG | ASPAKKING | AKSELPAKNING |
| SHAFT- OUTPUT | AUSGANGSWELLE | UITGAANDE AS | UDGANGSAKSEL |
| SHEET METAL SUPPORT | STÜTZPLATTE AUS METALL | STAALPLAAT STEUN | STØTTEPLADE |
| SHUNT | SHUNT | SHUNT | SHUNT |
| SINGLE-AXIS JOYSTICK | STEUERHEBEL 1 ACHSE | SEINGEVER 1 ASSEN | MANIPULATOR 1 AKSEL |
| SLEEVE | MUFFE | MOF | BØSNING |

| English | Deutsch | Nederlands | Danska |
|---|---|---|---|
| SLEW BEARING | DREHKRANZSET | GEHEEL DRAAIKRANS | DREJERINGSSÆT |
| SLEW RING | DREHKRANZ | ORIËNTATIEKROON | RETNINGSREGULERINGSKRAVE |
| SLOPE SENSOR | NEIGUNGSERFASSUNG | DETECTOR VAN OVERHELLING | HÆLDNINGSDETEKTOR |
| SLOTTED SCREW | SCHLITZSCHRAUBE | GESPLETEN SCHROEF | SKRUE MED KÆRV |
| SOCKET CONTACT | weibl. Kontakt | VROUWELIJKE VERBINDING | Hunkontakt |
| SOLENOID VALVE | ELEKTROVENTIL | ELEKTROVENTIEL | ELEKTROVENTIL |
| SPACER | ZWISCHENSTÜCK | TUSSENSTUK | MELLEMSTYKKE |
| SPAIN LABELS | ETIKETTEN SPANIEN | SPAANSE OPSCHRIFTEN | ETIKETTER (SPANSKE) |
| SPARE PARTS MANUAL | ERSATZTEILKATALOG | CATALOGUS VERVANGONDERDELEN | RESERVEDELSKATALOG |
| SPLIT PIN | GESCHLITZER STIFT | SPLITPEN | SPLIT |
| SPRING | FEDER | VEER | FJEDER |
| STEERING CYLINDER | FÜHRUNGSZYLINDER | STUURCILINDER | KØRSELSCYLINDER |
| STUD | STIFTBOLZEN | STIFT | STIFT |
| SUB-FRAME | GESTELL | CHASSIS | CHASSIS |
| SUPPLY | STROMVERSORGUNG | VOEDING | STRØMFORSYNING |
| SUPPORT LUG | TRÄGERFUSS | HAAK STEUN | STØTTEUNDERSTEL |
| SWITCH BOX | SCHALTER | SCHAKELAAR | KONTAKT |
| Temperature sensor | TEMPERATURSENSOR | TEMPERATUURSENSOR | TEMPERATURFØLER |
| TERMINAL BLOCK | ANSCHLUSSLEISTE | AANSLUITBLOK | KLEMRÆKKE |
| TERMINAL PARTITION BLOCK | BLOCK ENDWAND | BLOK EINDWAND | SLUTVÆGSBLOK |
| THRUST WASHER | DRUCKSCHEIBE | AANSLAGRING DE | BRYSTRING |
| THUMB WHEEL | RÄNDELRAD | GERIBDE KNOP | RULLE |
| TIE ROD | ZUGSTANGE | STANG | TRÆKSTANG |
| TIGHTENING COLLAR | KLEMMSCHELLE | KLEMRING | SPÆNDERING |
| TIRE | REIFEN | BAND | DÆK |
| TRACTION BATTERY ASSEMBLY | EINHEIT BATTERIE ZUG | GEHEEL TRACTIEBATTERIJ | HELT TRAKTIONSBATTERI |
| TRACTION BATTERY OPTION | Option Batterieantrieb | OPTIE TRACTIEACCU | Traktionsbatteri |
| TURN KNOB HEAD | DREHSCHALTERKOPF | KOP VOOR DRAAIKNOP | DREJEKNAPHOVED |
| TURNTABLE CONTROL BOX | ETIKETTE SCHALTPULT AUFBAU | ETIKET BEDIENINGSPANEEL TORENKAST | ETIKET TÅRNPULT |
| TURNTABLE ELECTRICITY | STROM AUFBAU | ELEKTRICITEIT TOREN | ELEKTRICITET TÅRN |
| TURRET UNIT | GRUPPE AUFBAU | GROEP TOREN | SØJLEGRUPPE |
| UPPER CONTROL BOX | OBERER STEUERSTAND | BEDIENINGSKAST HOOG | ØVERSTE STYREPANEL |
| UPPER CONTROL BOX | SCHALTPULT ARBEITSBÜHNE | BEDIENINGSKAST HOOGWERKER | BETJENINGSPULT I KURV |
| USA OPTION | OPTION USA | OPTIONEEL USA | OPTION USA |
| USER MANUAL | BENUTZER-HANDBUCH | GEBRUIKSHANDLEIDING | BRUGERHÅNDBOG |

| English | Deutsch | Nederlands | Danska |
|---|---|---|---|
| WASHER | UNTERLEGSCHEIBE | RING | SKIVE |
| WATER PROOF BATTERY CHARGER | ABGEDICHTETES BATTERIELADEGERÄT | VERZELGELDE-ACCU-LADER | VANDTÆT BATTERIOPLADER |
| WATER PROOF BATTERY CHARGER | ABGEDICHTETES BATTERIELADEGERÄT | VERZELGELDE-ACCU-LADER | VANDTÆT BATTERIOPLADER |
| WEARING (OF) SAFETY HARNESS | TRAGEN EINES GESCHIRRS | DRAAG TUIG | BRUG SIKKERHEDSSELE |
| WHEEL HUB | RADNABE | WIELNAAF | HJULNAV |
| WINDER | AUFWICKELVORRICHTUNG | OPROLLER | STRAMMERULLE |
| WIRE | DRAHT | DRAAD | LEDNING |

| English | Español | Italiano | Português |
|---|---|---|---|
| « BATTERY CHARGE » LABEL | ETIQUETA "CARGA BATERÍA" | ETICHETTA "CARICA BATTERIA" | ETIQUETA "CARGA BATERIA" |
| « BODY CRUSHING » LABEL | ETIQUETA "APLASTAMIENTO CUERPO" | ETICHETTA "SCHIACCIAMENTO CORPO" | ETIQUETA "ESMAGAMENTO CORPO" |
| « DIRECTION OF TRAVEL » LABEL | ETIQUETA "SENTIDO TRANSLACIÓN" | ETICHETTA "SENSO TRASLAZIONE" | ETIQUETA "SENTIDO TRANSLAÇÃO" |
| « DO NOT PARK » LABEL | ETIQUETA "NO APARCAR" | ETICHETTA "NON SOSTARE" | ETIQUETA "NÃO ESTACIONAR" |
| « ELECTROCUTION » LABEL | ETIQUETA "ELECTROCUCIÓN" | ETICHETTA "ELETTROCUZIONE" | ETIQUETA "ELECTROCUSSÃO" |
| « OPERATING INSTRUCTIONS » LABEL | ETIQUETA "CONSIGNAS UTILIZACIÓN" | ETICHETTA "ISTRUZIONI PER LUTILIZZO" | ETIQUETA "INSTRUÇÕES DE UTILIZAÇÃO" |
| « SLING LOAD » LABEL | ETIQUETA "CARGA ESLINGA" | ETICHETTA "CARICA BRACA" | ETIQUETA "CARGA ESTROPO" |
| « TRUCK FORK » LABEL | ETIQUETA "HORQUILLA CARRO" | ETICHETTA "FORCA CARRELLO" | ETIQUETA "GARFO CARRINHO" |
| ACCESS FLAP | TRAMPILLA DE ACCESO | PORTELLO D'ACCESSO | ALÇAPÃO DE ACESSO |
| ADAPTOR | ADAPTADOR | ADATTATORE | ADAPTADOR |
| ADHESIVE BASE | ZÓCALO ADHESIVO | ZOCCOLO ADESIVO | BASE ADESIVA |
| ADHESIVE TAPE- NON-SLIP | ADHESIVO ANTIDESLIZANTE | ADESIVO ANTISCIVOLO | ADESIVO ANTI-DERRAPANTE |
| ADJUSTABLE BEND | CODO ORIENTABLE | GOMITO ORIENTABILE | JOELHO ORIENTÁVEL |
| ADJUSTING WASHER | ARANDELA DE AJUSTE | RONDELLA DI REGOLAZIONE | ANILHA DE AJUSTE |
| ALARM | ALARMA | ALLARME | ALARME |
| ANTI-SKIDDING MECHANISM | ANTIDERRAPANTE | ANTISLITTAMENTO | ANTI DERRAPAGEM |
| AUSTRALIA LABELS | ETIQUETAS AUSTRALIA | ETICHETTE AUSTRALIA | ETIQUETAS AUSTRÁLIA |
| BALL BEARING | RODAMIENTO DE BOLAS | CUSCINETTO A SFERA | ROLAMENTO DE ESFERAS |
| BASE | ASIENTO | COLLARE | COLAR |
| BASKET ASSEMBLY | CONJUNTO CESTA | INSIEME CESTELLO | CONJUNTO CESTO |
| BATTERY | BATERÍA | BATTERIA | BATERIA |
| BATTERY BOX | CAJA BATERÍAS | CASSA BATTERIE | CAIXA DE BATERIA |
| BATTERY CHARGE EXTERNAL INDICATOR | INDICADOR EXTERIOR CARGA BATERÍA | INDICATORE ESTERNO CARICA BATTERIA | INDICADOR EXTERIOR CARGA BATERIA |
| BATTERY CHARGER | CARGADOR DE BATERÍA | CARICATORE DE BATTERIA | CARREGADOR DE BATERIA |
| BATTERY CHARGER | CARGADOR DE BATERÍA | CARICATORE DE BATTERIA | CARREGADOR DE BATERIA |
| BATTERY UNIT | CONJUNTO BATERÍA | INSIEME BATTERIA | CONJUNTO BATERIA |
| BATTERY WITH KIT | BATERÍA CON KIT | BATTERIA CON KIT | BATERIA COM CONJUNTO |
| BEARING | RODAMIENTO | CUSCINETTO | ROLAMENTO |
| BEND | CODO | GOMITO | JOELHO |
| BIODEGRADABLE OIL | ACEITE BIODEGRADABLE | OLIO BIODEGRADABILE | ÓLEO BIODEGRADÁVEL |
| BLOCK | BLOQUE | BLOCCO | BLOCO |
| BLOCK | CUERPO | CORPO | CORPO |
| BOLT WITHOUT CLASP | CERROJO SIN CERRADURA | CHIAVISTELLO SENZA BOCCHETTA | FERROLHO SEM BATENTE |
| BOX | CAJÓN | CASSONE | CAIXA |
| BOX | CAJA | SCATOLA | CAIXA |

| English | Español | Italiano | Português |
|---|---|---|---|
| BRIUSHES | CARBÓN | CARBONE | CARVÃO |
| BRUSH SUPPORT | SOPORTE CEPILLO | SUPPORTO SPAZZOLA | SUPORTE DA ESCOVA |
| BUNDLES | CONJUNTO HACES | INSIEME FASCI | CONJUNTO FEIXES |
| BUSH | ANILLO | ANELLO | CASQUILHO |
| BUTTON BOX | | | |
| CABLE | CABLE | CAVO | CABO |
| CAN | BIDÓN | BIDONE | BIDÃO |
| CARTRIDGE | CARTUCO | CARTUCCIA | CARTUCHO |
| CE ITAL LABELS | ETIQUETAS ITALIA | ETICHETTE ITALIA | ETIQUETAS ITÁLIA |
| CENTRAL HYDRAULIC PLANT | CENTRAL HIDRÁULICA | CENTRALE IDRAULICA | CENTRAL HIDRÁULICA |
| CENTRALISED FILLING | RELLENADO CENTRALIZADO | RIEMPIMENTO CENTRALIZZATO | ENCHIMENTO CENTRALIZADO |
| CHAIN | CADENA | CATENA | CORRENTE |
| CHAIN SLACK OPTION | OPCIÓN DE TENSOR DE CADENAS | OPZIONE ALLENTAMENTO CATENA | Opção Afrouxamento de correntes |
| CHAIN SUPPORT | | | |
| CHAIN YOKE | CAJA DE CADENA | PROTEZIONE CATENA | CHAPA DE CORREIA |
| CHARGER | CARGADOR | CARICA BATTERIE | CARREGADOR |
| CHARGER CONNECTION | CONEXIÓN CARGADOR | RACCORDO CARICATORE | JUNÇÃO CARREGADOR |
| CHARGER OPTION | OPCIÓN CARGADOR | OPZIONE CARICATORE | OPÇÃO CARREGADOR |
| CHARGER UNIT | CONJUNTO CARGADOR | INSIEME CARICA BATTERIE | CONJUNTO CARREGADOR |
| CHOCK | CALCE | SPESSORE | CALÇO |
| CIRCLIPS | CIRCLIPS | CIRCLIPS | FREIO DE RETENÇÃO |
| CLEVIS | HORQUILLA | RIVESTIMENTO | CHAPA |
| CLOGGING INDICATOR | INDICADOR DE ATASCO | INDICATORE DI RIEMPIMENTO | INDICADOR DE OBSTRUÇÃO |
| COIL | BOBINA | BOBINA | BOBINA |
| COLLAR | COLLAR | COLLARE | BRAÇADEIRA |
| COMMON LABELS | ETIQUETAS COMUNES | ETICHETTE COMUNI | ETIQUETAS COMUNS |
| COMPLETE PCB PLATE | PLETINA CI COMPLETO | PIATTO CIRCUITO STAMPATO COMPLETO | PLATINA CI (CIRCUITO IMPRESSO) COMPLETA |
| COMPRESSED AIR OPTION | OPCIÓN AIRE COMPRIMIDO | OPZIONE ARIA COMPRESSA | OPÇÃO AR COMPRIMIDO |
| COMPRESSION SPRING | RESORTE DE COMPRESIÓN | MOLLA DI COMPRESSIONE | MOLA DE COMPRESSÃO |
| CONICAL BEARING | RODAMIENTO CONICO | CUSCINETTO CONICO | ROLAMENTO CÓNICO |
| CONICAL SPRING WASHER | ARANDELA MUELLE CÓNICO | RONDELLA MOLLA CONICA | ANILHA DE PRESSÃO CÓNICA |
| CONNECTOR | CONECTOR | CONNETTORE | FICHA |
| CONNECTOR | CONECTOR 9 VÍAS | CONNETTORE 9 VIE | |
| CONTACT | CONTACTO | CONTATTO | CONTACTO |
| CONVERTER | CONVERTIDOR | CONVERTITORE | CONVERSOR |

| English | Español | Italiano | Português |
|---|---|---|---|
| COUNTERWEIGHT ASSEMBLY | CONJUNTO CONTRAPESO | INSIEME CONTRAPPESI | CONJUNTO CONTRAPESO |
| COUPLING | ACOPLADOR | GIUNTO | ACOPLADOR |
| COVERS | REVESTIMIENTO | RIVESTIMENTO | REVESTIMENTO |
| COWLING ASSY | CONJUNTO CAPOTADO | INSIEME PROTEZIONI | CONJUNTO CAPOTAGEM MASTRO |
| CYL. ROLLER BEARING | RODAMIENTO RODILLOS CIL. | CUSCINETTO A RULLI CILIND. | ROLAMENTO ROLOS CILINDROS |
| CYLINDER LOWERING STANDBY CONTROL | MANDO DE EMERGENCIA DESCENSO GATO | COMANDO DI SOCCORSO DISCESA MARTINETTO | COMANDO DE EMERGÊNCIA DESCIDA MACACO |
| DENMARK LABELS | ETIQUETAS DINAMARCA | ETICHETTA DANIMARCA | ETIQUETAS DINAMARCA |
| DIFFERENTIAL CIRCUIT BREAKER OPTION | OPCIÓN DISY. DIF. | OPZIONE INTERRUTTORE DIFFERENZIALE | OPÇÃO DISJUNÇÃO DIFERENCIAL |
| DO NOT GO DOWN LABEL | ETIQUETA "NO BAJAR" | ETICHETTA "NON SCENDERE" | ETIQUETA "NÃO DESCER" |
| DOCUMENT HOLDER | PORTADOCUMENTOS | PORTA DOCUMENTI | PORTA-DOCUMENTOS |
| DRILLED BLOCK | BLOQUE FORE | BLOCCO FORATO | BLOCO PERFURADO |
| DRIVING AXLE-(TREE) | EJE MOTOR | ASSE MOTORE | EIXO MOTOR |
| DUAL ROD CYLINDER | GATO DOBLE VARILLA | MARTINETTO DOPPIA ASTA | CILINDRO DUPLA HASTE |
| ELECTRICAL CABINET | CAJA ELÉCTRICA | ARMADIETTO ELETTRICO | CAIXA ELÉCTRICA |
| ELECTRO BRAKE | FRENO ELECTROMAGNÉTICO | FRENO ELETTROMAGNETICO | TRAVÃO ELECTROMAGNÉTICO |
| EMERGENCY LOWERING | BAJADA DE SOCORRO | DISCESA DI SICUREZZA | DESCIDA DE EMERGÊNCIA |
| EMERGENCY LOWERING | BAJADA DE SOCORRO | DISCESA DI SICUREZZA | DESCIDA DE EMERGÊNCIA |
| EMERGENCY LOWERING BLOCK | BLOQUE BAJADA DE EMERGENCIA | BLOCCO DISCESA EMERGENZA | BLOCO DESCIDA EMERGÊNCIA |
| EMERGENCY STOP | PARADA DE EMERGENCIA | ARRESTO DI EMERGENZA | PARAGEM DE EMERGÊNCIA |
| EQUAL T-PIECE | TE IGUAL | TE UGUALE | TÊ IGUAL |
| FAN | VENTILADOR | VENTILATORE | VENTILADOR |
| FASTENING FLANGE | BRIDA DE FIJACIÓN | FLANGIA PER FISSAGGIO | FLANGE DE FIXAÇÃO |
| FEMALE BOX | CAJA HEMBRA | SCATOLA FEMMINA | CARTER FÊMEA |
| FEMALE CONNECTOR | CONECTOR HEMBRA | CONNETTORE FEMMINA | FICHA FÊMEA |
| FILTER | FILTRO | FILTRO | FILTRO |
| FINLAND LABELS | ETIQUETAS FINLANDIA | ETICHETTE FINLANDIA | ETIQUETAS FINLÂNDIA |
| FITTING | RACOR | RACCORDO | UNIÃO |
| FIXED COMB FOR CHAIN | PEINE FIJO PARA CADENA | PETTINE FISSO PER CATENA | PENTE FIXO PARA CORRENTE |
| FIXED MAST | MÁSTIL FIJO | ALBERO FISSO | MASTRO FIXO |
| FLANGE | BRIDA | FLANGIA | FLANGE |
| FLANGED BLOCK | BLOQUE BRIDADO | BLOCCO FLANGIATO | BLOCO DA TAMPA |
| FLASHING LIGHT | LUZ DE DESTELLOS | FANALE A BAGLIORE | LUZ INTERMITENTE |
| FLASHING LIGHTS OPTION | OPCIÓN LUZ DE DESTELLOS | OPZIONE FARO A LAMPI | OPÇÃO LUZES DE EMERGÊNCIA |
| FLAT | PLATO | FERRO PIATTO | PRATO |
| FLAT WASHER | ARANDELA PLANA | RONDELLA PIATTA | ANILHA PLANA |

| English | Español | Italiano | Português |
|---|---|---|---|
| FLOOR HEIGHT + LOAD LABEL | ETIQUETA "ALTURA PISO" | ETICHETTA "ALTEZZA PAVIM" | ETIQUETA "ALTURA PISO..." |
| FORBIDDEN LABEL | ETIQUETA "PROHIBIDO" | ETICHETTA " DIVIETO ..." | ETIQUETA «PROIBIÇÃO» |
| FRENCH LABELS | ETIQUETAS FRANCIA | ETICHETTE FRANCIA | ETIQUETAS FRANÇA |
| FUSE | FUSIBLE | FUSIBILE | FUSÍVEL |
| FUSE HOLDER | PORTAFUSIBLE | PORTAFUSIBILE | PORTA-FUSÍVEL |
| GAITER | FUELLE | SOFFIETTO | FOLE |
| GANTRY ASSY. | CONJUNTO PLATAFORMA | INSIEME PIATTAFORMA | CONJUNTO CESTA |
| GEL BATTERY OPTION | OPCIÓN BATERÍA GEL | OPZIONE BATTERIA GEL | OPÇÃO BATERIA GELO |
| GERMANY LABELS | ETIQUETTES RFA | ETICHETTE GERMANIA | ETIQUETAS RFA |
| GREEN ARROW | FLECHA VERDE | FRECCIA VERDE | LANÇA VERDE |
| GREEN INDICATOR LIGHT | PILOTO VERDE | SPIA VERDE | LUZ AVISADORA VERDE |
| GROMMET | ARANDELA AISLANTE PASA-HILO | PASSAFILO | PASSA-FOIS |
| GUARDRAIL | ANTEPECHOS | RINGHIERA | PARAPEITO |
| GUIDE | GUÍA | GUIDA | GUIA |
| GUIDE PAD | PATÍN DE GUÍA | PATTINO DI GUIDA | PATIM DE GUIA |
| GUIDE RING | ANILLO DE GUIADO | ANELLO GUIDA | CASQUILHO DE GUIA |
| GUIDING AXLE-(TREE) | EJE DIRECTOR | ASSE DI GUIDA | EIXO DIRECTOR |
| HAND PUMP | BOMBA DE MANO | POMPA A MANO | BOMBA MANUAL |
| HANDLING OPTION | OPCIÓN DE MANIPULACIÓN | OPZIONE MOVIMENTAZIONE | Opção manutenção |
| HARNESS KIT | KIT DE MANGUERAS | KIT FASCIO | Pacote feixes |
| HAULOTTE GROUP LOGO | GRAFISMO HAULOTTE GROUP | GRAFICA HAULOTTE GROUP | GRAFISMO DO GRUPO HAULOTTE |
| HEAT INSULATION | AISLANTE TÉRMICO | ISOLANTE TERMICO | ISOLANTE TÉRMICO |
| HOISTING EYE | ANILLO DE ELEVACIÓN | ANELLO DI SOLLEVAMENTO | ANEL DE ELEVAÇÃO |
| HOLDER | SOPORTE | SUPPORTO | SUPORTE |
| HOLLAND LABELS | ETIQUETAS HOLANDA | ETICHETTE OLANDA | ETIQUETAS HOLANDA |
| HORN (WARNING SIGNAL) | ADVERTIDOR CLAXON | SEGNALE CLACSON | AVISADOR CÚSTICO |
| HUB | CUBO | MOZZO | CUBO |
| HUB PLUG | TAPÓN DE CUBO | TAPPO MOZZO | BUJÃO DE CUBO |
| HYDRAULIC SECTION | CONJUNTO HIDRÁULICO | INSIEME IDRAULICA | CONJUNTO HIDRÁULICO |
| HYDRAULIC TUBE | TUBO HIDRÁULICO | TUBO IDRAULICO | TUBO HIDRÁULICO |
| INSERT | INSERCIÓN | INSERTO | ENCAIXE |
| interface | | | |
| INTERMEDIATE GUARDRAIL | BARANDILLA INTERMEDIA | CORRIMANO INTERMEDIO | BALAUSTRADA INTERMEDIÁRIA |
| JIB ASSEMBLY | CONJUNTO PENDULAR | INSIEME BRACCIO OSCILLANTE | CONJUNTO PENDULAR |
| JUNCTION | UNIÓN | UNIONE | JUNÇÃO |

| English | Español | Italiano | Português |
|---|---|---|---|
| JUNCTION BLOCK | BLOQUE DE UNIÓN | BLOCCO DI COLLEGAMENTO | Bloco de junção |
| KEY | CHAVETA | CHIAVETTA | CHAVETA |
| KEY SELECTOR | SELECTOR DE LLAVE | SELETTORE A CHIAVE | Selector de chave |
| KNURLED KNOB | BOTÓN MOLETEADO | PULSANTE ZIGRINATO | BOTÃO POLIDO |
| LABEL- WARRANTY ACTIVATION | ETIQUETA "ACTIVACIÓN GARANTÍA" | ETICHETTA " INIZIO GARANZIA " | ETIQUETA «ACCIONAMENTO GARANTIDO» |
| LABELS | ETIQUETAS | ETICHETTAS | ETIQUETAS |
| LATCH | PESTILLO | LEVETTA DI CHIUSURA | TRINCO |
| LEFT HOOD | CAPÓ IZQUIERDO | COFANO SINISTRO | CAPÔ ESQUERDO |
| LENS | LENTE | LENTE | LENTE |
| LEVER | PALANCA | LEVA | ALAVANCA |
| LIFTING CYLINDER | GATO ELEVACIÓN | MARTINETTO SOLLE | CILINDRO DE ELEVAÇÃO |
| LIGHT | PILOTO | SPIA | LUZ AVISADORA |
| LINK ROD | BIELITA | BIELLETTA | TIRANTE |
| LOAD ON ONE WHEEL | CARGA EN 1 RUEDA | CARICO SU 1 RUOTA | CARGA NUMA RODA |
| LOCK | HUSILLO | PUNZONE | PINO |
| LOGO | GRAFISMO | GRAFICA | GRAFISMO |
| LOOM | HAZ | FASCIO | FEIXE |
| LOWER BOX CABLING | CABLEADO COFRE TORRETA | CABLAGGIO CASSETTA TORRETTA | CABLAGEM CAIXA TORRE |
| LOWER PANEL | PUPITRE BAJO | CONSOLLE INFERIORE | MESA INFERIOR |
| LUG | TERMINALE | TESTE | TERMINAL |
| MAINTENANCE LOG | LIBRETA DE MANTENIMIENTO | LIBRETTO DI MANUTENZIONE | CADERNO DE MANUTENÇÃO |
| MALE CONNECTOR | | | |
| MALE EVEN BEND | CODO MACHO | GOMITO MASCHIO | JOELHO MACHO |
| MALE UNION | UNIÓNMACHO | UNIONE MASCHIO | UNIÃO MACHO |
| MANIFOLD | COLECTOR | COLLETTORE | COLECTOR |
| MANUFACTURER PLATE | PLACA CONSTRUCTOR | TARGA COSTRUTTORE | PLACA DO CONSTRUTOR |
| MAST FOOT | PIE DE MÁSTIL | PIEDE DALBERO | PÉ DE MASTRO |
| METAL FRAME PROFILE | PERFIL ARMADURA METÁLICA | SAGOMA ARMATURA METALLICA | PERFIL ARMAÇÃO METÁLICA |
| MODULE | MÓDULO | MODULO | MÓDULO |
| MOULDED COUNTERWEIGHT | CONTRAPESO MOLDEADO | CONTRAPPESO FUSO | CONTRAPESO MOLDADO |
| NUT | TUERCA | DADO | PORCA |
| O-RING | JUNTA TÓRICA | GIUNTO TORICO | JUNTA TÓRICA |
| OIL LEVEL | NIVEL DE ACEITE | LIVELLO OLIO | NÍVEL DE ÓLEO |
| ON/OFF | ON/OFF | ON/OFF | ON/OFF |
| ON/OFF MOVEMENTS BLOCK | BLOQUE MOVIMIENTOS TODO O NADA | BLOCCO MOVIMENTI TUTTO O NIENTE | BLOCO MOVIMENTOS TUDO OU NADA |

| English | Español | Italiano | Português |
|---|---|---|---|
| ONE-WAY VALVE | MARIPOSA ANTIRRETROCESO | VALVOLA ANTI-RITORNO | VÁLVULA ANTI-RETORNO |
| OPERATING MANUAL | MANUAL USUARIO | MANUALE UTENTE | MANUAL DE UTILIZAÇÃO |
| OPERATOR MANUAL | MANUAL DE OPERACIÓN Y MANTENIMIENTO | MANUALE DE GUIDA E MANUTENZIONE | MANUAL CE |
| OPERATOR MANUAL | MANUAL DEL OPERADOR | GUIDA DELL'OPERATORE | MANUAL DO OPERADOR |
| OPTION | OPCIÓN | OPZIONE | OPÇÃO |
| OPTION | OPCIÓN | OPZIONE | OPÇÃO |
| OSCILLATING CASE | CAJÓN OSCILANTE | CASSONE OSCILLANTE | CAIXA OSCILANTE |
| OWNER'S MANUAL | MANUAL DEL USUARIO | GUIDA UTENTE | OWNER'S MANUAL |
| PENDULAR ARM | BRAZO PENDULAR | BILANCIERE PENDOLARE | BRAÇO PENDULAR |
| PIN | CASQUILLO | MANICOTTI | CASQUILHO |
| PIN | PASADOR | BIETTA | CAVILHA |
| PIN- PULLEY | EJE DE POLEA | ASSE DI PULEGGIA | EIXO DE POLIA |
| PIN- TIE ROD | EJE DE TIRANTE | ASSE DEL TIRANTE | EIXE DE TIRANTE |
| PLASTIC PROTECTION DEVICE | PROTECCIÓN PLÁSTICO | PROTEZIONE PLASTICA | PROTECÇÃO PLÁSTICA |
| PLASTIC SPIRAL HOSE | ESPIRAL PLÁSTICO FLEXIBLE | SPIRALE PLASTICA FLESSIBILE | ESPIRAL PLÁSTICO FLEXÍVEL |
| PLATE | PLETINA | PIASTRA | PLATINA |
| PLATFORM + JIB | PLATAFORMA + PENDULAR | PIATTAFORMA + BRACCIO OSCILLANTE | PLATAFORMA + PENDULAR |
| PLUG | TAPÓN | TAPPO | BUJÃO |
| PLUG | CLAVIJA | SPINA | FICHA |
| PLUG CONTACT | CONTACTO MACHO | CONTATTO MASCHIO | CONTACTO MACHO |
| PLUG SOCKET | ETIQUETA "TOMA 240V" | ETICHETTA "PRESA 240 V" | ETIQUETA "TOMADA 240V" |
| PLUG SOCKET | TOMA | PRESA | TOMADA |
| PORTUGAL LABELS | ETIQUETAS PORTUGAL | ETICHETTE PORTOGALLO | ETIQUETAS PORTUGAL |
| POSITION SWITCH | INTERRUPTOR DE POSICIÓN | INTERRUTTORE DI POSIZION | INTERRUPTOR DE POSIÇÃO |
| POTENTIOMETER | POTENCIÓMETRO | POTENZIOMETRO | POTENCIÓMETRO |
| POWER SUPPLY LIFTING DEVICE OPTION | OPCIÓN ALIM EN BARQUILLA | OPZIONE ALIM. CESTELLO | OPÇÃO ALIM PLATAFORMA |
| POWER SUPPLY SECTION | CONJUNTO ELECTRICIDAD | INSIEME ELETTRICITÀ | CONJUNTO ELECTRICIDADE |
| PRESSURE FILTER | FILTRO PRESIÓN | FILTRO PRESSIONE | FILTRO PRESSÃO |
| PRESSURISED LIQUID LABEL | ETIQUETA FLUIDO BAJO PRESIÓN | ETICHETTA FLUIDO SOTTO PRESSIONE | ETIQUETA FLUIDO SOB PRESSÃO |
| PRINTED CIRCUIT | CIRCUITO IMPRESO | CIRCUITO STAMPATO | CIRCUITO IMPRESSO |
| PROTECTION | PROTECCION | PROTEZIONE | PROTECCÃO |
| PROTECTIVE CAP | TAPÓN DE PROTECCIÓN | TAPPO DI PROTEZIONE | BUJÃO DE PROTECÇÃO |
| PROTECTIVE HOOD | TAPA DE PROTECCIÓN | COFANO DI PROTEZIONE | COBERTURA DE PROTECÇÃO |
| PROTECTIVE PLATE | CHAPA DE PROTECCIÓN | LAMIERA DI PROTEZIONE | CHAPA DE PROTECÇÃO |
| PULLEY | POLEA | PULEGGIA | POLIA |

| English | Español | Italiano | Português |
|---|---|---|---|
| PUMP | BOMBA | POMPA | BOMBA |
| PUSH BUTTON | BOTÓN PULSADOR | PULSANTE | BOTÃO DE PRESSÃO |
| RAIL | BARRA | LISTONE | CORRIMÃO |
| RAPID FASTENER | EMPALME RÁPIDO | RACCORDO RAPIDO | JUNÇÃO RÁPIDA |
| RECEPTACLE | RECEPTACULO | BACINO DI RACCOLTA | RECEPTÁCULO |
| RED ARROW | FLECHA ROJA | FRECCIA ROSSA | LANÇA VERMELHA |
| RED LIGHT INDICATOR | PILOTO ROJO | SPIA ROSSA | SINAL LUMINOSO VERMELHO |
| RELAY | RELÉ | RELÈ | RELÉ |
| RELIEF VALVE | | | |
| RETAINER WASHER | ARANDELA DE RETENCIÓN | RONDELLA DI RITENUTA | ANILHA DE RETENÇÃO |
| RIDGED CONICAL WASHER | ARANDELA CÓNICA ESTRIADA | RONDELLA CONICA SCANALATA | ANEL CÓNICO ESTRIADO |
| RIGHT HOOD | CAPÓ DERECHO | COFANO DESTRO | CAPÔ DIREITO |
| RIM | LLANTA | CERCHIONE | JANTE |
| RING- RUBBER | ANILLO ELÁSTICO | ANELLO ELASTICO | ANILHA DE FREIO |
| ROTOR | ROTOR | ROTORE | Rotor |
| RUBBER SEAL | JUNTA DE CAUCHO | GIUNTO IN GOMMA | JUNTA DE BORRACHA |
| SAFETY SEAL PLUG | TAPÓN OPÉRCULO | TAPPO FORO | BUJÃO OPÉRCULO |
| SCRAPER SEAL | JUNTA DEL RASCADOR | GUARNIZIONE RASCHIATORE | Junta de raspador |
| SCREW | TORNILLO | VITE | PARAFUSO |
| SEAL | JUNTA | GIUNTO | JUNTA |
| SEAL KIT | BOLSITA DE JUNTAS | BUSTINA DI GIUNTI | EMBALAGEM DE JUNTAS |
| SEALING RING | JUNA DE ESTANQUEIDAD | GUARNIZIONE DI TENUTA | JUNTA DE VEDAÇÃO |
| SELF-LOCKED NUT | TUERCA DE AUTOFRENADO | DADO AUTOFRENATO | PORCA DE SEGURANÇA |
| SENSOR SUPPORT | SOPORTE CAPTADOR | SUPPORTO SENSORE | SUPORTE CAPTADOR |
| SERIAL BOARD | TARJETA SERIAL | CARTA SERIAL | CARTA SERIAL |
| SHAFT SEAL | JUNTA DEL ÁRBOL | GIUNTO ALBERO | Junta de eixo |
| SHAFT- OUTPUT | ÁRBOL DE SALIDA | ALBERO DI USCITA | VEIO DE SAÍDA |
| SHEET METAL SUPPORT | CHAPA SOPORTE | LAMIERA SUPPORTO | CHAPA SUPORTE |
| SHUNT | SHUNT | SHUNT | SHUNT |
| SINGLE-AXIS JOYSTICK | MANIPULADOR 1 EJE | MANIPOLATORE 1 ASSE | MANIPULADOR 1 EIXO |
| SLEEVE | MANGUITO | MANICOTTO | MANGA |
| SLEW BEARING | CONJUNTO CORONA ORIENTACIÓN | INS. CORONA ORIENT. | CONJ.COROA DE ORIENTAÇÃO |
| SLEW RING | CORONA DE ORIENTACIÓN | CORONA DI ORIENTAZIONE | COROA DE ORIENTAÇÃO |
| SLOPE SENSOR | DETECTOR DE INCLINACIÓN | RIVELATORE DI INCLINAZIONE | DETECTOR DE INCLINAÇÃO TRANSVERSAL |
| SLOTTED SCREW | TORNILLO CABEZA REDONDA HENDIDA | VITE FUMISTA A INTAGLIO | |

| English | Español | Italiano | Português |
|---|---|---|---|
| SOCKET CONTACT | CONTACTO HEMBRA | CONTATTO FEMMINA | CONTACTO FÊMEA |
| SOLENOID VALVE | ELECTROVÁLVULA | ELETTROVALVOLA | ELECTROVÁLVULA |
| SPACER | DISTANCIADOR | DISTANZIATORE | ESPAÇADOR |
| SPAIN LABELS | ETIQUETAS ESPAÑA | ETICHETTE SPAGNA | ETIQUETAS ESPANHA |
| SPARE PARTS MANUAL | CATÁLOGO PR | CATALOGO PR | CATÁLOGO PEÇAS SOBRESSELENTES |
| SPLIT PIN | PASADOR DE ALETAS | COPPIGLIA TAGLIATA | CAVILHA FENDIDA |
| SPRING | RESORTE | MOLLA | MOLA |
| STEERING CYLINDER | GATO DE DIRECCIÓN | MARTINETTO DI DIREZIONE | CILINDRO DE DIRECÇÃO |
| STUD | ESPIGA | CAVICCHIO | PERNO |
| SUB-FRAME | CHASIS | TELAIO | CHASSIS |
| SUPPLY | ALIMENTACIÓN | ALIMENTAZIONE | ALIMENTAÇÃO |
| SUPPORT LUG | PATA SOPORTE | FLANGIA SUPPORTO | GANCHO DE SUPORTE |
| SWITCH BOX | CONMUTADOR | COMMUTATORE | COMUTADOR |
| Temperature sensor | CAPTADOR DE TEMPERATURA | SENSORE DI TEMPERATURA | |
| TERMINAL BLOCK | REGLETA | MORSETTIERA | DELIMITADOR |
| TERMINAL PARTITION BLOCK | BLOQUE PARED TERMINAL | BLOCCO TRAMEZZO TERMINALE | BLOCO PAREDE TERMINAL |
| THRUST WASHER | ARANDELA DE TOPE | RONDELLA DI FERMO | ANILHA DE BATENTE |
| THUMB WHEEL | MOLETA | RONDELLA | Mola |
| TIE ROD | TIRANTE | TRAVE | TIRANTE |
| TIGHTENING COLLAR | ABRAZADERA APRIETE | COLLARE DI SERRAGGIO | BRAÇADEIRA DE APERTO |
| TIRE | NEUMÁTICO | PNEUMATICO | PNEU |
| TRACTION BATTERY ASSEMBLY | CONJUNTO BATERÍA TRACCIÓN | INSIEME BATTERIA TRAZIONE | CONJUNTO BATERIA TRACÇÃO |
| TRACTION BATTERY OPTION | OPCIÓN BATERÍA TRACCIÓN | OPZIONE BATTERIA TRAZIONE | OPÇÃO DA BATERIA DE TRACÇÃO |
| TURN KNOB HEAD | CABEZA DE BOTÓN GIRATORIO | TESTA DI MANOPOLA GIREVOLE | CABEÇA DE BOTÃO ROTATIVO |
| TURNTABLE CONTROL BOX | ETIQUETA PUPITRE TORRETA | ETICHETTA QUADRO TORRETTA | ETIQUETA MESA TORRE |
| TURNTABLE ELECTRICITY | ELECTRICIDAD TORRETA | ELETTRICITÀ TORRETTA | ELECTRICIDADE TORRE |
| TURRET UNIT | GRUPO TORRETA | GRUPPO TORRETTA | GRUPO TORRE |
| UPPER CONTROL BOX | PUPITRE ALTO | CONSOLLE SUPERIORE | MESA SUPERIOR |
| UPPER CONTROL BOX | PUPITRE BARQUILLA | QUADRO PIATTAFORMA | MESA PLATAFORMA |
| USA OPTION | OPCIÓN EE.UU | OPZIONE USA | OPÇÃO USA |
| USER MANUAL | MANUAL DEL USUARIO | MANUALE D'USO | Manual do utilizador |
| WASHER | ARANDELA | RONDELLA | ANILHA |
| WATER PROOF BATTERY CHARGER | CARGADOR DE BATERÍA ESTANCO | CARICATORE DI BATTERIA A TENUTA STAGNA | CARREGADOR DE BATERIA ESTANQUE |
| WATER PROOF BATTERY CHARGER | CARGADOR DE BATERÍA ESTANCO | CARICATORE DI BATTERIA A | CARREGADOR DE BATERIA ESTANQUE |
| WEARING (OF) SAFETY HARNESS | USO DE ARNÉS | INDOSSARE IMBRACATURE | PORTE DE ARNÊS |

| English | Español | Italiano | Português |
|---|---|---|---|
| WHEEL HUB | CUBO DE RUEDA | MOZZO DI RUOTA | CUBO DE RODA |
| WINDER | BOBINADORA | AVVOLGITORE | ENROLADOR |
| WIRE | HILO | FILO | FIO |
| | | | |
| | | | |
| | | | |
| | | | |
| | | | |
| | | | |
| | | | |
| | | | |
| | | | |
| | | | |
| | | | |
| | | | |
| | | | |
| | | | |
| | | | |
| | | | |
| | | | |
| | | | |
| | | | |
| | | | |
| | | | |
| | | | |
| | | | |
| | | | |
| | | | |
| | | | |
| | | | |
| | | | |
| | | | |
| | | | |
| | | | |
| | | | |
| | | | |

| English | Svenska | Suomi | Românà |
|---|---|---|---|
| « BATTERY CHARGE » LABEL | ETIKETT "BATTERILADDNING" | ETIKETTI "PARISTON LATAUS" | ETICHETA "INCARCARE BATERIE" |
| « BODY CRUSHING » LABEL | ETIKETT "SÖNDERKLÄMNING AV KROPPEN" | ETIKETTI "VARTALO VOI JÄÄDÄ PURISTUKSIIN" | ETICHETA "PERICOL DE RANIRE CORP" |
| « DIRECTION OF TRAVEL » LABEL | ETIKETT "KÖRRIKTNING" | ETIKETTI "KULJETUKSEN SUUNTA" | ETICHETA "SENS TRANSLATIE" |
| « DO NOT PARK » LABEL | ETIKETT "PARKERING FÖRBJUDEN" | ETIKETTI "ÄLÄ PYSÄKÖI" | ETICHETA "A NU STATIONA" |
| « ELECTROCUTION » LABEL | ETIKETT "ELSTÖT" | ETIKETTI "SÄHKÖISKUVAARA" | ETICHETA "PERICOL DE ELECTROCUTARE" |
| « OPERATING INSTRUCTIONS » LABEL | ETIKETT "INSTRUKTIONER FÖR ANVÄNDNING" | ETIKETTI "KÄYTTÖOHJEET" | ETICHETA "DISPOZITII DE FOLOSIRE" |
| « SLING LOAD » LABEL | ETIKETT "SLINGBELASTNING" | ETIKETTI "NOSTOSILMUKAN ASETUS" | ETICHETA "CABLU DE INCARCARE" |
| « TRUCK FORK » LABEL | ETIKETT "TRUCKGAFFEL" | ETIKETTI "HAARUKKAKULJETIN" | ETICHETA "FURCA DE TRACTARE" |
| ACCESS FLAP | INSPEKTIONSLUCKA | PÄÄSYLUUKKU | TRAPA DE ACCES |
| ADAPTOR | ADAPTER | NAARASADAPTERI | ADAPTOR |
| ADHESIVE BASE | VIDHÄFTANDE SOCKEL | TARRAPISTORASIA | SOCLU ADEZIV |
| ADHESIVE TAPE- NON-SLIP | SLIRFRI TEJP | LIUKUESTETARRA | ADEZIV ANTIDERAPANT |
| ADJUSTABLE BEND | INSTÄLLBART KNÄRÖR | KÄÄNTYVÄ TAIVE | COT ORIENTABIL |
| ADJUSTING WASHER | JUSTERBRICKA | SÄÄTÖLAATTA | SAIBA DE REGLARE |
| ALARM | LARM | HÄLYTIN | ALARMA |
| ANTI-SKIDDING MECHANISM | FÄSTE | LUISTONESTO | |
| AUSTRALIA LABELS | DEKALER, AUSTRALIEN | ETIKETIT AUSTRALIA | ETICHETE AUSTRALIA |
| BALL BEARING | KULLAGER | KUULATELA | RULMENTCU BILE |
| BASE | SOCKEL | KEHYS | PLACA DE BAZA |
| BASKET ASSEMBLY | KORGENHET | KORIJÄRJESTELMÄ | ANSAMBLU PLASA PESCUIT |
| BATTERY | BATTERI | SUOJUKSEN KIINNITYSRIPA | BATERIE |
| BATTERY BOX | BATTERILÅDA | PARISTOKOTELO | CHESON DE BATERIE |
| BATTERY CHARGE EXTERNAL INDICATOR | YTTRE BATTERILADDNINGSINDIKATOR | ULKOINEN AKKULATAUSINDIKAATTORI | INDICATOR EXTERIOR DE ÎNCARCARE A BATERIEI |
| BATTERY CHARGER | BATTERILADDARE | PARISTON LATAAJA | INCARCATOR DE ACUMULATOR / BATERIE |

| English | Svenska | Suomi | Românà |
|---|---|---|---|
| BATTERY CHARGER | BATTERILADDARE | PARISTON LATAAJA | INCARCATOR DE ACUMULATOR / BATERIE |
| BATTERY UNIT | BATTERIENHET | AKKUKOKONAISUUS | |
| BATTERY WITH KIT | BATTERI MED KIT | Akkupakkaus | |
| BEARING | LAGER | LAAKERI | RULMENT |
| BEND | KNÄRÖR | TAIVE | COT |
| BIODEGRADABLE OIL | BIOLOGISKT NEDBRYTBAR OLJA | BIOLOGISESTI HAJOAVA ÖLJY | ULEI BIODEGRADABIL |
| BLOCK | BLOCK | LOHKO | BLOC |
| BLOCK | HUS | RUNKO | CORP |
| BOLT WITHOUT CLASP | LÅS UTAN ANSLAG | SYLINTERI ILMAN LUKKOA | ZAVOR FARA SCOABA, BRIDA |
| BOX | LÅDA | KOTELO | CHESON |
| BOX | LÅDA | ASIA | CARCASA CUTIE |
| BRIUSHES | KOL | HIILI | |
| BRUSH SUPPORT | BORSTHÅLLARE | Harja-alusta | |
| BUNDLES | ENH. KABELHÄRVOR | SÄDEKIMPPUKOKONAISUUS | |
| BUSH | RING | RENGAS | BUCSA |
| BUTTON BOX | | | |
| CABLE | KABEL | VAIJERI | CABLU |
| CAN | DUNK | BIDON | BIDON |
| CARTRIDGE | INSATS | KASETTI | CARTUS |
| CE ITAL LABELS | DEKALER ITALIEN | ETIKETTI ITALIA | |
| CENTRAL HYDRAULIC PLANT | HYDRULBEHÅLLARE | HYDRAULIIKKAKESKUS | CENTRALA HIDRAULICA |
| CENTRALISED FILLING | CENTRALSTYRD PÄFYLLNING | LAVERRELLA KÄTEINEN ARVO | |
| CHAIN | KEDJA | KETJU | LANT |
| CHAIN SLACK OPTION | TILLVAL RULLNING AV KEDJOR | LISÄVARUSTE KETJUJEN LÖYSTYMINEN | |
| CHAIN SUPPORT | | | |
| CHAIN YOKE | KEDJELOCK | AKSELIPINTA | |
| CHARGER | LADDARE | LATURI | |
| CHARGER CONNECTION | LADDARANSLUTNING | LATURILIITOS | RACORD ÎNCARCATOR |
| CHARGER OPTION | TILLVAL, LASTARE | KUORMAUSVALINTA | |
| CHARGER UNIT | LADDENHET | LATURIKOKONAISUUS | |
| CHOCK | KIL | KIILA | CALA |
| CIRCLIPS | FJÄDERRING | LUKKORENGAS | INEL DE BLOCARE ELASTIC |
| CLEVIS | KÄPA | KANSI | CAPAC |

| English | Svenska | Suomi | Românà |
|---|---|---|---|
| CLOGGING INDICATOR | INDIKATOR FÖR IGENSÄTTNING | SILOTUSOSOITIN | |
| COIL | SPOLE | KELA | BOBINA |
| COLLAR | KLAMMA | KIINNITIN | BANDA BRATARA COLIER |
| COMMON LABELS | GEMENSAMMA DEKALER | ETIKETTI ALHAINEN | |
| COMPLETE PCB PLATE | KOMPLETT KRETSKORTSPLATTA | TÄYDELLINEN CI ALUSLEVY | PLATINA CI COMPLET |
| COMPRESSED AIR OPTION | TILLVAL TRYCKLUFT | PAINEILMAVAIHTOEHTO | |
| COMPRESSION SPRING | TRYCKFJÄDER | PURISTUSJOUSI | ARC DE COMPRESIE |
| CONICAL BEARING | KONISKT RULLAGER | KARTIOLAAKERI | RULMENT CONIC |
| CONICAL SPRING WASHER | KONISK FJÄDERBRICKA | Kartiomainen jousi-aluslevy | |
| CONNECTOR | ANSLUTNING | LIITIN | CONECTOR |
| CONNECTOR | KONTAKT MED 9 STIFT | 9-URAINEN LIITIN | |
| CONTACT | KONTAKT | | CONTACTOR LIMITATOR RAZA DE ACTIUNE |
| CONVERTER | OMVANDLARE | MUUNNIN | CONVERTIZOR |
| COUNTERWEIGHT ASSEMBLY | MOTVIKTSENHET | VASTAPAINOJÄRJESTELMÄ | ANSAMBLU CONTRA-GREUTATE |
| COUPLING | KOPPLINGSANORDNING | LIITÄNTÄ | CUPLA |
| COVERS | BEKLÄDNAD | Sylinteripeite | |
| COWLING ASSY | KÅPA | SUOJAKOTELOKOKONAISUUS | |
| CYL. ROLLER BEARING | RULLAGER CYL. | RULLALAAKERISYLINTERI | |
| CYLINDER LOWERING STANDBY CONTROL | NÖDREGLAGE FÖR CYLINDERSÄNKNING | SYLINTERIN LASKU HÄTÄOHJAUKSELLA | |
| DENMARK LABELS | DEKALER DANMARK | ETIKETTI TANSKA | |
| DIFFERENTIAL CIRCUIT BREAKER OPTION | TILLVAL DIFF. STRÖMBR. | HIDASTETTU KYTKINVAIHTOEHTO | |
| DO NOT GO DOWN LABEL | DEKAL "SÄNK INTE" | ETIKETTI "LASKEUTUMINEN KIELLETTY" | ETICHETA " A NU SE COBORI" |
| DOCUMENT HOLDER | DOKUMENTHÅLLARE | ASIAKIRJATELINE | PORT-DOCUMENTE |
| DRILLED BLOCK | BORRAT BLOCK | PORAUSLOHKO | BLOC FORAT |
| DRIVING AXLE-(TREE) | MOTORHJULAXEL | MOOTTORIAKSELI | |
| DUAL ROD CYLINDER | cylinder med dubbel kolvstång | KAKSINKERTAINEN VARSISYLINTERI | CRIC CU DUBLA TIJA |
| ELECTRICAL CABINET | KOPPLINGSDOSA | SÄHKÖKOTELO | CUTIE ELCTRICA |
| ELECTRO BRAKE | ELEKTROMAGNETISK BROMS | SÄHKÖMAGNEETTINEN JARRU | |

| English | Svenska | Suomi | Românà |
|---|---|---|---|
| EMERGENCY LOWERING | HJÄLPREGLAGE FÖR NEDSÄNKNING | HÄTÄLASKUMEKANISMI | COLOANA DE SPRIJIN |
| EMERGENCY LOWERING | HJÄLPREGLAGE FÖR NEDSÄNKNING | HÄTÄLASKUMEKANISMI | COLOANA DE SPRIJIN |
| EMERGENCY LOWERING BLOCK | EXTRA BLOCK FÖR NEDSÄNKNING | HÄTÄALASTULOALUSTA | |
| EMERGENCY STOP | NÖDSTOPP | HÄTÄPYSÄYTYS | OPRIRE DE URGENTA |
| EQUAL T-PIECE | JÄMN T-KOPPLING | SAMANARVOINEN T-KAPPALE | TE EGAL |
| FAN | FLÄKT | TUULETIN | |
| FASTENING FLANGE | FLÄNS FÖR FASTSÄTTNING | PIDIKE | BRIDA DE FIXARE |
| FEMALE BOX | DOSA, HONTYP | Naarasjakorasia | |
| FEMALE CONNECTOR | ANSLUTNING AV HONTYP | NAARASLIITIN | CONECTOR MAMA |
| FILTER | FILTER | SUODATIN | FILTRU |
| FINLAND LABELS | FINLÄNDSKA DEKALER | ETIKETIT SUOMI | ETICHETE FINLANDA |
| FITTING | ANSLUTNING | KAPPALE | RACORD |
| FIXED COMB FOR CHAIN | FAST KAM FÖR KEDJA | KETJUN KIINTEÄ LEUKA | |
| FIXED MAST | PACKET SÄKRINGAR & RELÄER | KIINTEÄ MASTO | CATARG FIX |
| FLANGE | FLÄNS | PIDIKE | BRIDA FLANSA CLAMA |
| FLANGED BLOCK | SLAPPT BLOCK | JOUSTAVA RUNKO | |
| FLASHING LIGHT | BLINKLJUS | VILKKUVALO | SEMNAL LUMINOS |
| FLASHING LIGHTS OPTION | TILLVAL BLINKLJUS | VILKKUVALOVAIHTOEHTO | |
| FLAT | PLATTJÄRN | LAATTA | PLAT |
| FLAT WASHER | FLAT BRICKA | LITTEÄ LAATTA | SAIBA PLATA |
| FLOOR HEIGHT + LOAD LABEL | ETIKETT "GOLVHÖJD... " | ETIKETTI "POHJAN KORKEUS..." | ETICHETA "PLANSEU INALT" |
| FORBIDDEN LABEL | DEKAL "FÖRBUD " | TARRA "KIELTO" | ETICHETA "INTERDICTIE" |
| FRENCH LABELS | DEKALER FRANKRIKE | ETIKETTI RANSKA | |
| FUSE | SÄKRING | SULAKE | FUZIBIL |
| FUSE HOLDER | SÄKRINGSHÅLLARE | SULAKKEEN PIDIKE | PORT-FUZIBIL |
| GAITER | DAMASK | PALJE | BURDUF |
| GANTRY ASSY. | PLATTFORMSENHET | MOOTTORIKEHILÖT | ANSAMBLU NACELA |
| GEL BATTERY OPTION | TILLVAL BATTERI FROST | AKUN ROUTAVALINTA | |
| GERMANY LABELS | DEKALER RFA | ETIKETIT RFA | ETICHETE RFA |
| GREEN ARROW | GRÖN PIL | VIHREÄ NUOLI | SAGEATA VERDE |
| GREEN INDICATOR LIGHT | GRÖN KONTROLLAMPA | VIHREÄ MERKKIVALO | BEC DE SEMNALIZARE VERDE |
| GROMMET | KABELGENOMFÖRING | LANKAPUTKI | ORIFICIU PENTRU FIR |
| GUARDRAIL | RÄCKE | SUOJAKAIDE | BALUSTRADA |

| English | Svenska | Suomi | Românà |
|---|---|---|---|
| GUIDE | FÖRARE | OHJAIN | GHID |
| GUIDE PAD | STYRMED | OHJAUSLUISTIN | PATINA DE GHIDAJ |
| GUIDE RING | GLIDBUSSNING | OHJAUSRENGAS | INEL/BUCSA DE GHIDARE |
| GUIDING AXLE-(TREE) | HUVUDHJULAXEL | OHJAUSAKSELI | |
| HAND PUMP | HANDPUMP | KÄSIPUMPPU | POMPA DE MANA |
| HANDLING OPTION | TILLVAL UNDERHÅLL | KÄSITTELYN LISÄVARUSTE | |
| HARNESS KIT | SATS KABELHÄRVOR | JOHTOSARJOJEN HUOLTOSARJA | |
| HAULOTTE GROUP LOGO | SYMBOL HAULOTTE KONCERNEN | HAULOTTE ryhmän merkki | |
| HEAT INSULATION | VÄRMEISOLERMEDEL | LÄMPÖERISTYS | IZOLANT TERMIC |
| HOISTING EYE | LYFTRING | NOSTORENGAS | INEL DE RIDICARE |
| HOLDER | FÄSTE | TUKI | SUPORT |
| HOLLAND LABELS | NEDERLÄNDSKA DEKALER | ETIKETIT HOLLANTI | ETICHETE OLANDA |
| HORN (WARNING SIGNAL) | SIGNALHORN | ÄÄNITORVIVAROITIN | |
| HUB | NAV | NAPA | BUTUC |
| HUB PLUG | NAVPLUGG | NAVAN TULPPA | ORIFICIUL BUTUCULUI |
| HYDRAULIC SECTION | HYDRAULISK ENHET | HYDRAULINEN KOKONAISUUS | |
| HYDRAULIC TUBE | HYDRAULRÖR | HYDRAULIIKKAPUTKI | TUB(CONDUCTA) HIDRAULICA |
| INSERT | INLÄGG | VAHVIKE | INTRODUCERE/INSERARE |
| interface | | | |
| INTERMEDIATE GUARDRAIL | MELLANSKYDDSRÄCKE | VÄLISUOJAKAIDE | BALUSTRADA INTERMEDIARA |
| JIB ASSEMBLY | JIBBENHET | RIIPPUJÄRJESTELMÄ | ANSAMBLU PENDULAR |
| JUNCTION | SKARV | LIITOS | LEGATURA |
| JUNCTION BLOCK | UTTAGSPLINT | LIITOSLOHKO | |
| KEY | KIL | HAPSICHORD | |
| KEY SELECTOR | NYCKELVÄLJARE | AVAINTOIMINEN VALITSIN | |
| KNURLED KNOB | RÄFFLAD KNAPP | IRROTETTU PAINIKE | BUTON STRIAT |
| LABEL- WARRANTY ACTIVATION | DEKAL "AKTIVERING AV GARANTI" | TARRA "TAKUUN AKTIVOINTI" | ETICHETA"ACTIVITATE GARANTIE" |
| LABELS | ETIKETTER | | ETICHETE |
| LATCH | TÄT | SALPA | ZAVOR |
| LEFT HOOD | HUV VÄNSTER | VASEN KANSI | CAPOTA STANGA |
| LENS | LINS | LINSSI | LENTILA |
| LEVER | SPAK | VIPU | LEVIER |
| LIFTING CYLINDER | Lyftcylinder | NOSTOSYLINTERI | CRIC DE RIDICARE |

| English | Svenska | Suomi | Românà |
|---|---|---|---|
| LIGHT | KONTROLLAMPA | MERKKIVALO | VAZATOR |
| LINK ROD | STAG | TANKO | BIELETA |
| LOAD ON ONE WHEEL | BELASTNING PÅ 1 HJUL | KUORMA YHDELLÄ PYÖRÄLLÄ | ÎNCARCATURA PE O ROATA |
| LOCK | SPINDEL | KARA | BROSA |
| LOGO | GRAFISK FRAMSTÄLLNING | GRAAFINEN | GRAFIC |
| LOOM | KABELHÄRVA | KEILA | FASCICUL |
| LOWER BOX CABLING | KABLAGE SKÅP PÅ PLATTFORM | TORNIN KORIN KAAPELOINTI | CABLARE COFRET TURELA |
| LOWER PANEL | NEDRE PANEL | ALAOHJAUSPÖYTÄ | PUPITRU MIC |
| LUG | KABELSKOR | LIITIN | LAMA DE RACORD, PAPUC DE CABLU, URECHE |
| MAINTENANCE LOG | UNDERHÅLLSPROTOKOLL | HUOLTOVIHKO | CARNET DE ÎNTRETINERE |
| MALE CONNECTOR | | | |
| MALE EVEN BEND | KNÄRÖR AV HANTYP | UROSTAIVE | COT INEGAL |
| MALE UNION | ANSLUTNING AV HANTYP | UROSLIITOS | LEGATURA |
| MANIFOLD | UPPSAMLARE | KERÄÄJÄ | |
| MANUFACTURER PLATE | TILLVERKARSKYLT | RAKENNUSLEVY | PLACA DE BAZA/ CONSTRUCTOARE |
| MAST FOOT | SVÄNGKRANSFOT | MASTON JALUSTA | PICIOR DE MAT |
| METAL FRAME PROFILE | PROFIL MED METALLSTOMME | METALLIVAHVISTUKSEN PROFIILI | |
| MODULE | REGLERSTÅNGSKOLV | MODUULI | MODUL |
| MOULDED COUNTERWEIGHT | MOTVIKT, GJUTGODS | MUOTITETTU VASTAPAINO | CONTRAGREUTATE AJUSTATA |
| NUT | MUTTER | MUTTERI | PIULITA |
| O-RING | O-RING | O-RENGASTIIVISTE | MANSETA DE ROTATIE |
| OIL LEVEL | OLJENIVÅ | ÖLJYNPINNAN KORKEUS | NIVEL DE ULEI |
| ON/OFF | ON/OFF | PÄÄLLÄ/POIS | PORNIT / OPRIT |
| ON/OFF MOVEMENTS BLOCK | RÖRELSEBLOCK ALLT ELLER INGENTING | KAIKKI TAI EI MITÄÄN LOHKO | BLOC MISCARE TOTUL SAU NIMIC |
| ONE-WAY VALVE | BAKSLAGSVENTIL | PALAUTUKSENESTOLÄPPÄ | CLAPETA ANTI - RETUR |
| OPERATING MANUAL | TILLVAL UTFORMNING | Käyttöopas | |
| OPERATOR MANUAL | PLATTFORM MED ROTATION VÄGNING | KÄSIKIRJA CE | MANUAL CE |
| OPERATOR MANUAL | ANVÄNDARHANDBOK | KÄYTTÄJÄN OHJEKIRJA (OPERATOR'S MANUAL) | |
| OPTION | TILLVAL | VAIHTOEHTO | OPTIUNE |
| OPTION | TILLVAL | VAIHTOEHTO | OPTIUNE |

| English | Svenska | Suomi | Românà |
|---|---|---|---|
| OSCILLATING CASE | SVÄNGCHASSI | EPÄVAKAISUUS | |
| OWNER'S MANUAL | ÄGARENS MANUAL | OMISTAJAN OHJEKIRJA | GHIDUL UTILIZATORULUI |
| PENDULAR ARM | SVÄNGARM | VÄRÄHTELEVÄ PUOMI | BRAT PENDULAR |
| PIN | HYLSA | HOLKKI | DULIE, SOCLU |
| PIN | SPRINT | SOKKA | OPRITOR |
| PIN- PULLEY | BRYTRULLSAXEL | HIHNAPYÖRÄN AKSELI | AX DE FULIE |
| PIN- TIE ROD | DRAGBULTSAXEL | VETOAKSELI | AX TIRANT |
| PLASTIC PROTECTION DEVICE | PLASTSKYDD | MUOVISUOJUS | PROTECTIE PLASTIC |
| PLASTIC SPIRAL HOSE | FLEXIBEL PLASTSPIRAL | JOUSTAVA MUOVISPIRAALI | SPIRALA PLASTIC SUBTIRE |
| PLATE | PLATTA | ALUSLEVY | PLATINA CI COMPLET |
| PLATFORM + JIB | KORG + PENDELAXEL | KORI + HEILURIVARSI | NACELA + PENDULAR |
| PLUG | PLUGG | TULPPA | DOP, CAPAC INSURUBAT, BUSON |
| PLUG | STICKKONTAKT | PISTOKE | FISA |
| PLUG CONTACT | HANKONTAKT | Uroskytkentä | |
| PLUG SOCKET | ETIKETT "240V UTTAG" | ETIKETTI "PISTOKE 240V" | ETICHETA "PRIZA 240V" |
| PLUG SOCKET | UTTAG | OTTO | PRIZA |
| PORTUGAL LABELS | PORTUGISISKA DEKALER | ETIKETIT PORTUGAL | ETICHETE PORTUGALIA |
| POSITION SWITCH | LÄGESBRYTARE | ASEMOINTIKYTKIN | INTRERUPATOR DE POZITIE |
| POTENTIOMETER | POTENTIOMETER | POTENTIOMETRI | POTENTIOMETRU |
| POWER SUPPLY LIFTING DEVICE OPTION | TILLVAL FÖRS. I KORGEN | VAIHTOEHTONA MOOTTORIYKSIKKÖSYÖTTÖ | |
| POWER SUPPLY SECTION | ELSYSTEM | SÄHKÖKOKONAISUUS | |
| PRESSURE FILTER | TRYCKFILTER | PAINESUODATIN | FILTRE DE PRESIUNE |
| PRESSURISED LIQUID LABEL | DEKAL "VÄTSKA UNDER TRYCK" | ETIKETTI PAINEENALAINEN NESTE | ETICHETA FLUID SUB PRESIUNE |
| PRINTED CIRCUIT | TRYCKT KRETS | PAINOPIIRI | CIRCUIT IMPRIMAT |
| PROTECTION | SKYDD | SUOJA | PROTECTIE |
| PROTECTIVE CAP | SKYDDSPLUGG | SUOJATULPPA | |
| PROTECTIVE HOOD | SKYDDSKÅPA | NAISEN LAKKI JOKSEENKIN LUONNONSUOJELU | |
| PROTECTIVE PLATE | SKYDDSPLÅT | ARKKI RAUTA JOKSEENKIN LUONNONSUOJELU | |
| PULLEY | REMSKIVA | KISKAISTA | |
| PUMP | PUMP | PUMPPU | POMPA |

| English | Svenska | Suomi | Românà |
|---|---|---|---|
| PUSH BUTTON | TRYCKKNAPP | PAINONAPPI | BUTON DE PRESARE/ ACTIONARE |
| RAIL | LEDSTÅNG | KAIDE | LONJERON |
| RAPID FASTENER | SNABBKOPPLING | PIKALIITIN | |
| RECEPTACLE | BEHÅLLARE | ASTIA | LACAS |
| RED ARROW | RÖD PIL | PUNAINEN NUOLI | SAGEATA ROSIE |
| RED LIGHT INDICATOR | RÖD KONTROLLAMPA | MERKKIVALO PUNAINEN | BEC DE SEMNALIZARE ROSU |
| RELAY | RELÄ | RELE | RELEU |
| RELIEF VALVE | | | |
| RETAINER WASHER | SPÄRRBRICKA | PIDÄTYSLAATTA | PLACA DE ANCORAJ |
| RIDGED CONICAL WASHER | KONISK RÄFFLAD RONDELL | RIHLATTUKARTIORENGAS | |
| RIGHT HOOD | HUV HÖGER | OIKEA KANSI | CAPOTA DREAPTA |
| RIM | FÄLG | VANNE | JANTA |
| RING- RUBBER | KLUVEN KONISK BUSSNING | JOUSTORENGAS | INEL ELASTIC |
| ROTOR | ROTOR | ROOTTORI | |
| RUBBER SEAL | GUMMIPACKNING | KUMITIIVISTE | GARNITURA DE CAUCIUC |
| SAFETY SEAL PLUG | LOCK | KORKKI | |
| SCRAPER SEAL | PACKNING SKRAPVERKTYG | ÖLJYTIIVISTERENGAS | |
| SCREW | SKRUV | RUUVI | SURUB |
| SEAL | PACKNING | TIIVISTE | GARNITURA |
| SEAL KIT | PÅSE MED PACKNINGAR | TIIVISTEKOTELO | LOCAS DE GARNITURI |
| SEALING RING | TÄTNINGSLIST | TIIVIS LIITOS | MANSETA DE ETANSARE |
| SELF-LOCKED NUT | SJÄLVLÅSANDE MUTTER | ITSEJARRUTTAVA MUTTERI | PIULITA CU AUTOFRINARE |
| SENSOR SUPPORT | STÖDFÅNGARE | ANTURITUKI | |
| SERIAL BOARD | SERIEKORT | SARJAKORTTI | HARTA SERIAL |
| SHAFT SEAL | AXELPACKNING | AKSELIN TIIVISTE | |
| SHAFT- OUTPUT | UTGÅENDE AXEL | ULOSTULOAKSELI | ARBORE DE IESIRE |
| SHEET METAL SUPPORT | STÖDPLÅT | TUKILEVY | |
| SHUNT | SHUNT | RINNAKKAISKYTKENTÄ | SUNT |
| SINGLE-AXIS JOYSTICK | BRYTARE | KYTKIN 1 AKSELI | MANIPULATOR 1 AXA |
| SLEEVE | SKARVMUFF | HOLKKI | MANSON |
| SLEW BEARING | ORIENT. KRONENHET | OHJAUSHAMMASPYORÄ | |
| SLEW RING | RIKTNINGSKRANS | SUUNTAUKSEN HAMMASKEHÄ | COROANA DE ORIENTARE |
| SLOPE SENSOR | LUTNINGSDETEKTOR | KALTEVUUSANTURI | DETECTOR DE DEVERSARE |
| SLOTTED SCREW | KLUVEN SKRUV | HALKAISTU RUUVI | |
| SOCKET CONTACT | HONKONTAKT | Naaraskytkentä | |

| English | Svenska | Suomi | Românà |
|---|---|---|---|
| SOLENOID VALVE | MAGNETVENTIL | SÄHKÖVENTTIILI | ELECTRO-VALVA |
| SPACER | MELLANLÄGG | VÄLITUKI | ANTRETUAZA |
| SPAIN LABELS | SPANSKA DEKALER | ETIKETIT ESPANJA | ETICHETE SPANIA |
| SPARE PARTS MANUAL | RESERVDELSKATALOG | LUETTELO PR | CATALOG |
| SPLIT PIN | SAXPINNE | HALKAISTU KIILA | SPLINT |
| SPRING | FJÄDER | UJOUSI | RESORT-ARC |
| STEERING CYLINDER | STYRNINGSDOMKRAFT | OHJAUSSYLINTERI | CRIC DE DIRECTIE |
| STUD | GÄNGTAPP | TAPPI | TIRANT, SURUB CU FILET LA AMBELE CAPETE |
| SUB-FRAME | CHASSI | RUNKO | |
| SUPPLY | MATNING | SYÖTTÖ | ALIMENTARE |
| SUPPORT LUG | FÄSTSTAG | KIINNITYSLEVY | MASA SUPORT COMANDA DE PRIM AJUTOR |
| SWITCH BOX | OMKOPPLARE | KYTKIN | COMUTATOR |
| Temperature sensor | TEMPERATURGIVARE | LÄMPÖTILA-ANTURI | |
| TERMINAL BLOCK | ANSLUTNINGSPLINT | RIVILIITINKOTELO | LIMITATOR |
| TERMINAL PARTITION BLOCK | SLUTVÄGGSBLOCK | VÄLISEINÄLOHKO PÄÄTE | BLOC ÎNCHIDERE TERMINALA |
| THRUST WASHER | TRYCKBRICKA | RAJOITINLAATTA | INEL OPRITOR/LIMITATOR |
| THUMB WHEEL | POLSK | SÄÄTÖKEHRÄ | |
| TIE ROD | DRAGBULT | TANKO | TIRANT |
| TIGHTENING COLLAR | SLANGKLÄMMA | LETKUNKIRISTIN | COLIER DE STRINGERE |
| TIRE | DÄCK | RENGAS | PNEU |
| TRACTION BATTERY ASSEMBLY | DRAGKRAFTSBATTERIENHET | SIIRTOAKKUJÄRJESTELMÄ | ANSAMBLU BATERIE TRACTIUNE |
| TRACTION BATTERY OPTION | TILLVAL: DRIVBATTERI | Akkukäyttöinen vaihtoehto | |
| TURN KNOB HEAD | HUVUD PÅ VRIDKNAPP | PYÖRÖNAPIN PÄÄ | CAP DE BUTON ROTATIV |
| TURNTABLE CONTROL BOX | DEKAL MANÖVERPANEL PÅ PLATTFORM | TARRA RUNGON OHJAUSPÖYTÄ | ETICHETA PUPITRU TURELA |
| TURNTABLE ELECTRICITY | ELEKTRICITET CHASSI | ALAVAUNUN SÄHKÖ | ELECTRICITATE TURELA |
| TURRET UNIT | SVÄNGSKIVEAGGREGAT | TORNIRYHMÄ | |
| UPPER CONTROL BOX | ÖVRE PANEL | YLÄOHJAUSPÖYTÄ | PUPITRU INALT |
| UPPER CONTROL BOX | MANÖVERPANEL KORG | MOOTTORIVAUNUKORIN OHJAUSPÖYTÄ | PUPITRU NACELA |
| USA OPTION | TILLVAL FÖR USA | USA-OPTIO | |
| USER MANUAL | TILLVAL KROK | KÄYTTÄJÄN KÄSIKIRJA | |
| WASHER | BRICKA | LAATTA | RONDELA SAIBA INEL |

| English | Svenska | Suomi | Românà |
|---|---|---|---|
| WATER PROOF BATTERY CHARGER | LADDARE AV TÄTT BATTERI | TIIVIIN PARISTON LATAAJA | INCARCATOR DE BATERIE ETANS |
| WATER PROOF BATTERY CHARGER | LADDARE AV TÄTT BATTERI | TIIVIIN PARISTON LATAAJA | INCARCATOR DE BATERIE ETANS |
| WEARING (OF) SAFETY HARNESS | HARNESKPORT | VALJASTUKI | |
| WHEEL HUB | HJULNAV | PYÖRÄN NAPA | BUTUCUL ROTII |
| WINDER | SPÄNNRULLE | KOKOOJA | INFUSARATOARE |
| WIRE | TRÅD | LANKA | FIR |
| | | | |
| | | | |
| | | | |
| | | | |
| | | | |
| | | | |
| | | | |
| | | | |
| | | | |
| | | | |
| | | | |
| | | | |
| | | | |
| | | | |
| | | | |
| | | | |
| | | | |
| | | | |
| | | | |
| | | | |
| | | | |
| | | | |
| | | | |
| | | | |
| | | | |
| | | | |
| | | | |

| English | Svenska | Suomi | Românà |
| --- | --- | --- | --- |
| | | | |