# HA16 SPX

242 032 7510 - E12.05

| | | | | | |
|---|---|---|---|---|---|
| | F | Pièces de rechange | | I | Pezzi di ricambio |
| | GB | Spare parts | | P | Peças sobressalentes |
| | D | Ersatzteile | | S | Reservdel |
| | NL | Onderdelen | | SF | Varaosa |
| | DK | Reservedele | | USA | Spare parts |
| | E | Piezas de repuesto | | CAN | Spare parts |

CE

WWW.HAULOTTE.COM

Haulotte GROUP

Pinguely-Haulotte - La Péronnière - BP 9 - 42152 l'Horme - France - Tel : +33 (0)4 77 29 24 24 - Fax : +33 (0)4 77 29 43 95 - email : haulotte@haulotte.com

**Distribué par / *Distributed by/ Distribuito da***

**Haulotte France**
Tél / *Phone* +33 (0)4 72 88 05 70
Fax / *Fax* +33 (0)4 72 88 01 43

**Centre Mondial Pièces de Rechange**
***Spare Parts International Centre***
**Tél / *Phone* +33 (0)4 77 29 24 51**
Fax / *Fax* +33 (0)4 77 29 98 88

**Haulotte Hubarbeitsbühnen**
Tél / *Phone* + 49 76 33 806 920
Fax / *Fax* + 49 76 33 806 82 18

**Haulotte Portugal**
Tél / *Phone* + 351 21 955 98 10
Fax / *Fax* + 351 21 995 98 19

**Haulotte UK**
Tél / *Phone* + 44 (0) 1952 292753
Fax / *Fax²* + 44 (0) 1952 292758

**Haulotte U.S. Inc.**
Main tool free 1-877-HAULOTTE
Service tool free *1*-877-HAULOT-S

**Haulotte Asia**
Tél / *Phone* + 65 6536 3989
Fax / *Fax* + 65 6536 3969

**Haulotte Netherlands BV**
Tél / *Phone* + 31 162 670 707
Fax / *Fax* + 31 162 670 710

**Haulotte Australia PTY Ltd**
Tél / *Phone* + 61 3 9706 6787
Fax / *Fax* + 61 3 9706 6797

**Haulotte Italia**
Tél / *Phone* + 39 05 17 80 813
Fax / *Fax* + 39 05 16 05 33 28

**Haulotte Do Brazil**
Tél / *Phone* + 55 11 3026 9177
Fax / *Fax* + 55 3026 9178

**Haulotte Scandinavia AB u.b.**
Tél / *Phone* + 46 31 744 32 90
Fax / *Fax* + 46 31 744 32 99

**Haulotte Iberica - Madrid**
Tél / *Phone* + 34 91 656 97 77
Fax / *Fax* + 34 91 656 97 81

**Haulotte Iberica - Sevilla**
Tél / *Phone* + 34 95 493 44 75
Fax / *Fax* + 34 95 463 69 44

# *Pourquoi n'utiliser que des pièces de rechange d'origine Haulotte ?*

## 1. REMISE EN CAUSE DE LA DECLARATION DE CONFORMITE CE

Les remplacements ou modifications de composants autres que ceux recommandés par **Pinguely-Haulotte**, peuvent remettre en cause les conditions initiales de la sécurité de notre matériel **Haulotte**.
Toute opération de ce type sur notre matériel **Haulotte** sera à la charge entière de celui qui sera intervenu et remettra en cause la validité du marquage CE délivré par **Pinguely-Haulotte**. La déclaration CE de conformité devient caduque et **Pinguely-Haulotte** dégage sa responsabilité réglementaire.

## 2. ARRET DE LA GARANTIE

La garantie contractuelle offerte par **Pinguely-Haulotte** sur ses équipements **Haulotte** n'est plus opposable à **Pinguely-Haulotte** dès que vous utilisez des pièces de rechange autres que les pièces d'origine.

## 3. RESPONSABILITE CIVILE ET PENALE

La contrefaçon et la concurrence déloyale de pièces sont condamnées par la loi civile et pénale.
La contrefaçon engage la responsabilité civile et pénale du fabricant, du revendeur, voir dans certains cas de l'utilisateur des pièces de contrefaçon.
La concurrence déloyale engage la responsabilité civile du fabricant du revendeur d'une « copie servile » qui tirant de cette opération un avantage injustifié, fausse, les règles normales de la concurrence et réalise un acte de « parasitisme » en détournant les efforts de conception, de mise au point, de recherche de la meilleure adéquation, et le savoir faire de **Pinguely-Haulotte**.

**POURQUOI PRENDRE DES RISQUES INUTILES ?**

**POUR VOTRE SECURITE , EXIGEZ DES PIECES D' ORIGINE HAULOTTE**

## 4. QUALITE

L'utilisation de pièces d'origines **Pinguely-Haulotte** c'est l'assurance :

- D'un contrôle qualité performant
- Des dernières évolutions technologiques
- D'une parfaite sécurité
- De meilleures performances
- D'une meilleure durée de vie de votre équipement **Haulotte**
- De la garantie **Pinguely-Haulotte**
- Du support technique de nos techniciens et agents réparateurs

## 5. DISPONIBILITE

Utiliser des pièces d'origine **Pinguely-Haulotte**, c'est profiter de la disponibilité de 40 000 références en stock permanent et d'un taux de service de 98%.

**POURQUOI NE PAS EN PROFITER ?**

# *Why use only Haulotte original spare-parts ?*

## 1. RECALLING THE EEC DECLARATION OF CONFORMITY IN QUESTION

Components, substitutions, or modifications other than the ones recommended by **Pinguely-Haulotte** may recall in question the initial security conditions of our **Haulotte** equipment. The person who would have intervened for any operation of this kind will take responsibility and recall in question the EEC marking validity granted by **Pinguely-Haulotte**. The EEC declaration will become null and void and **Pinguely-Haulotte** will disclaim regulation responsibility.

## 2. END OF THE WARRANTY

The contractual warranty offered by **Pinguely-Haulotte** for its equipment will no longer be applied after spare-parts other than original ones are used.

## 3. PUBLIC AND PENAL LIABILITY

The manufacture and unfair competition of fake spare-parts will be sentenced by public and penal law. The usage of fake spare-parts will invoke the civil and penal liability of the manufacturer, of the retailer, and, in some cases, of the person who used the fake spare-parts.
Unfair competition invokes the civil liability of the manufacturer and the retailer of a “slavish copy” which, taking unjustified advantage of this operation, distorts the normal rules of competition and creates a “parasitism” act by diverting efforts of design, perfection, research of best suitability, and the know-how of **Pinguely-Haulotte**.

**FOR YOUR SECURITY, REQUIRE HAULOTTE ORIGINAL SPARE-PARTS**

## 4. QUALITY

Using **Pinguely-Haulotte** original spare-parts means guarantee of :

- Efficient quality control
- The last technological evolution
- Perfect security
- Best performance
- The best useful life of your **Haulotte** equipment
- The **Pinguely-Haulotte** warranty
- Our technicians' and repair agents' technical support

## 5. AVAILABILITY

Using Haulotte original spare-parts means taking advantage of 40 000 references available in our permanent stock and a 98% service rate.

**WHY NOT TAKE ADVANTAGE ?**

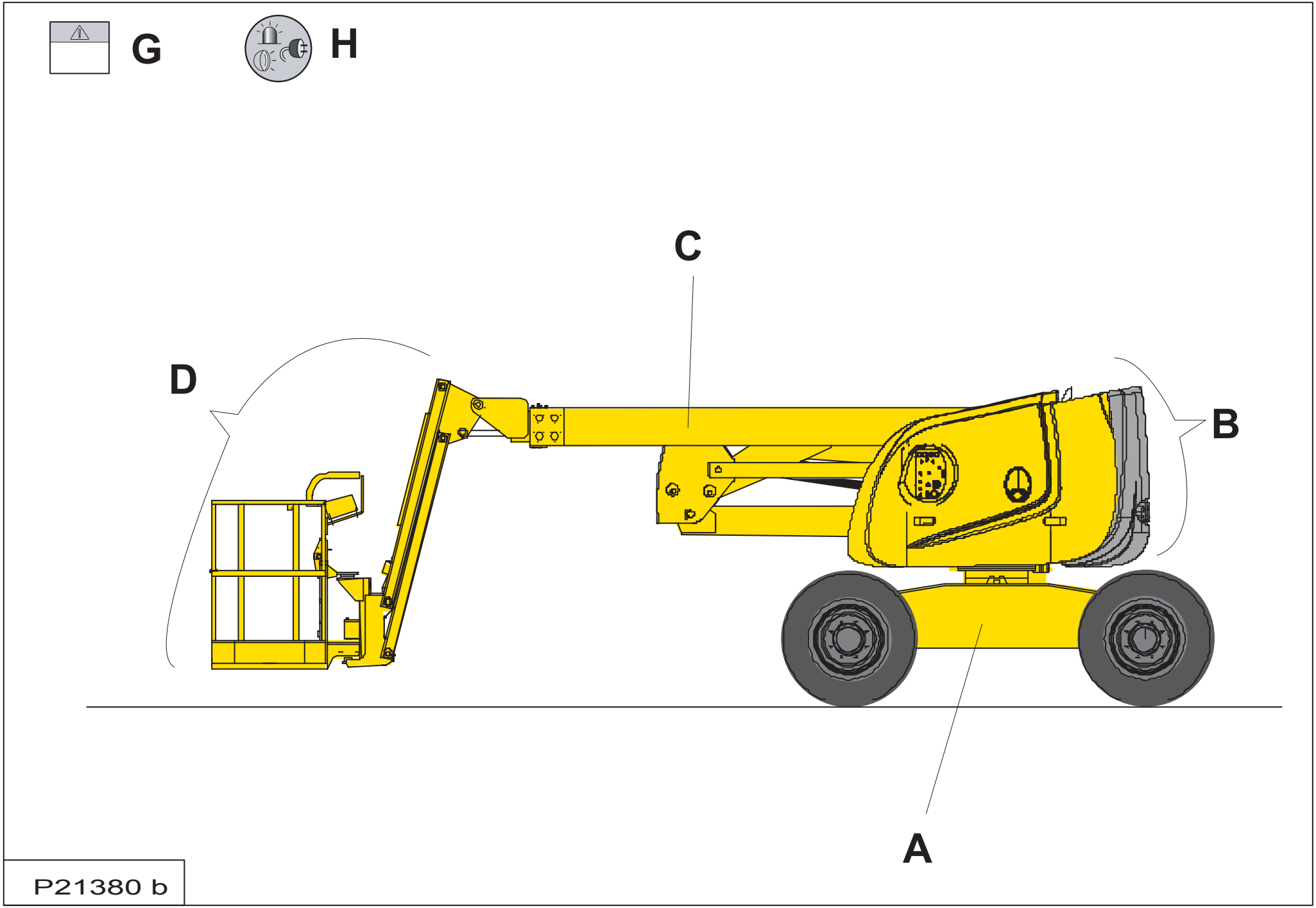


P21380 b

# ▲ Groupes Machine / Machine groups — HA16 SPX

| Rep. | Désignation | Designation |
|---|---|---|
| A | PARTIE BASSE | BOTTOM PART |
| B | TOURELLE | TURRET |
| C | FLÈCHE | BOOM |
| D | NACELLE + PENDULAIRE | PLATFORM + JIB |
| G | ETIQUETTES | LABELS |
| H | OPTIONS | OPTION |
| | | |
| | | |
| | | |
| | | |
| | | |
| | | |
| | | |
| | | |
| | | |
| | | |
| | | |
| | | |
| | | |
| | | |
| | | |
| | | |
| | | |
| | | |
| | | |
| | | |
| | | |

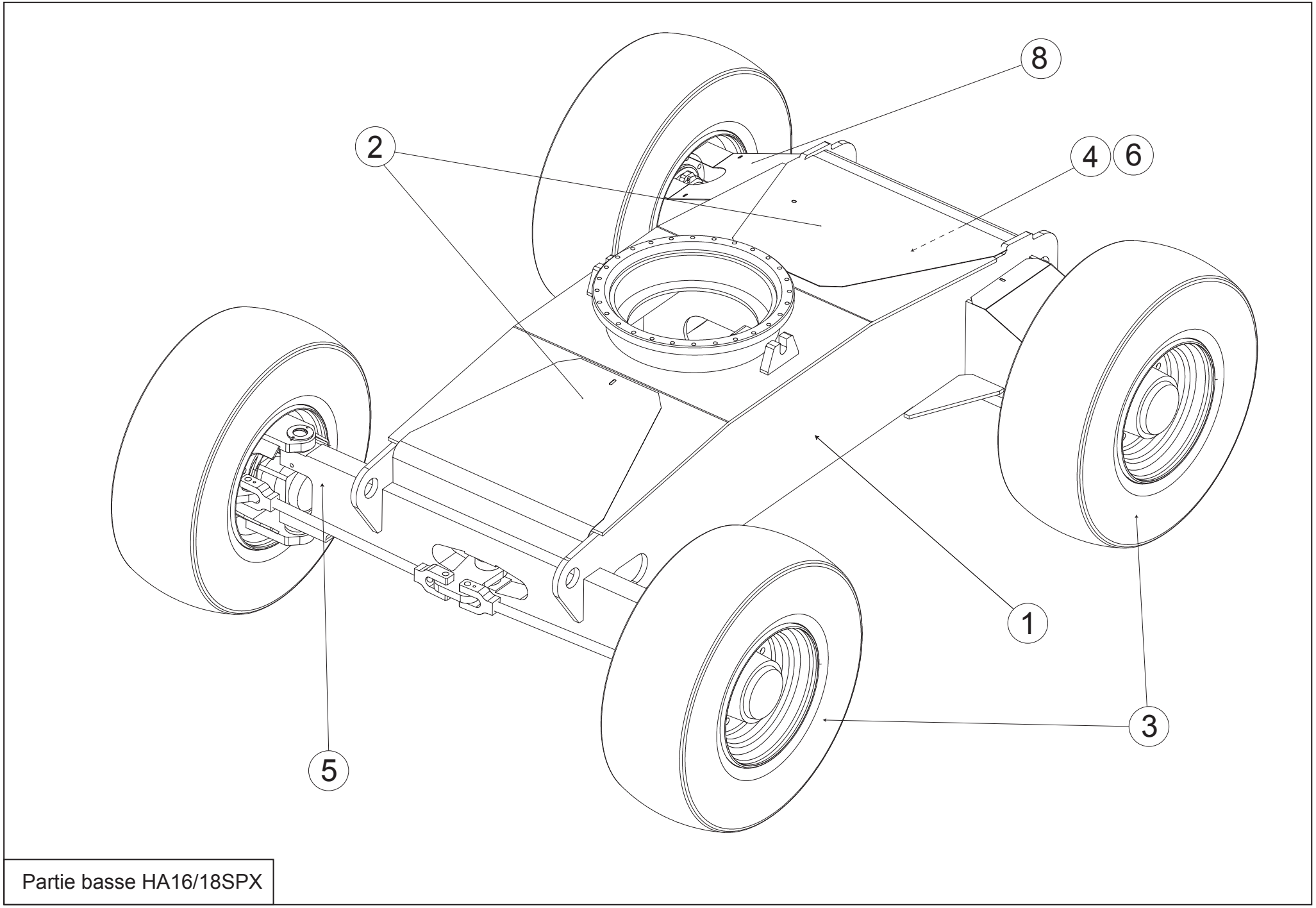


Partie basse HA16/18SPX

# ▲ PARTIE BASSE
# BOTTOM PART

◀ A ▶

| Rep. | Désignation | Designation | Specification | Up to / jusqu'à |
|---|---|---|---|---|
| 1 | CHASSIS PARTIE BASSE | LOWER PART CHASSIS | | |
| 2 | CAPOTAGE CHÂSSIS | FRAME COWLING | | |
| 3 | ROUES | WHEELS | | |
| 4 | HYDRAULIQUE CHÂSSIS | CHASSIS HYDRAULICS | | |
| 5 | ESSIEU MOTO-DIRECTEUR | MOTOR GUIDING AXLE | | |
| 6 | ESSIEU MOTEUR | DRIVING AXLE-(TREE) | | |
| | | | | |
| | | | | |
| | | | | |
| | | | | |
| | | | | |
| | | | | |
| | | | | |
| | | | | |
| | | | | |
| | | | | |
| | | | | |
| | | | | |
| | | | | |
| | | | | |
| | | | | |
| | | | | |
| | | | | |
| | | | | |
| | | | | |
| | | | | |

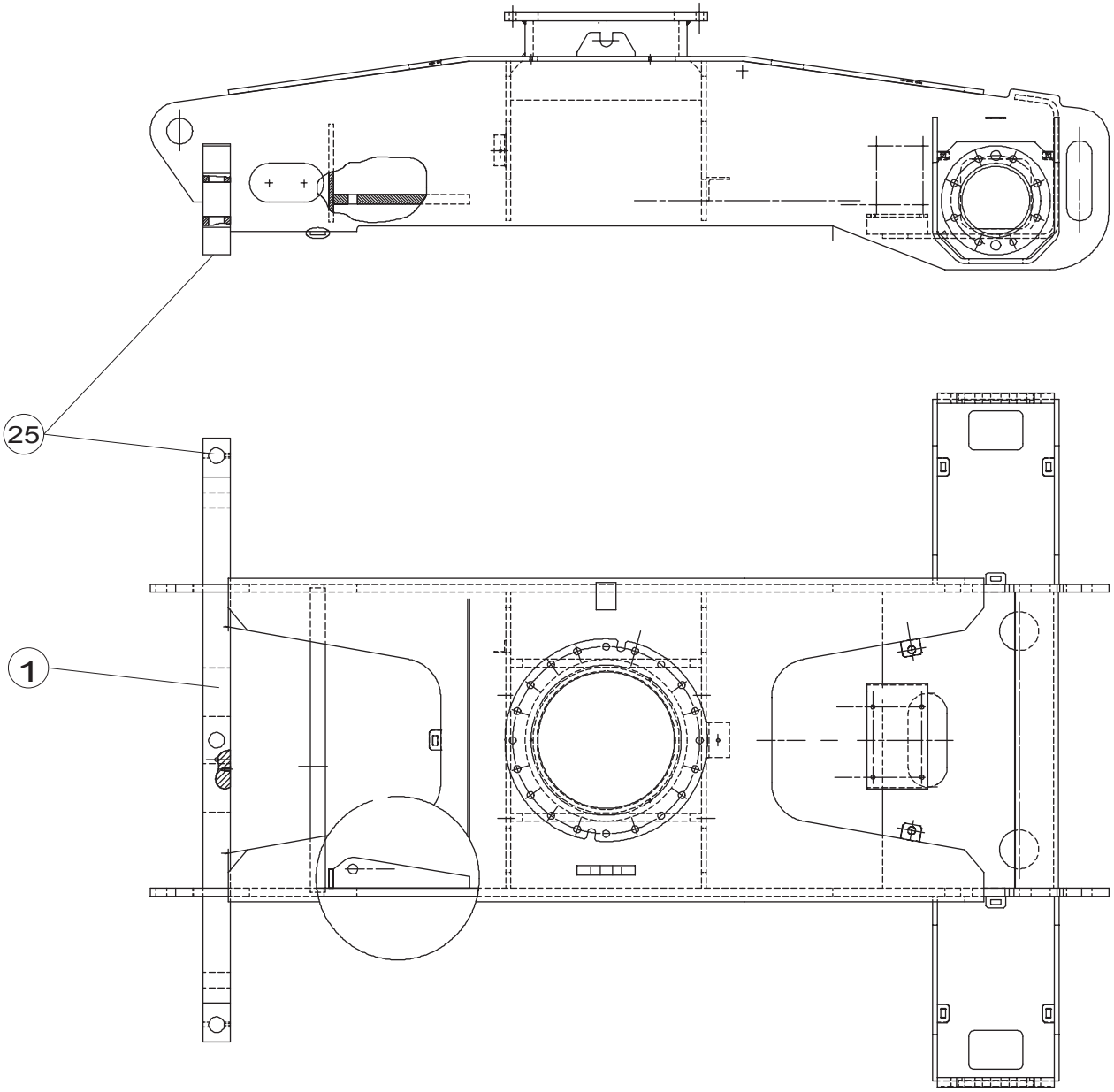


P21077 a

# ▲ CHASSIS PARTIE BASSE
# LOWER PART CHASSIS

◀ A1 ▶

| Rep. | Désignation | Designation | Specification | Qty | Code | Up to / jusqu'à |
|---|---|---|---|---|---|---|
| 1 | CHASSIS PARTIE BASSE | LOWER PART CHASSIS | | 1 | 180P210770 | |
| *25* | *DEMI-AXE DE PIVOT* | *1/2 PIVOTING AXIS* | | *4* | *137P203390* | |

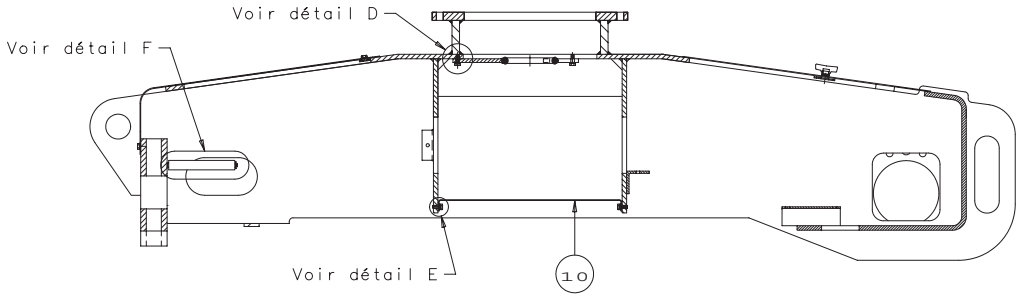


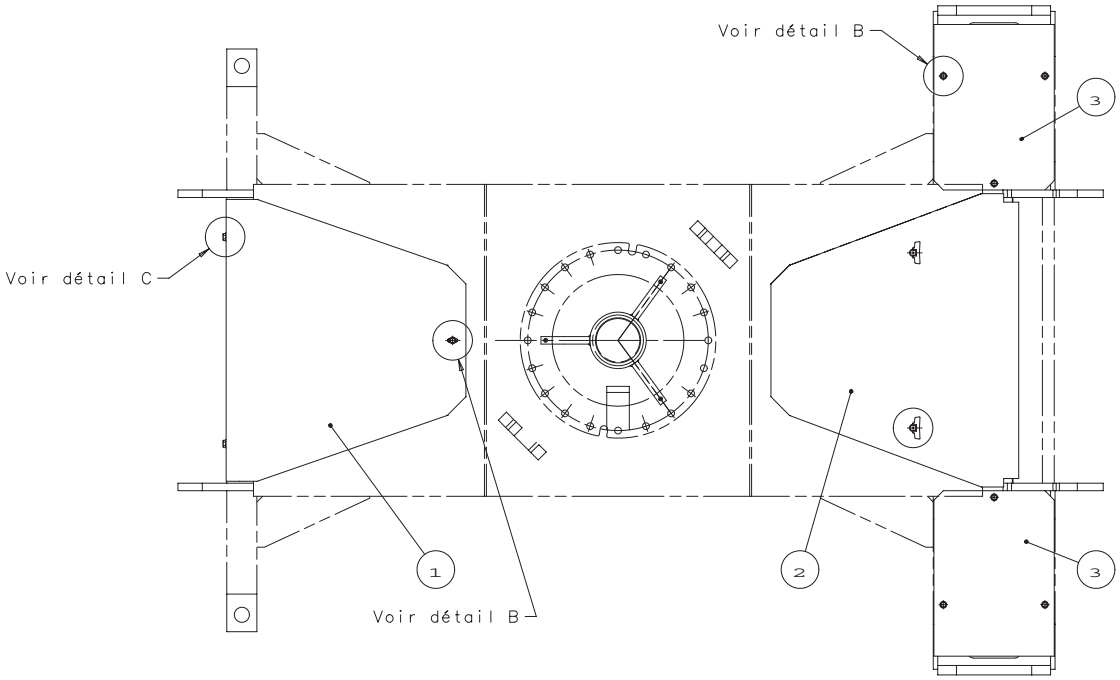


Détail A
Echelle 1/2

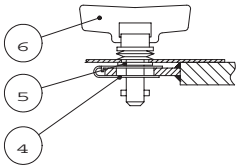


Détail B
Echelle 1/2

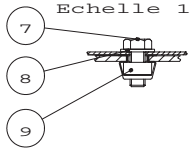


Détail C
Echelle 1/2

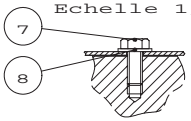


Détail D
Echelle 1/2

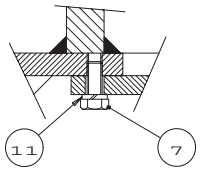


Détail E
Echelle 1/2

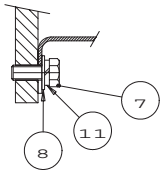


Détail F
Echelle 1/2

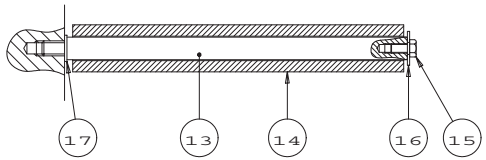


P20016

# ▲ CAPOTAGE CHÂSSIS
# FRAME COWLING

◀ A2 ▶

| Rep. | Désignation | Designation | Specification | Qty | Code | Up to / jusqu'à |
|---|---|---|---|---|---|---|
| 1 | CAPOT AV | FRONT HOOD | | 1 | 152B160350 | |
| 2 | CAPOT AR | REAR HOOD | | 1 | 152C157420 | |
| 3 | CAPOT SUR ESSIEU MOTEUR | MOTOR AXLE COVER | | 2 | 152B160340 | |
| 4 | RÉCEPTACLE À CLIPPER | CLIP RECEPTACLE | | 2 | 2421805020 | |
| 5 | RONDELLE DE RETENUE | RETAINER | 991W04 | 2 | 2351302140 | |
| 6 | FIXATION | ATTACHMENT DEVICE | 1/4 DE TOUR A OREILLE | 2 | 2421602790 | |
| 7 | VIS | SCREW | H M8X20-20 CL.8.8 ZB | 13 | 2331231420 | |
| 8 | RONDELLE PLATE | FLAT WASHER | M 8 ZB | 13 | 2351112070 | |
| 9 | ECROU CAGE | CAGED NUT | M8 ZB | 7 | 2349223070 | |
| 10 | TÔLE PROTECTION | PROTECTIVE PLATE | | 1 | 180P214280 | |
| 11 | RONDELLE ÉLASTIQUE | RUBBER WASHER | W 8 ZB | 4 | 2351201070 | |
| 13 | SUPPORT GUIDAGE FLEXIBLE | FLEXIBLE GUIDE SUPPORT | | 1 | 178C163330 | |
| 14 | ROULEAU | ROLLER | ROULEAU POUR FLEXI- | 1 | 116D149001 | |
| 15 | VIS | SCREW | H M5X10-10 CL.8.8 ZB | 1 | 2331231200 | |
| 16 | RONDELLE PLATE | FLAT WASHER | LL 6 ZB | 1 | 2351124050 | |
| 17 | RONDELLE À DENTS | TOOTH LOCK WASHER | DEC 8 ZB | 1 | 2351301090 | |
| | | | | | | |
| | | | | | | |
| | | | | | | |
| | | | | | | |
| | | | | | | |
| | | | | | | |
| | | | | | | |
| | | | | | | |
| | | | | | | |
| | | | | | | |

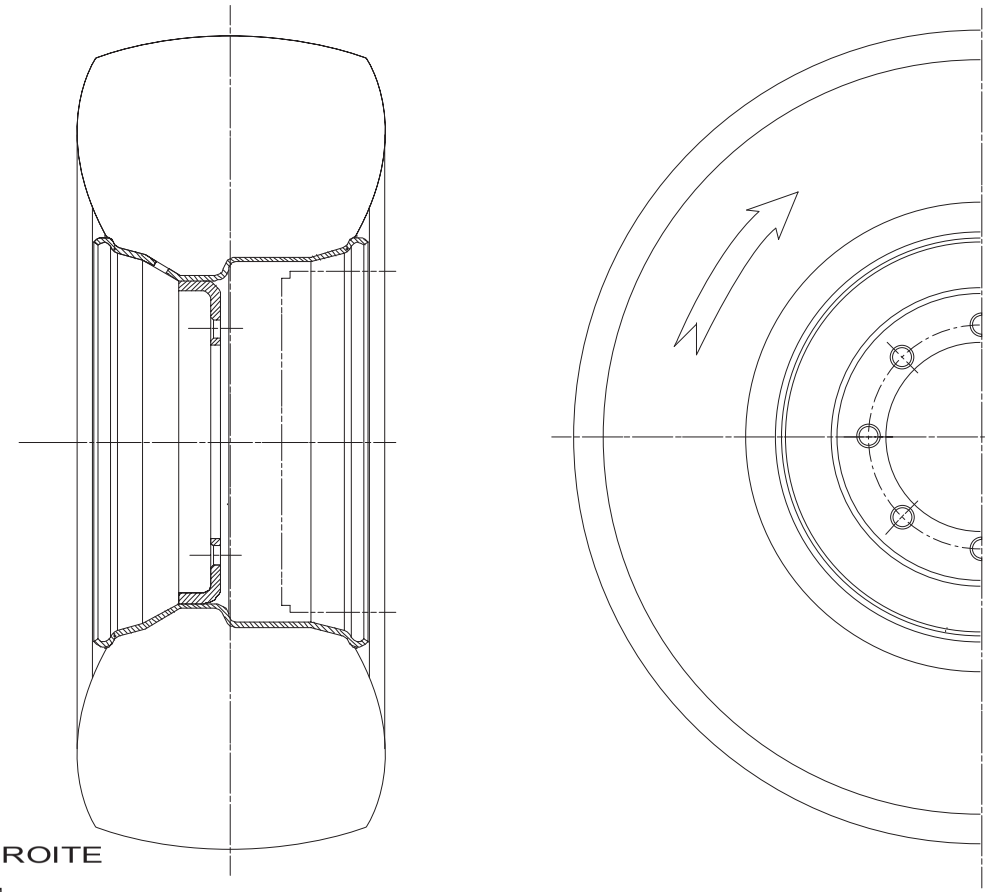

1 ROUE DROITE

B15996

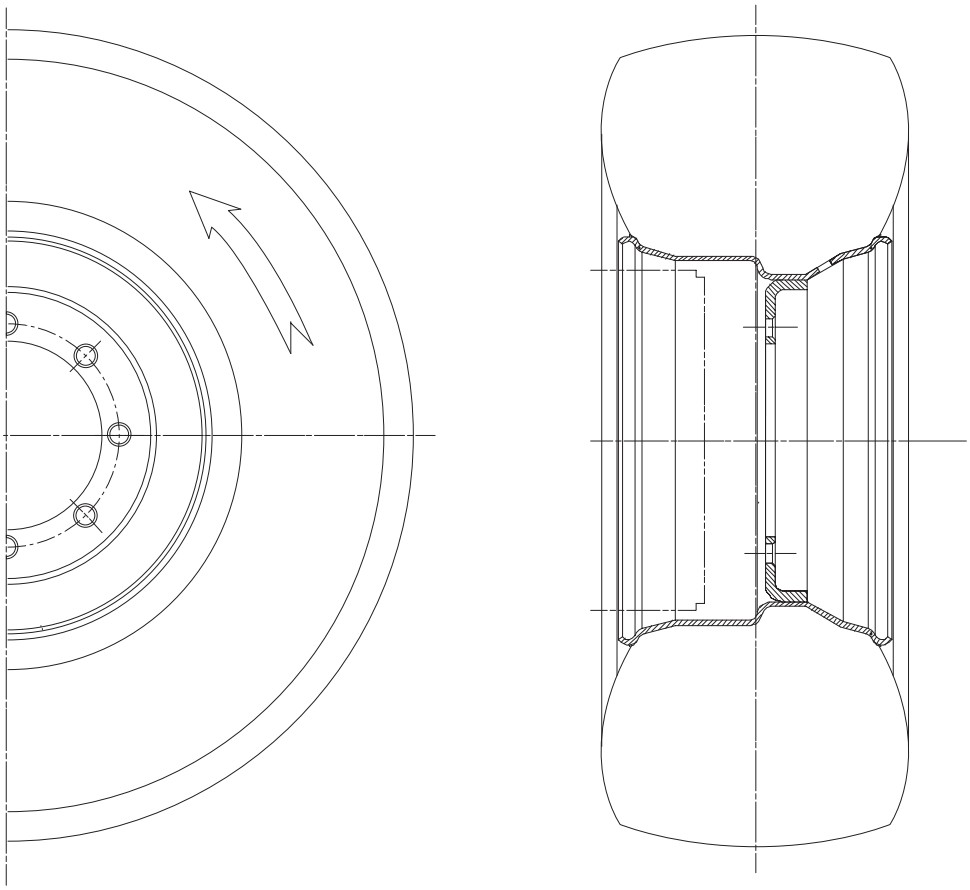

2 ROUE GAUCHE

B16052

# ROUES
# WHEELS

◀ A3 ▶

| Rep. | Désignation | Designation | Specification | Qty | Code | Up to / jusqu'à |
|---|---|---|---|---|---|---|
| 1 | ROUES | WHEELS | DROITES - S6013 | 1 | 2326000290 | |
| 2 | ROUES | WHEELS | GAUCHES - S6014 | 1 | 2326000300 | |

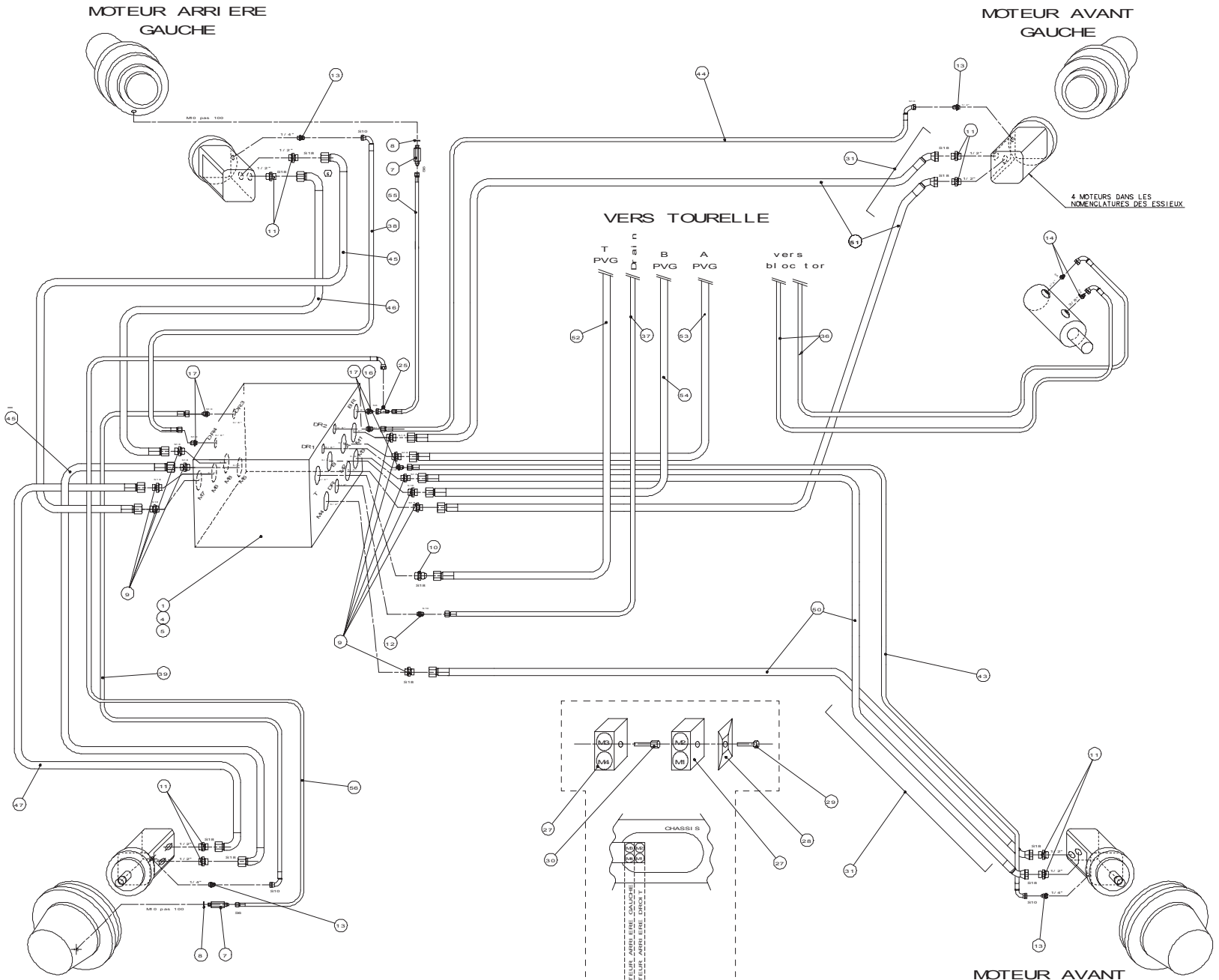
MOTEUR ARRIERE GAUCHE
MOTEUR AVANT GAUCHE
VERS TOURELLE
T PVG
Drain
B PVG
A PVG
vers blocTor
4 MOTEURS DANS LES NOMENCLATURES DES ESSIEUX
CHASSIS
MOTEUR ARRIERE GAUCHE
MOTEUR ARRIERE DROIT
MOTEUR ARRIERE DROIT
MOTEUR AVANT DROIT

P21106 c

# HYDRAULIQUE CHÂSSIS
# CHASSIS HYDRAULICS



| Rep. | Désignation | Designation | Specification | Qty | Code | Up to / jusqu'à |
|---|---|---|---|---|---|---|
| 1 | BLOC HYDRAULIQUE 4X4 | 4WD HYDRAULIC BLOCK | S6062 | 1 | 2503000510 | |
| 4 | VIS | SCREW | H M10X25-25 CL.8.8 ZB | 4 | 2331231560 | |
| 5 | RONDELLE À DENTS | TOOTH LOCK WASHER | DEC 10 ZB | 4 | 2351301110 | |
| 7 | RACCORD MÂLE | MALE CONNECTION | | 2 | 178C141860 | |
| 8 | JOINT CUIVRE | COPPER SEAL | Ø10,1X15,7X25 | 2 | 2399002130 | |
| 9 | UNION MÂLE | MALE UNION PIECE | 3/4' BSPP 1'3/16-12 | 10 | 2501000010 | |
| 10 | UNION | UNION PIECE | M.JIC 37 (18)M 3/4 BSPP | 1 | 2369117210 | |
| 11 | UNION MÂLE ORFS | MALE UNION PIECE ORFS | | 8 | 2501000830 | |
| 12 | UNION | UNION PIECE | JIC 37 BS | 1 | 2369117370 | |
| 13 | UNION | UNION PIECE | M.JIC 37 (10)M 1/4 BSPP | 4 | 2369117100 | |
| 14 | UNION | UNION PIECE | M.JIC 37 (6)M 3/8 BSPP | 2 | 2369117000 | |
| 16 | UNION MÂLE | MALE UNION PIECE | JIC37 ( 6)M 1/2 BSPP | 1 | 2369117390 | |
| 17 | UNION | UNION PIECE | M JIC37 (10) M 3/8 BSPP | 2 | 2369117360 | |
| 25 | TÉ ÉGAL | EQUAL T-PIECE | JIC 37 | 1 | 2369147000 | |
| 27 | COLLIER SÉRIE DOUBLE | CHAIN (DOUBLE SERIES) | 428/28 -PP | 2 | 2389003490 | |
| 28 | PLAQUE DE PROTECTION | PROTECTIVE PLATE | | 1 | 2421609020 | |
| 29 | VIS | SCREW | H M8X50-22 CL.8.8 ZB | 1 | 2301231690 | |
| 30 | VIS | SCREW | INTERMÉDIAIRE TARAU- | 1 | 2330003120 | |
| 31 | SPIRALE PLASTIQUE SOUPLE | PLASTIC SPIRAL HOSE | | 2 | 2421903370 | |
| 36 | FLEXIBLE | FLEXIBLE | LG 2130 S5238 | 2 | 2369073790 | |
| 37 | FLEXIBLE | FLEXIBLE | 3/8" JIC F90-F | 1 | 2502004760 | |
| 38 | FLEXIBLE | FLEXIBLE | D-D S5469 LG 1100 | 1 | 2369075420 | |
| 39 | FLEXIBLE | FLEXIBLE | S5239 LG 1170 | 1 | 2369072150 | |
| 43 | FLEXIBLE | FLEXIBLE | 3/8" JIC F90-F | 1 | 2502004750 | |
| 44 | FLEXIBLE | FLEXIBLE | D-C90 S5469 LG 2550 | 1 | 2369075410 | |
| 45 | FLEXIBLE | FLEXIBLE | 3/4" ORFS F90-F | 2 | 2502004740 | |

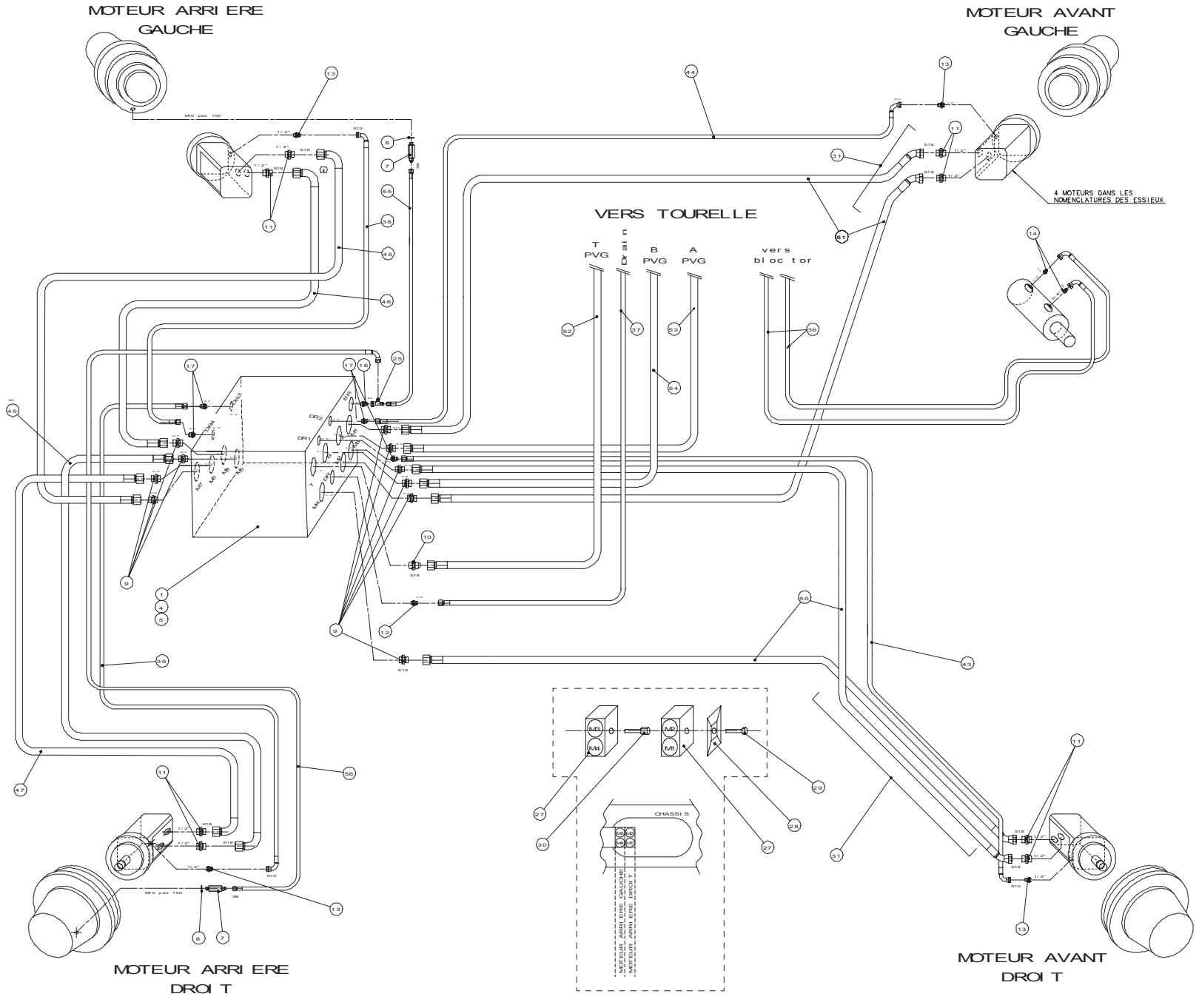
MOTEUR ARRIERE GAUCHE
MOTEUR AVANT GAUCHE
VERS TOURELLE
T PVG
Drain
B PVG
A PVG
vers bloc tor
4 MOTEURS DANS LES NOMENCLATURES DES ESSIEUX
CHASSIS
MOTEUR ARRIERE GAUCHE
MOTEUR ARRIERE DROIT
MOTEUR ARRIERE DROIT
MOTEUR AVANT DROIT

P21106 c

# HYDRAULIQUE CHÂSSIS
# CHASSIS HYDRAULICS



| Rep. | Désignation | Designation | Specification | Qty | Code | Up to / jusqu'à |
|---|---|---|---|---|---|---|
| 46 | FLEXIBLE | FLEXIBLE | DN20 ORFS LG=950 | 1 | 2502004510 | |
| 47 | FLEXIBLE | FLEXIBLE | 3/4" ORFS F90-F | 1 | 2502004540 | |
| 50 | FLEXIBLE | FLEXIBLE | 3/4" ORFS F45-F | 2 | 2502004520 | |
| 51 | FLEXIBLE | FLEXIBLE | 3/4" ORFS F45-F | 2 | 2502004530 | |
| 52 | FLEXIBLE | FLEXIBLE | 3/4" JIC F-F90 | 1 | 2502004720 | |
| 53 | FLEXIBLE | FLEXIBLE | 3/4" ORFS-F90-F | 1 | 2502004550 | |
| 54 | FLEXIBLE | FLEXIBLE | 3/4" ORFS-F90-F | 1 | 2502004710 | |
| 55 | FLEXIBLE | FLEXIBLE | SP.1707 1,420M | 1 | 2369070850 | |
| 56 | FLEXIBLE | FLEXIBLE | D-C90 S5238 LG 1840 | 1 | 2369073780 | |

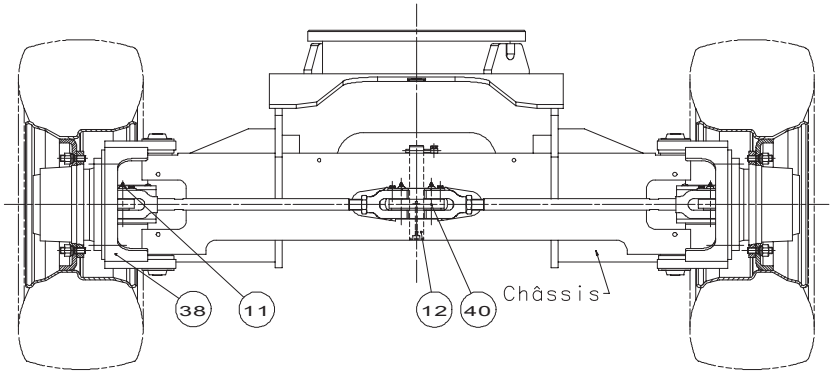


Coupe A-A

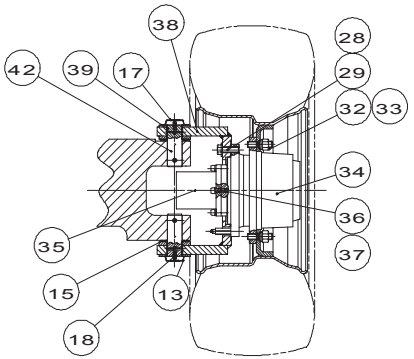


Coupe E-E
Echelle 1/2

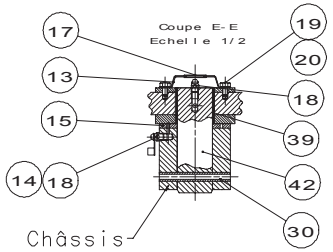


Coupe D-D
Echelle 1/2

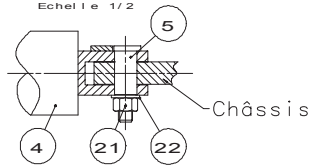


Coupe F-F
Echelle 1/2

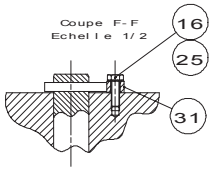


Coupe C-C
Echelle 1/2

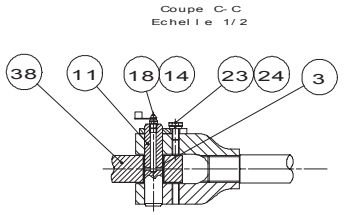


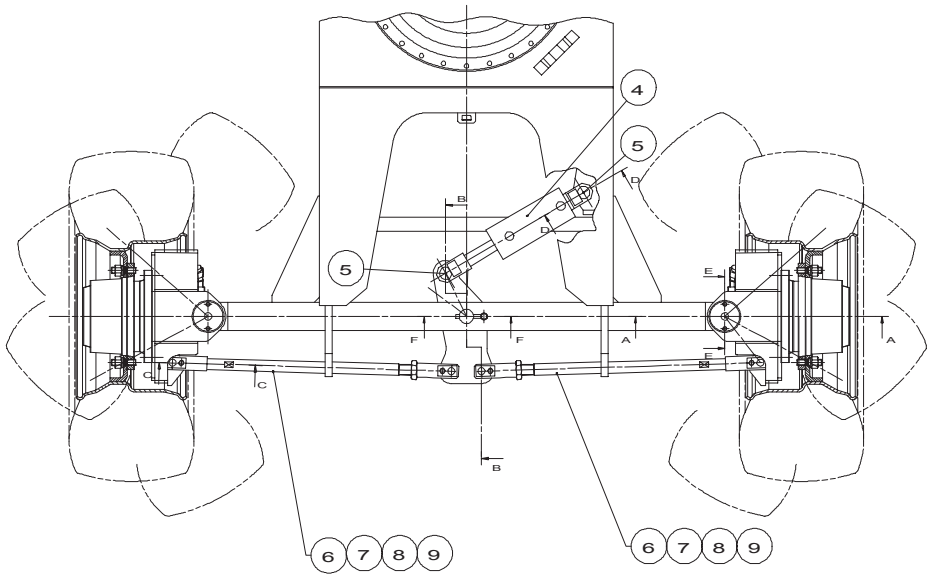


Coupe B-B
Echelle 1/2

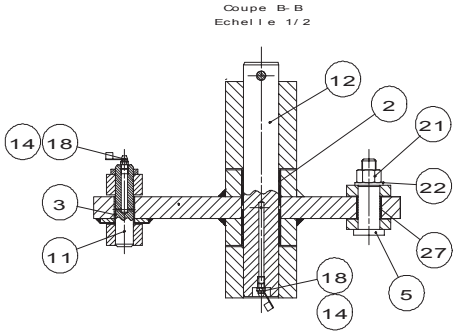


A14507 i

# ▲ ESSIEU MOTO-DIRECTEUR
# MOTOR GUIDING AXLE



| Rep. | Désignation | Designation | Specification | Qty | Code | Up to / jusqu'à |
|---|---|---|---|---|---|---|
| 4 | VÉRIN DE DIRECTION | STEERING CYLINDER | Ø 80/35 C=122 | 1 | 150B161340 | |
| | *VÉRIN DE DIRECTION* | *STEERING CYLINDER* | *BURNSIDE* | *1* | *150B161340* | |
| | *POCHETTE DE JOINTS* | *BAG OF SEALS* | | *1* | *2421693480* | |
| | *ECROU* | *NUT* | *HM30X2.BA5* | *1* | *2420506520* | |
| | *TÊTE* | *HEAD* | *DE TIGE* | *1* | *2422005460* | |
| | *TIGE* | *ROD* | | *1* | *2422005830* | |
| | *TÊTE DE VÉRIN* | | | *1* | *2420704180* | |
| | *PISTON* | *PISTON* | | *1* | *2421620070* | |
| | *VÉRIN DE DIRECTION* | *STEERING CYLINDER* | *HES* | *1* | *150B161340* | |
| 5 | AXE | PIN | ATTACHE VERIN | 2 | 168D143941 | |
| 6 | BARRE DE DIRECTION | STEERING BAR | | 2 | 152C163350 | |
| *7* | *BARRE DE DIRECTION* | *STEERING BAR* | | *1* | *152C163360* | |
| *8* | *CHAPE DE DIRECTION* | *STEERING YOKE* | | *2* | *152C163370* | |
| *9* | *ECROU À DROITE* | *RIGHT NUT* | *HM M30X200 CL.5* | *2* | *2341221270* | |
| 11 | AXE CHAPE DIRECTION | STEERING PIN SLOT | | 4 | 168C684830 | |
| 12 | AXE CENTRAL DE DIRECTION | DIRECTION CENTRE PIN | | 1 | 152C157500 | |
| 13 | CHAPEAU D'AXE | PIN COVER | | 4 | 116D147221 | |
| 14 | BOUCHON | PLUG | DE GRAISSEUR ROUGE | 9 | 2420301180 | |
| 15 | RONDELLE | WASHER | ELCO 3 Ø 80 | 4 | 1680801191 | |
| 16 | VIS | SCREW | H M10X35-35 CL.8.8 ZB | 1 | 2301231770 | |
| 17 | BOUCHON | PLUG | GPN 910/2967 | 4 | 2420204450 | |
| 18 | GRAISSEUR STANDARD DROIT | RIGHT-HAND STANDARD LUBRICA- | M8 X 125 | 13 | 2420701540 | |
| 19 | VIS | SCREW | H M6X10-10 CL.8.8 ZB | 8 | 2331231300 | |
| 20 | RONDELLE À DENTS | TOOTH LOCK WASHER | DEC 6 ZB | 8 | 2351301070 | |
| 21 | ECROU AUTOFREINÉ | SELF-LOCKED NUT | H FR M16 CL. 8 ZB | 2 | 2349221540 | |
| 22 | RONDELLE PLATE | FLAT WASHER | M 16 ZB | 2 | 2351112130 | |

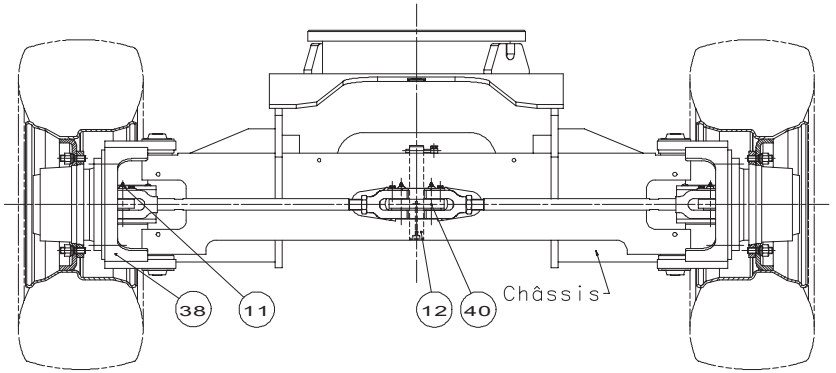


Coupe A-A

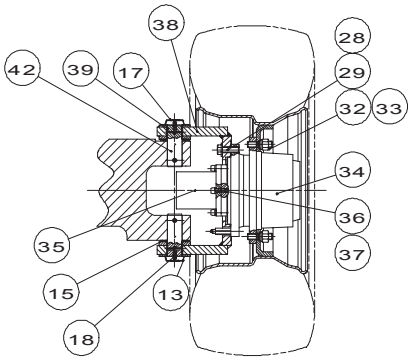


Coupe E-E
Echelle 1/2

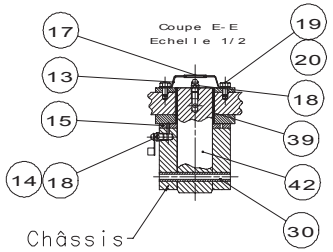


Coupe D-D
Echelle 1/2

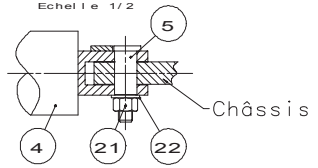


Coupe F-F
Echelle 1/2

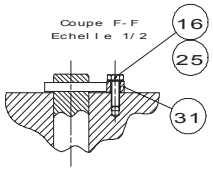


Coupe C-C
Echelle 1/2

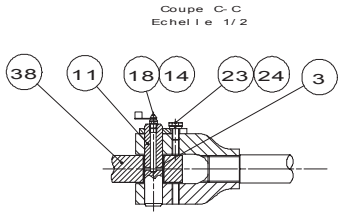


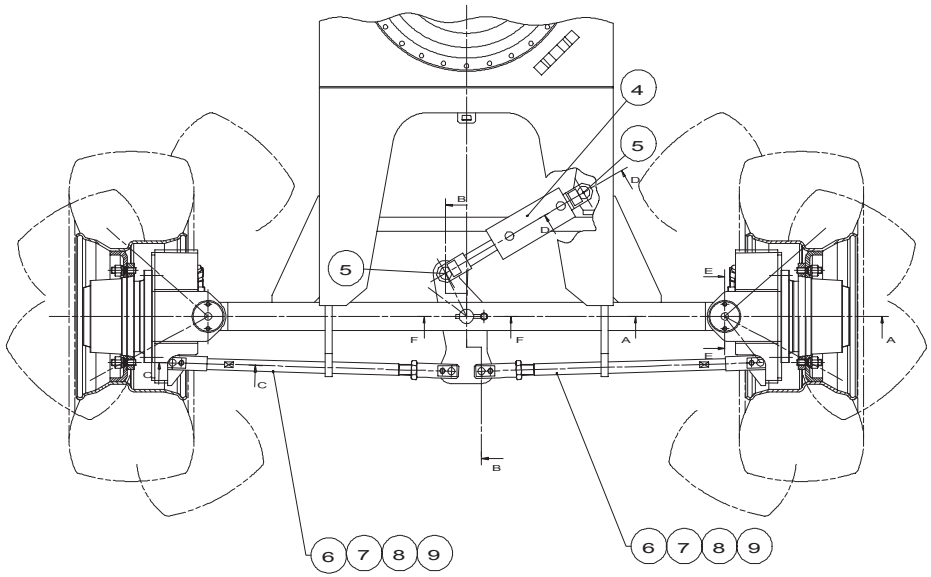


Coupe B-B
Echelle 1/2

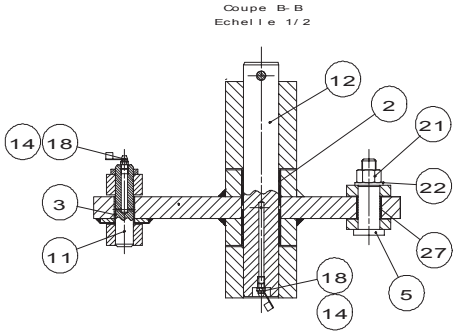


A14507 i

# ESSIEU MOTO-DIRECTEUR
# MOTOR GUIDING AXLE



| Rep. | Désignation | Designation | Specification | Qty | Code | Up to / jusqu'à |
|---|---|---|---|---|---|---|
| 23 | VIS | SCREW | H M8X16-16 CL.8.8 ZB | 4 | 2331231400 | |
| 24 | RONDELLE ÉLASTIQUE | RUBBER WASHER | W 8 ZB | 4 | 2351201070 | |
| 25 | RONDELLE À DENTS | TOOTH LOCK WASHER | DEC 10 ZB | 1 | 2351301110 | |
| 28 | VIS | SCREW | H M16X50-38 CL.8.8 ZB | 16 | 2331232340 | |
| 29 | RONDELLE ÉLASTIQUE CUVET | | M16 | 16 | 2351900010 | |
| 30 | GOUPILLE ÉLASTIQUE | FLEXIBLE PIN | E 12-80 | 4 | 2352213150 | |
| 31 | CHAPE MÂLE LISSE | SMOOTH MALE SLOT | | 1 | 132D154320 | |
| 32 | GOUJON | STUD | | 16 | 116D154490 | |
| 33 | ECROU DE ROUE | WHEEL NUT | 52 M18 X 150 | 16 | 2600502110 | |
| 34 | RÉDUCTEUR DE TRANSLATION | TRAVEL REDUCER | R22.4 SANS FREIN S6018 | 2 | 2325000040 | |
| 35 | MOTEUR | MOTOR | OMSS 80 | 2 | 2431203160 | |
| | *POCHETTE DE JOINTS* | *BAG OF SEALS* | | *1* | *2421693750* | |
| 36 | VIS | SCREW | CHC M10X30-30 CL.10.9 DC | 8 | 2338331370 | |
| 37 | RONDELLE ÉLASTIQUE | RUBBER WASHER | W 10 ZB | 8 | 2351902930 | |
| 38 | PIVOT DIRECTION | DIRECTION PIVOT | | 2 | 137P201000 | |
| | *BAGUE* | *RING* | *PM 20X30 DX* | *1* | *2390150600* | |
| | *BAGUE* | *RING* | *PM 40/30 DX SIC* | *2* | *2390150450* | |
| 40 | LEVIER DE DIRECTION | DIRECTION LEVER | | 1 | 137P202700 | |
| | *BAGUE* | *RING* | *PM 40X40 DX* | *2* | *2390150500* | |
| | *BAGUE* | *RING* | *DU 25.25* | *1* | *2390150270* | |
| | *BAGUE* | *RING* | *DX 20.25* | *2* | *2390150520* | |
| 42 | DEMI-AXE DE PIVOT | 1/2 PIVOTING AXIS | | 1 | 137P203390 | |
| | | | | | | |
| | | | | | | |
| | | | | | | |
| | | | | | | |

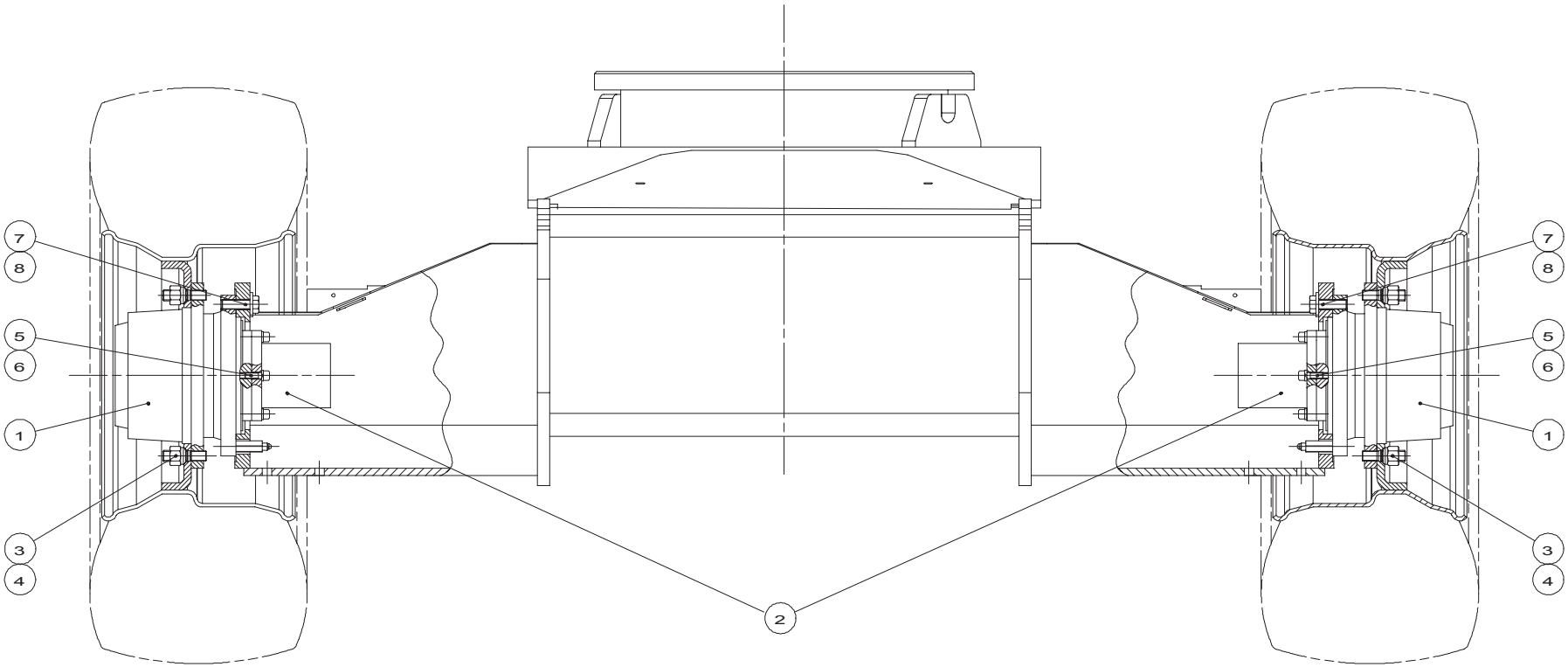


B16036 e

# ▲ ESSIEU MOTEUR
# DRIVING AXLE-(TREE)

◀ A6 ▶

| Rep. | Désignation | Designation | Specification | Qty | Code | Up to / jusqu'à |
|---|---|---|---|---|---|---|
| 1 | RÉDUCTEUR DE TRANSLATION | TRAVEL REDUCER | R22.4 AVEC FREIN S6017 | 2 | 2325000030 | |
| 2 | MOTEUR | MOTOR | OMSS 80 | 2 | 2431203160 | |
| | *POCHETTE DE JOINTS* | *BAG OF SEALS* | | *1* | *2421693750* | |
| 3 | ECROU DE ROUE | WHEEL NUT | 52 M18 X 150 | 16 | 2600502110 | |
| 4 | GOUJON | STUD | | 16 | 116D154490 | |
| 5 | VIS | SCREW | CHC M10X30-30 CL.10.9 DC | 8 | 2338331370 | |
| 6 | RONDELLE ÉLASTIQUE | RUBBER WASHER | W 10 ZB | 8 | 2351902930 | |
| 7 | VIS | SCREW | H M16X50-38 CL.8.8 ZB | 16 | 2331232340 | |
| 8 | RONDELLE ÉLASTIQUE CUVET | | M16 | 16 | 2351900010 | |

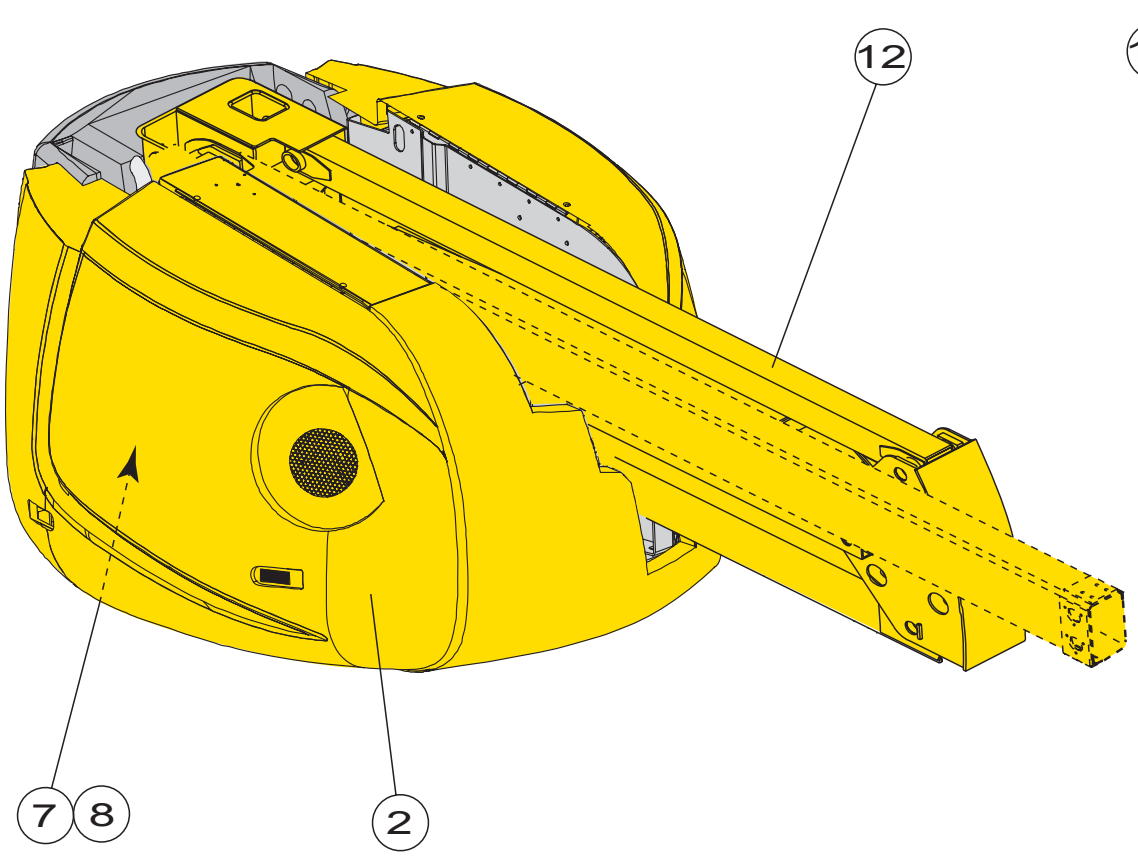


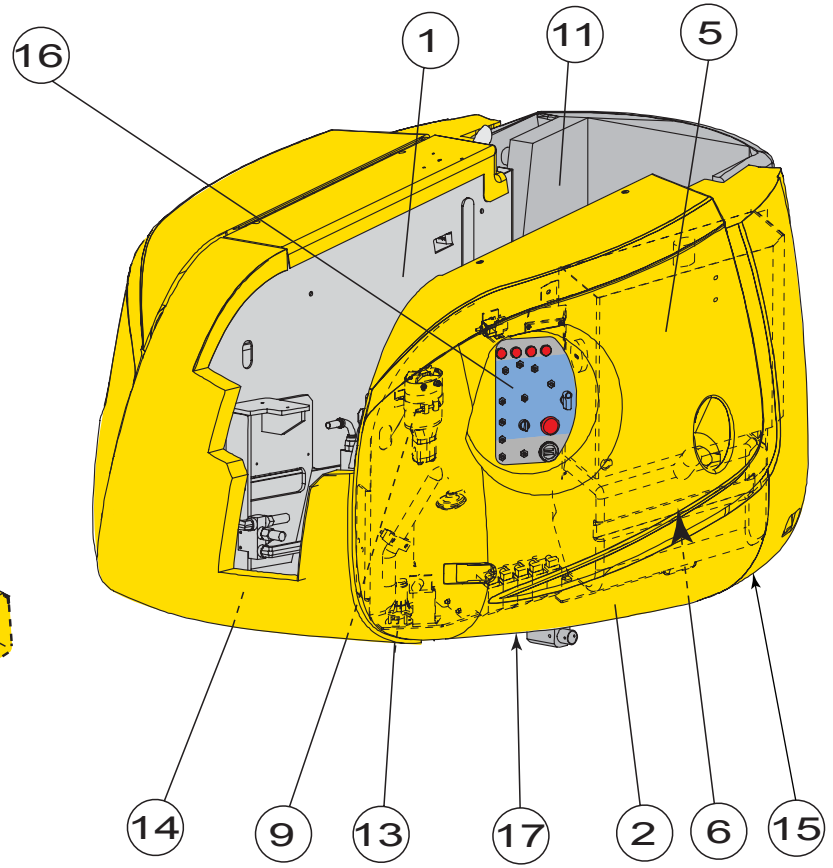


10

3 - 4

Ensemble tourelle HA16SPX

# ▲ TOURELLE
# TURRET

◀ B ▶

| Rep. | Désignation | Designation | Specification | Up to / jusqu'à |
|---|---|---|---|---|
| 1 | CHÂSSIS TOURELLE | TURRET FRAME | | |
| 2 | CAPOTAGE TOURELLE | TURRET COWLING | | |
| 3 | HYDRAULIQUE TOURELLE | TURRET HYDRAULIC INSTALLATION | | |
| 4 | SCHÉMA HYDRAULIQUE | HYDRAULIC DIAGRAM | | |
| 5 | RÉSERVOIR HYDRAULIQUE | HYDRAULIC RESERVOIR | | |
| 6 | RÉSERVOIR DE CARBURANT | FUEL TANK | | |
| 7 | GRP MOTEUR THERM.+POMPE | THERMAL MOTOR UNIT + PUMP | | |
| 8 | BATTERIE DE DÉMARRAGE | STARTING BATTERY | | |
| 9 | MONT. CONTACT. ÉLECTROP. | ELECTRIC PUMP CONTACT SWITCH FIT- | | |
| 10 | ELECTRICITÉ TOURELLE | TURNTABLE ELECTRICITY | | |
| 11 | CONTREPOIDS | COUNTERWEIGHT | | |
| 12 | BRAS ARTICULÉS | SWIVEL ARMS | | |
| 13 | DÉVERS | « TILT » LABEL | | |
| 14 | COUPURE G.V. | HIGH SPEED CUT-OFF | | |
| 15 | CONTREPOIDS ADDITIONNEL | ADDITIONAL COUNTERWEIGHT | | |
| 16 | CALCULATEUR HEAD | | | |
| 17 | COURONNE ORIENTATION | SLEW RING | | |
| | | | | |
| | | | | |
| | | | | |
| | | | | |
| | | | | |
| | | | | |
| | | | | |
| | | | | |
| | | | | |

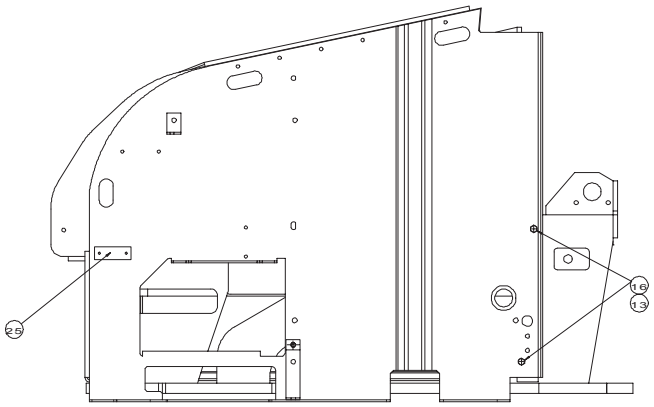
25
16
13

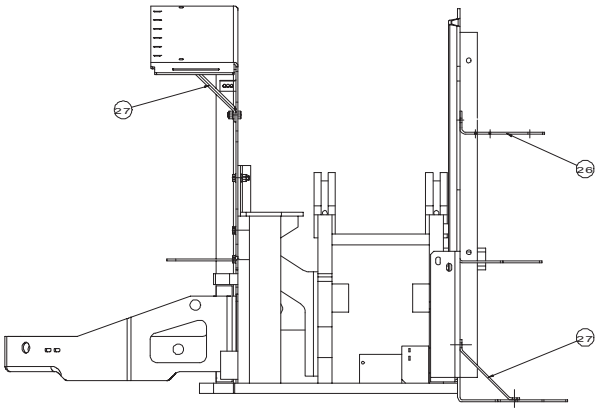
27
26
27

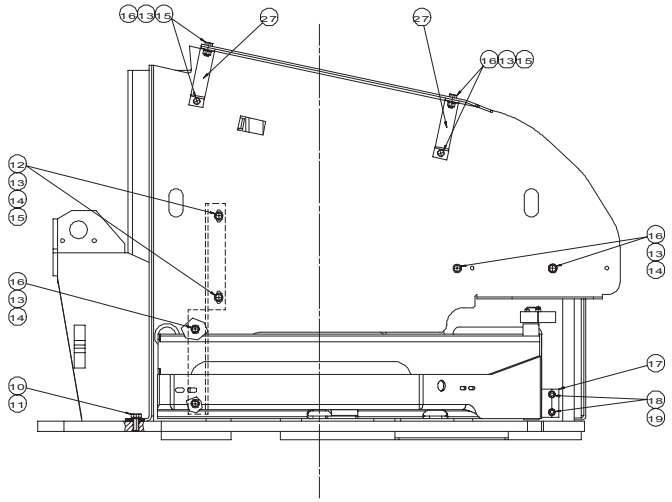
16 13 15
27
27
16 13 15
12
13
14
15
16
13
14
16
13
14
10
11
17
18
19

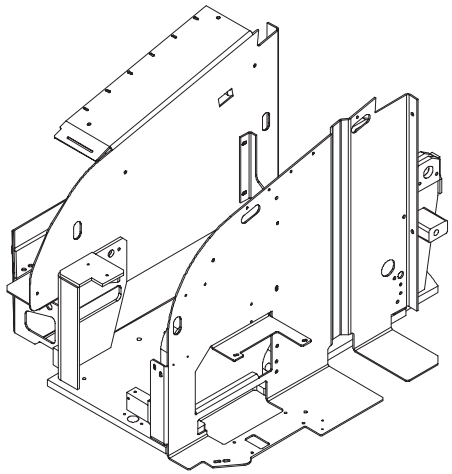

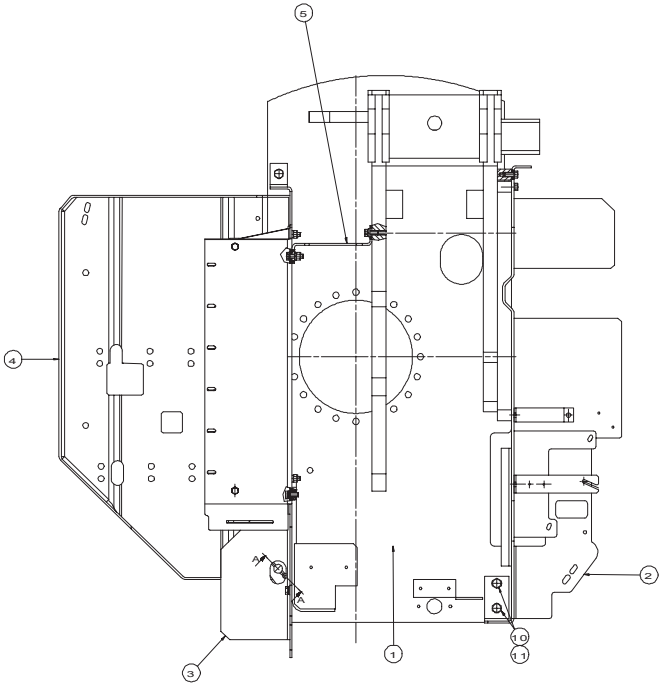
5
4
2
3
1
10
11

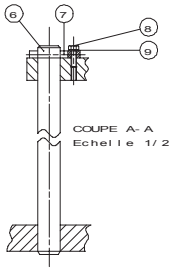
6
7
8
9
COUPE A- A
Echelle 1/2

A14802 c

# ▲ CHÂSSIS TOURELLE
# TURRET FRAME

◀ B1 ▶

| Rep. | Désignation | Designation | Specification | Qty | Code | Up to / jusqu'à |
|---|---|---|---|---|---|---|
| 1 | CHÂSSIS TOURELLE | TURRET FRAME | | 1 | 179A146990 | |
| 2 | CLOISON HYDRAULIQUE | HYDRAULIC PARTITION | | 1 | 179A147010 | |
| 3 | CLOISON MOTEUR | MOTOR PARTITION | | 1 | 179A147100 | |
| 4 | FOND BAC MOTEUR | MOTOR TANK BASE | | 1 | 179A147050 | |
| 5 | RENFORT | STRENGTHENER | CLOISON MOTEUR | 1 | 179C165750 | |
| 6 | AXE DE ROTATION | ROTATION AXIS | | 1 | 152D162120 | |
| 7 | CHAPE MÂLE LISSE | SMOOTH MALE SLOT | Ø8 50MM | 1 | 173D158320 | |
| 8 | VIS | SCREW | H M6X25-25 CL.8.8 ZB | 1 | 2331231340 | |
| 9 | RONDELLE ÉLASTIQUE | RUBBER WASHER | W 6 ZB | 1 | 2351201050 | |
| 10 | VIS | SCREW | H M16X40-38 CL.8.8 ZB | 3 | 2331232230 | |
| 11 | RONDELLE ÉLASTIQUE | RUBBER WASHER | W 16 ZB | 3 | 2351201120 | |
| 12 | VIS | SCREW | H M12X40-40 CL.8.8 ZB | 2 | 2331231790 | |
| 13 | RONDELLE ÉLASTIQUE | RUBBER WASHER | W 12 ZB | 12 | 2351201100 | |
| 14 | RONDELLE PLATE | FLAT WASHER | M 12 ZB | 8 | 2351112110 | |
| 15 | ECROU | NUT | H M12 CL. 8 ZB | 6 | 2341221090 | |
| 16 | VIS | SCREW | H M12X30-30 CL.8.8 ZB | 10 | 2331231740 | |
| 17 | BUTÉE | STOP | BAC MOTEUR S5820 | 1 | 179C166260 | |
| 18 | VIS | SCREW | CHC M10X25-25 CL.8,8 ZB | 2 | 2308231890 | |
| 19 | RONDELLE ÉLASTIQUE | RUBBER WASHER | W 10 ZB | 2 | 2351902930 | |
| 25 | CALE | CHOCK | DE COLLIER STAUFF | 1 | 179D166470 | |
| 26 | SUPPORT | HOLDER | PUPITRE TOURELLE | 1 | 179P203240 | |
| 27 | RENFORT | STRENGTHENER | CLOISON | 3 | 179P203250 | |
| | | | | | | |
| | | | | | | |
| | | | | | | |
| | | | | | | |

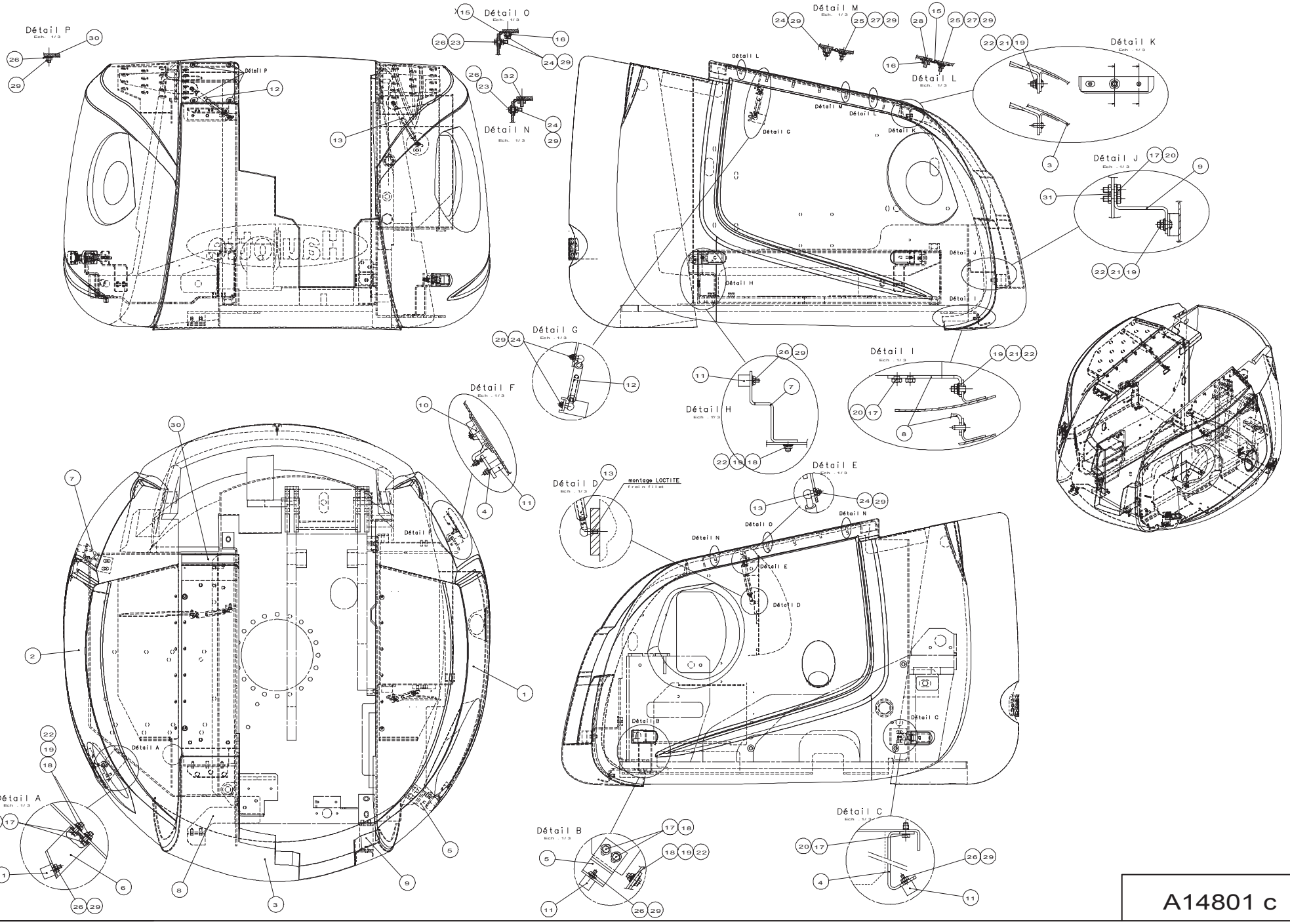
Détail P
Ech. 1/3
Détail O
Ech. 1/3
Détail N
Ech. 1/3
Détail M
Ech. 1/3
Détail L
Ech. 1/3
Détail K
Ech. 1/3
Détail J
Ech. 1/3
Détail G
Ech. 1/3
Détail F
Ech. 1/3
Détail H
Ech. 1/3
Détail I
Ech. 1/3
Détail D
Ech. 1/3
Détail E
Ech. 1/3
Détail A
Ech. 1/3
Détail B
Ech. 1/3
Détail C
Ech. 1/3
montage LOCTITE
Frein filet
A14801 c

# ▲ CAPOTAGE TOURELLE
# TURRET COWLING



| Rep. | Désignation | Designation | Specification | Qty | Code | Up to / jusqu'à |
|---|---|---|---|---|---|---|
| 1 | CAPOT DR | RIGHT HOOD | | 1 | 179A147140 | |
| 2 | CAPOT GA | LEFT HOOD | | 1 | 179A147160 | |
| 3 | CAPOT CENTRAL | CENTRE HOOD | | 1 | 179A147150 | |
| 4 | BUTÉE DE CAPOT | HOOD STOP | ARRIERE DROIT | 1 | 179B165070 | |
| 5 | BUTÉE DE CAPOT | HOOD STOP | AVANT DROIT | 1 | 179B165060 | |
| 6 | BUTÉE DE CAPOT | HOOD STOP | AVANT GAUCHE | 1 | 179B165050 | |
| 7 | BUTÉE DE CAPOT | HOOD STOP | ARRIERE GAUCHE | 1 | 179B165400 | |
| 8 | SUPPORT | HOLDER | INFERIEUR CAPOT CEN- | 1 | 179C170270 | |
| 9 | SUPPORT | HOLDER | DROIT CAPOT CENTRAL | 1 | 179C170280 | |
| 10 | LOQUET ÉTANCHE À LEVIER | LEVER-OPERATED SEALED LATCH | | 4 | 2421203210 | |
| 11 | BUTÉE CYLINDRIQUE | CYLINDRICAL STOP | M8 DIAM.30 REF. C5-21 | 4 | 2421906460 | |
| 13,12 | RESSORT À GAZ | GAS SPRING | REF. 1150N | 2 | 2421808170 | |
| 15 | CHARNIÈRE CAPOT | COVER HINGE | MOTEUR | 2 | 179C170180 | |
| 16 | REGLETTE | POINTER | CAPOTAGE TOURELLE | 2 | 179C169350 | |
| 17 | VIS | SCREW | H M12X30-30 CL.8.8 ZB | 10 | 2331231740 | |
| 18 | RONDELLE PLATE | FLAT WASHER | M 12 ZB | 10 | 2351112110 | |
| 19 | RONDELLE À DENTS | TOOTH LOCK WASHER | DEC 12 ZB | 8 | 2351301120 | |
| 20 | RONDELLE ÉLASTIQUE | RUBBER WASHER | W 12 ZB | 6 | 2351201100 | |
| 21 | RONDELLE PLATE | FLAT WASHER | LL 12 ZB | 3 | 2351124110 | |
| 22 | ECROU | NUT | H M12 CL. 8 ZB | 9 | 2341221090 | |
| 23 | VIS | SCREW | H M8X30-30 CL.8.8 ZB | 6 | 2331231440 | |
| 24 | RONDELLE ÉLASTIQUE | RUBBER WASHER | W 8 ZB | 17 | 2351201070 | |
| 25 | RONDELLE PLATE | FLAT WASHER | LL 8 ZB | 6 | 2351124070 | |
| 26 | RONDELLE PLATE | FLAT WASHER | M 8 ZB | 14 | 2351112070 | |
| 27 | RONDELLE À DENTS | TOOTH LOCK WASHER | DEC 8 ZB | 6 | 2351301090 | |
| 28 | VIS | SCREW | FHC M8X30-30 CL.10.9 ZB | 2 | 2307331720 | |

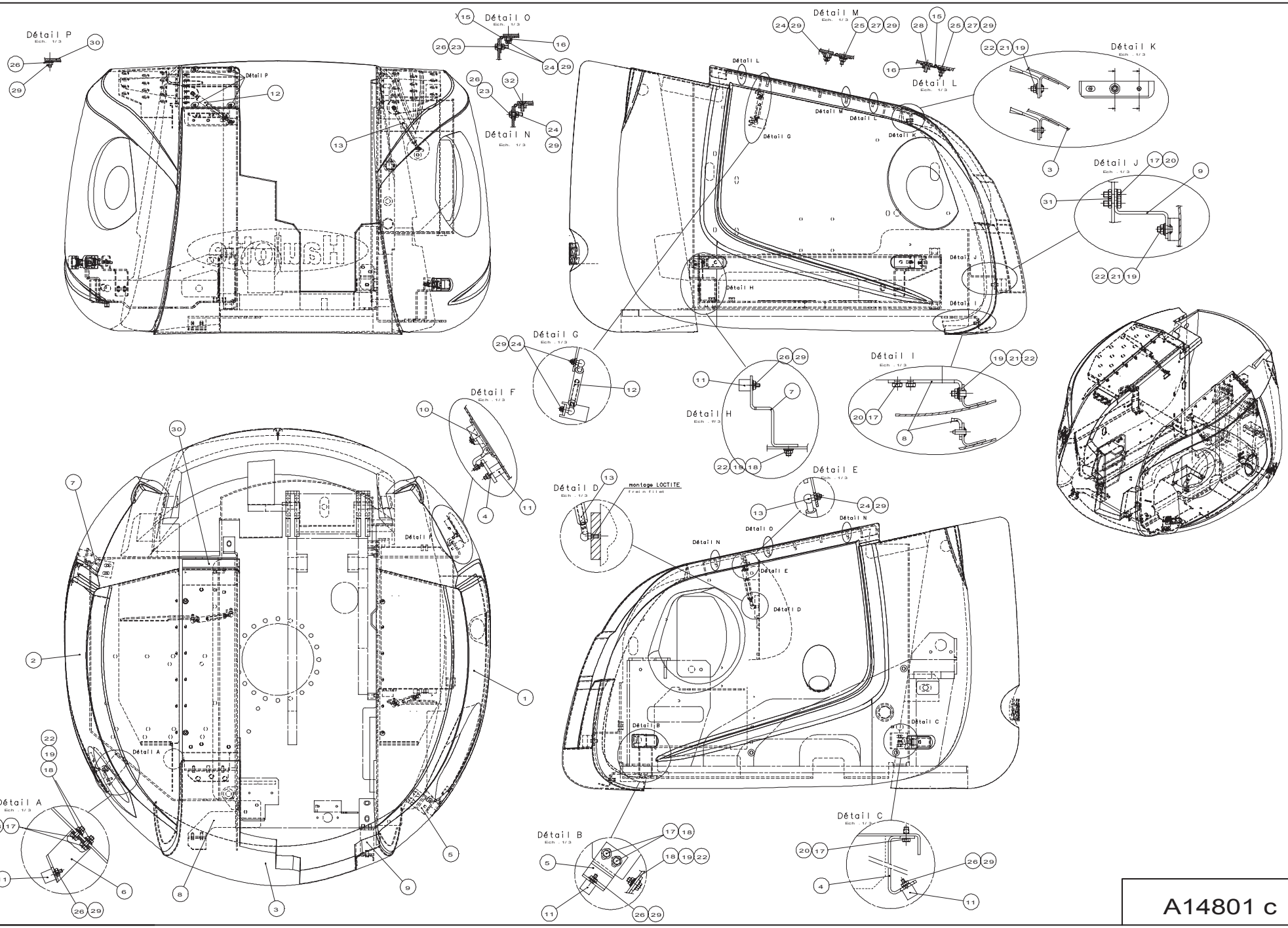
Détail P
Ech. 1/3
Détail O
Ech. 1/3
Détail N
Ech. 1/3
Détail M
Ech. 1/3
Détail L
Ech. 1/3
Détail K
Ech. 1/3
Détail J
Ech. 1/3
Détail G
Ech. 1/3
Détail F
Ech. 1/3
Détail H
Ech. 1/3
Détail I
Ech. 1/3
Détail D
Ech. 1/3
Détail E
Ech. 1/3
Détail A
Ech. 1/3
Détail B
Ech. 1/3
Détail C
Ech. 1/3
montage LOCTITE
frein filet
A14801 c

# CAPOTAGE TOURELLE
# TURRET COWLING



| Rep. | Désignation | Designation | Specification | Qty | Code | Up to / jusqu'à |
|---|---|---|---|---|---|---|
| 29 | ECROU | NUT | H M8 CL. 8 ZB | 34 | 2341221070 | |
| 30 | CAPOT SUP | TOP COVER | MOTEUR | 1 | 179B165950 | |
| 31 | ECROU | NUT | H M10 CL. 8 ZB | 2 | 2341221080 | |
| 32 | VIS | SCREW | FHC M8X35-35 CL.10.9 DC | 2 | 2307233230 | |

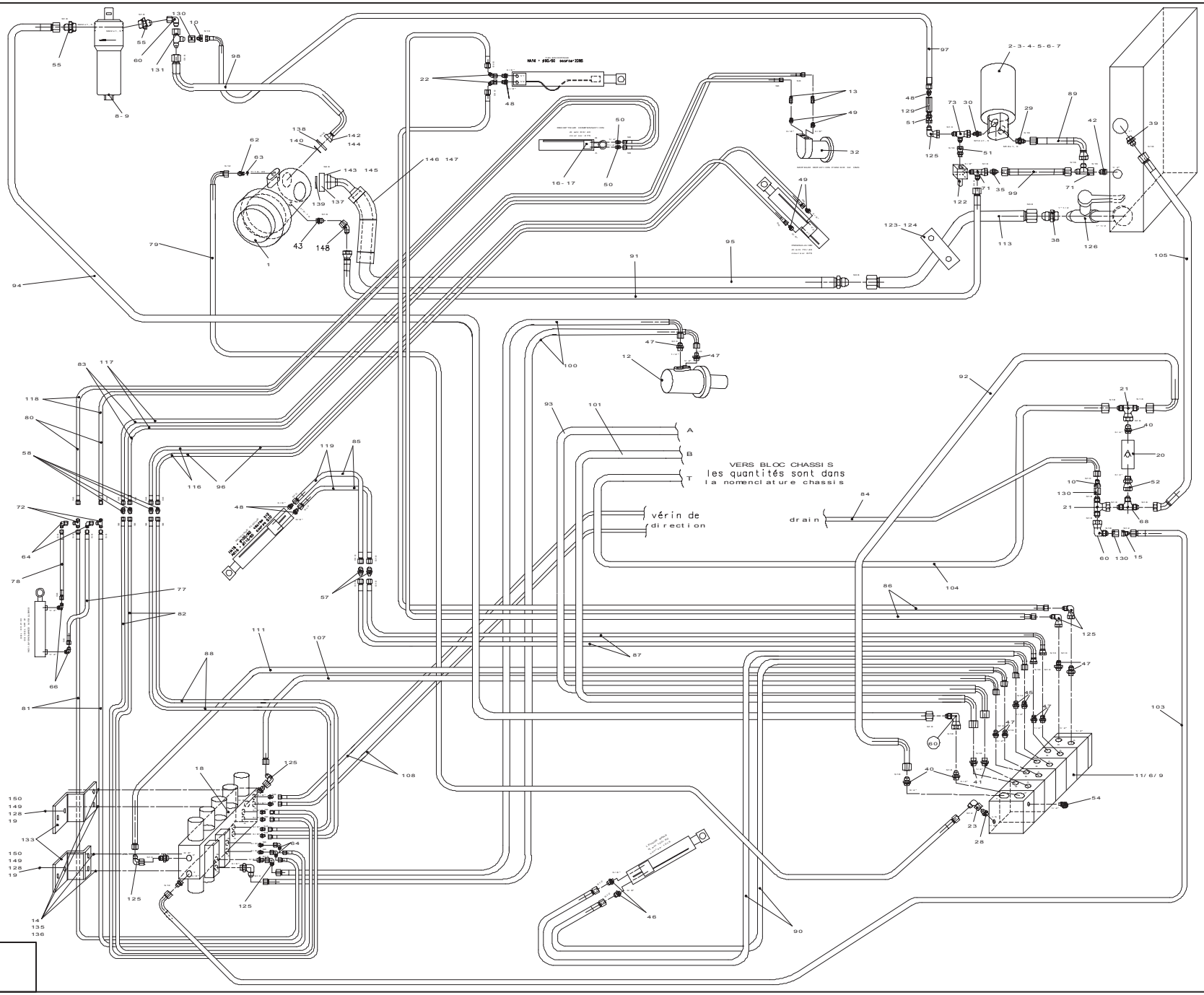
VERS BLOC CHASSIS
les quantités sont dans
la nomenclature chassis
A
B
T
vérin de
direction
drain

P23399 a

# ▲ HYDRAULIQUE TOURELLE
# TURRET HYDRAULIC INSTALLATION



| Rep. | Désignation | Designation | Specification | Qty | Code | Up to / jusqu'à |
|---|---|---|---|---|---|---|
| 1 | POMPE HYDRAULIQUE | HYDRAULIC PUMP | S 5660 | 1 | 2426210260 | |
| | *POCHETTE DE JOINTS* | *BAG OF SEALS* | | *1* | *2421694230* | |
| 2 | GROUPE ÉLECTRO-POMPE | ELECTROPUMP UNIT | IP66 1,5KW | 1 | 2440704140 | |
| | *MOTEUR ÉLECTRIQUE* | *ELECTRIC MOTOR* | | *1* | *2431361040* | |
| | *BAGUE ÉTANCHÉITÉ* | | | *1* | *2420212520* | |
| | *CHARBON* | *COAL* | | *1* | *2420323180* | |
| | *JEU DE JOINTS* | | | *1* | *2421003390* | |
| | *POMPE HYD ENGRENAGE* | | | *1* | *2421620480* | |
| | *RONDELLE* | *WASHER* | | *2* | *2421809730* | |
| | *ÉCROU EXAGONAL* | | | *2* | *2420506790* | |
| | *VIS TÊTE EXAGONAL* | | | *2* | *2422205500* | |
| | *CAPUCHON DE PROTECTION* | | | *1* | *2420323190* | |
| | *CAPUCHON DE PROTECTION* | | | *1* | *2420323200* | |
| | *JOINT TORIQUE* | *O-RING* | | *1* | *2421003400* | |
| 3 | COLLIER DE FIXATION | CABLE CLIP | Ø110-120 | 1 | 2389003190 | |
| 4 | ECROU | NUT | H M8 CL. 8 ZB | 2 | 2341221070 | |
| 5 | RONDELLE À DENTS | TOOTH LOCK WASHER | DEC 8 ZB | 2 | 2351301090 | |
| 6 | VIS | SCREW | H M8X25-25 CL.8.8 ZB | 10 | 2331231430 | |
| 7 | RONDELLE PLATE | FLAT WASHER | M 8 ZB | 2 | 2351112070 | |
| 8 | FILTRE PRESSION | PRESSURE FILTER | | 1 | 2420602940 | |
| 9 | RONDELLE ÉLASTIQUE | RUBBER WASHER | W 8 ZB | 8 | 2351201070 | |
| 10 | RÉDUCTION | REDUCTION | JIC 37 | 2 | 2369191250 | |
| 11 | BLOC DE DISTRIBUTION | DISTRIBUTION BLOCK | S6060 | 1 | 2503000490 | |
| 12 | MOTEUR | MOTOR | EPM160C0 SP.5090 | 1 | 2431203450 | |
| | *POCHETTE DE JOINTS* | *BAG OF SEALS* | | *1* | *2421692410* | |
| | *POCHETTE DE JOINTS* | *BAG OF SEALS* | | *1* | *2421693150* | |

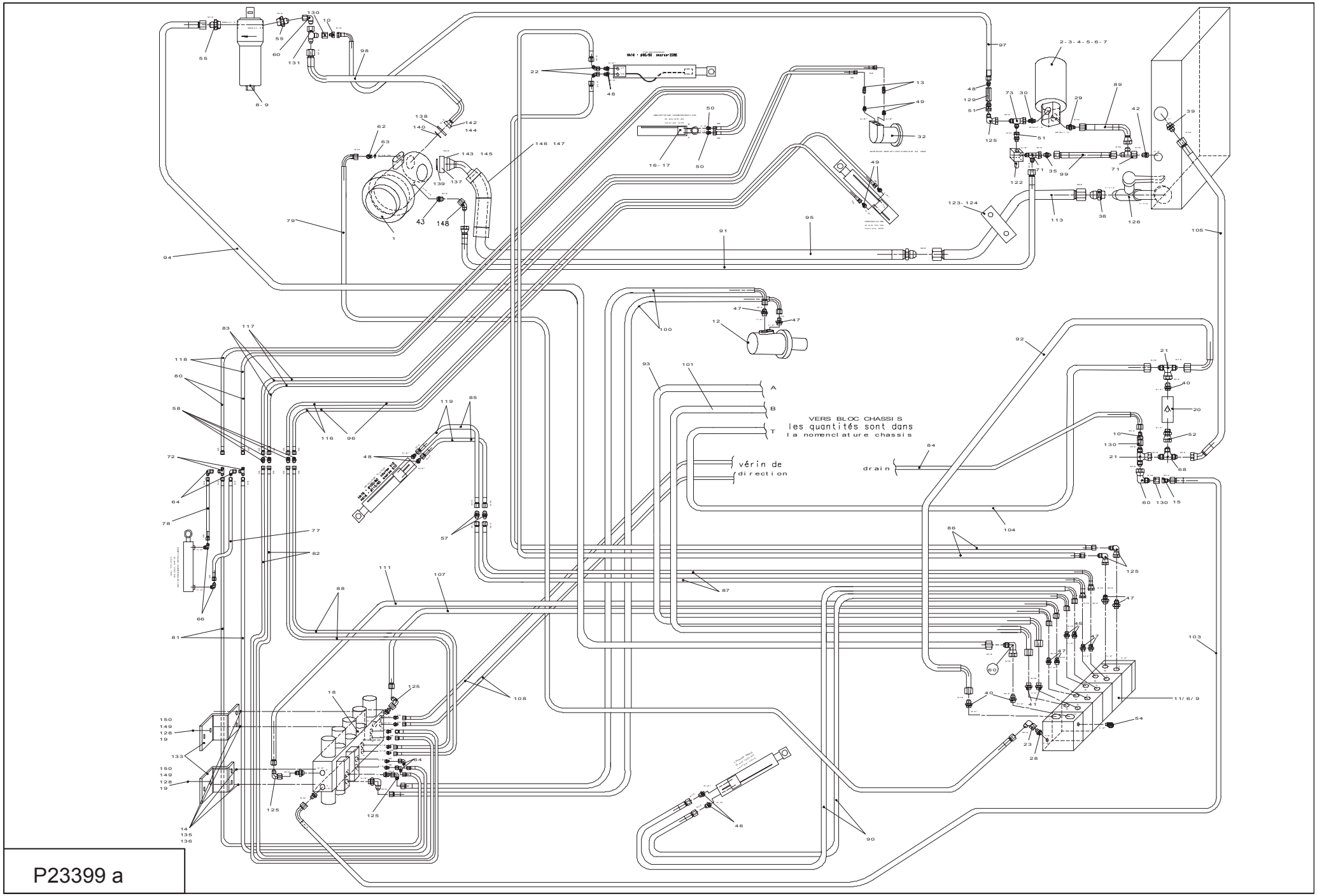
VERS BLOC CHASSIS
les quantités sont dans
la nomenclature chassis
vérin de
direction
drain
A
B
T

P23399 a

# HYDRAULIQUE TOURELLE
# TURRET HYDRAULIC INSTALLATION



| Rep. | Désignation | Designation | Specification | Qty | Code | Up to / jusqu'à |
|---|---|---|---|---|---|---|
| 13 | RACCORD AVEC GICLEUR DIA | | Ø1 | 2 | 116D153220 | |
| 14 | VIS | SCREW | H M6X20-20 CL.8.8 ZB | 4 | 2331231330 | |
| 15 | RÉDUCTION M-F JIC | CONNECTING SOCKET | 1+1/16 -12 - 3/4 - 16 | 1 | 2369191270 | |
| 16 | CLAPET ANTI-RETOUR DBLE | ONE-WAY DOUBLE VALVE | | 1 | 2426602580 | |
| 17 | VIS | SCREW | CHC M6X35-24 CL.8,8 ZB | 3 | 2308231520 | |
| 18 | BLOC TOUT OU RIEN | ON/OFF MOVEMENTS BLOCK | S6053 | 1 | 2503000470 | |
| 19 | RONDELLE À DENTS | TOOTH LOCK WASHER | DEC 5 ZB | 2 | 2351301060 | |
| 20 | CLAPET ANTI-RETOUR | ONE-WAY VALVE | 10B S5594 | 1 | 2426602780 | |
| 21 | TÉ ÉGAL TOURNANT | ROTATING EQUAL T-PIECE | JIC 37 | 2 | 2369155200 | |
| 22 | COUDE MALE 135° | | JIC37 (10) | 2 | 2369134390 | |
| 23 | COUDE ÉGAL | EVEN BEND | JIC 37 90° | 1 | 2369135120 | |
| 28 | UNION | UNION PIECE | M.JIC37 (12) M1/4' | 1 | 2369110080 | |
| 29 | UNION | UNION PIECE | M JIC37 (16) | 1 | 2369112090 | |
| 30 | UNION | UNION PIECE | JIC 37 | 1 | 2369169010 | |
| 32 | MOTEUR | MOTOR | EPMMS32C | 1 | 2431203300 | |
| *Non* | *POCHETTE DE JOINTS* | *BAG OF SEALS* | | *1* | *2421692900* | |
| *Non* | *POCHETTE DE JOINTS* | *BAG OF SEALS* | | *1* | *2421693900* | |
| 33 | BRIDE | FLANGE | DE MONTAGE MOTEUR | 1 | 2420204880 | |
| 35 | UNION | UNION PIECE | M.JIC37 (16)M 3/8 BSPP | 1 | 2369110150 | |
| 38 | UNION | UNION PIECE | M.JIC37 (38)M 1'1/2 BSPP | 1 | 2369110420 | |
| 39 | UNION | UNION PIECE | M.JIC37 (18)M 1 BSPP | 1 | 2369110220 | |
| 40 | UNION | UNION PIECE | M.JIC 37 (18)M 3/4 BSPP | 3 | 2369117210 | |
| 41 | UNION | UNION PIECE | M.ORFS M 1/2 BSPP | 2 | 2501001640 | |
| 42 | UNION | UNION PIECE | M.JIC37 (16)M 1/2 BSPP | 1 | 2369110170 | |
| 43 | UNION | UNION PIECE | M.JIC37 (16)M.7/8-14 UNF | 1 | 2369111400 | |
| 45 | UNION | UNION PIECE | JIC 37 BS | 2 | 2369117110 | |

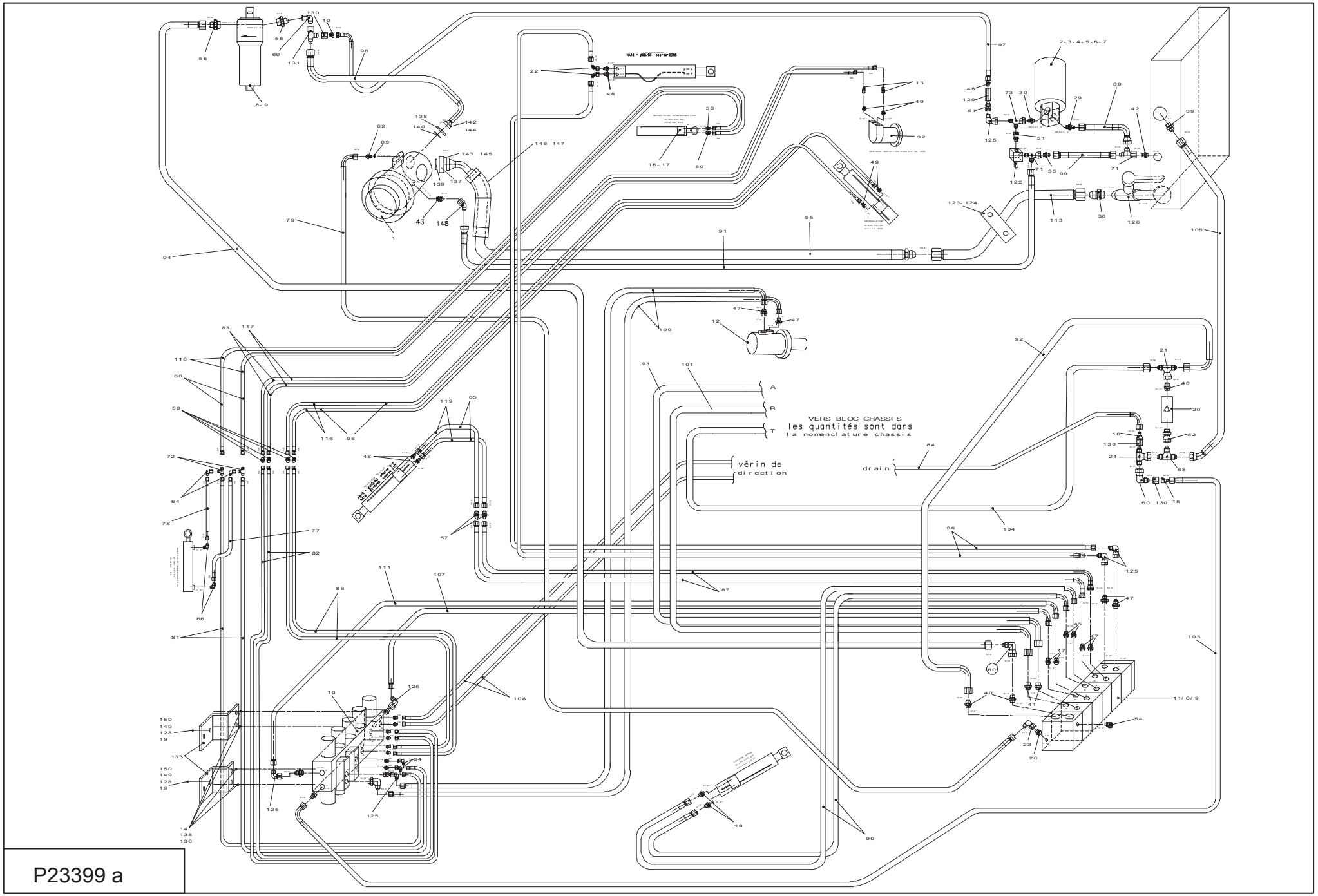
VERS BLOC CHASSIS
les quantités sont dans
la nomenclature chassis
A
B
T
vérin de
direction
drain

P23399 a

# HYDRAULIQUE TOURELLE
# TURRET HYDRAULIC INSTALLATION



| Rep. | Désignation | Designation | Specification | Qty | Code | Up to / jusqu'à |
|---|---|---|---|---|---|---|
| 46 | UNION | UNION PIECE | JIC 37 BS | 2 | 2369117090 | |
| 47 | UNION | UNION PIECE | JIC 37 BS | 8 | 2369117370 | |
| 48 | UNION | UNION PIECE | M JIC37 (10) M 3/8 BSPP | 5 | 2369117360 | |
| 49 | UNION | UNION PIECE | M.JIC 37 (6)M 3/8 BSPP | 4 | 2369117000 | |
| 50 | UNION | UNION PIECE | M.JIC 37 (6)M 1/4 BSPP | 2 | 2369117120 | |
| 51 | ADAPTEUR | ADAPTOR | JIC37 (10)M3/8 BSPP | 2 | 2369164070 | |
| 52 | ADAPTEUR | ADAPTOR | JIC37 (18)M-F3/4' BSPP | 1 | 2369164210 | |
| 54 | PRISE MINIMESS | MINIMESS TAP | 1/4' G | 1 | 2441604150 | |
| 55 | UNION | UNION PIECE | JIC 37 ME | 2 | 2369112130 | |
| 57 | UNION ÉGALE | UNION PIECE | M. JIC 37 (10) | 2 | 2369101130 | |
| 58 | UNION ÉGALE | UNION PIECE | M. JIC 37 (6) | 4 | 2369101090 | |
| 60 | COUDE | BEND | JIC 37 90° | 3 | 2369135180 | |
| 62 | RACCORD M JIC37 (12) M 7 | | M-3/4-16, M-7/16-20 | 1 | 150D154050 | |
| 63 | JOINT TORIQUE | O-RING | Ø8,92 D TORE | 1 | 2394900180 | |
| 64 | COUDE ORIENTABLE | ADJUSTABLE BEND | JIC 37 90° (6) | 2 | 2369135190 | |
| 66 | COUDE MALE | | 1/4' BSPP JIC 37 90° (6) | 2 | 2369132090 | |
| 68 | TE ÉGAL | | JIC 37 | 1 | 2369141180 | |
| 71 | TÉ TOURNANT RENVERSÉ | ROTATING CROSSTAIL | M.M.F.JIC37(16) | 2 | 2369154160 | |
| 72 | TÉ ÉGAL JIC | EQUAL T-PIECE JIC | 7/16 - 20 | 2 | 2369141060 | |
| 73 | TÉ ORIENTABLE RENVERSE | | (10) | 1 | 2369147010 | |
| 77 | FLEXIBLE | FLEXIBLE | SP.1707(H) 1,200M | 1 | 2369069170 | |
| 78 | FLEXIBLE | FLEXIBLE | SP.1707 1,300M | 1 | 2369069610 | |
| 79 | FLEXIBLE | FLEXIBLE | S5240 LG 2560 | 1 | 2369073690 | |
| 80 | FLEXIBLE | FLEXIBLE | DN6 D-D S1707 7,25M | 2 | 2369069680 | |
| 81 | FLEXIBLE | FLEXIBLE | S1707 8,9M | 2 | 2369069690 | |
| 82 | FLEXIBLE | FLEXIBLE | S1707 8,95M | 2 | 2369069700 | |

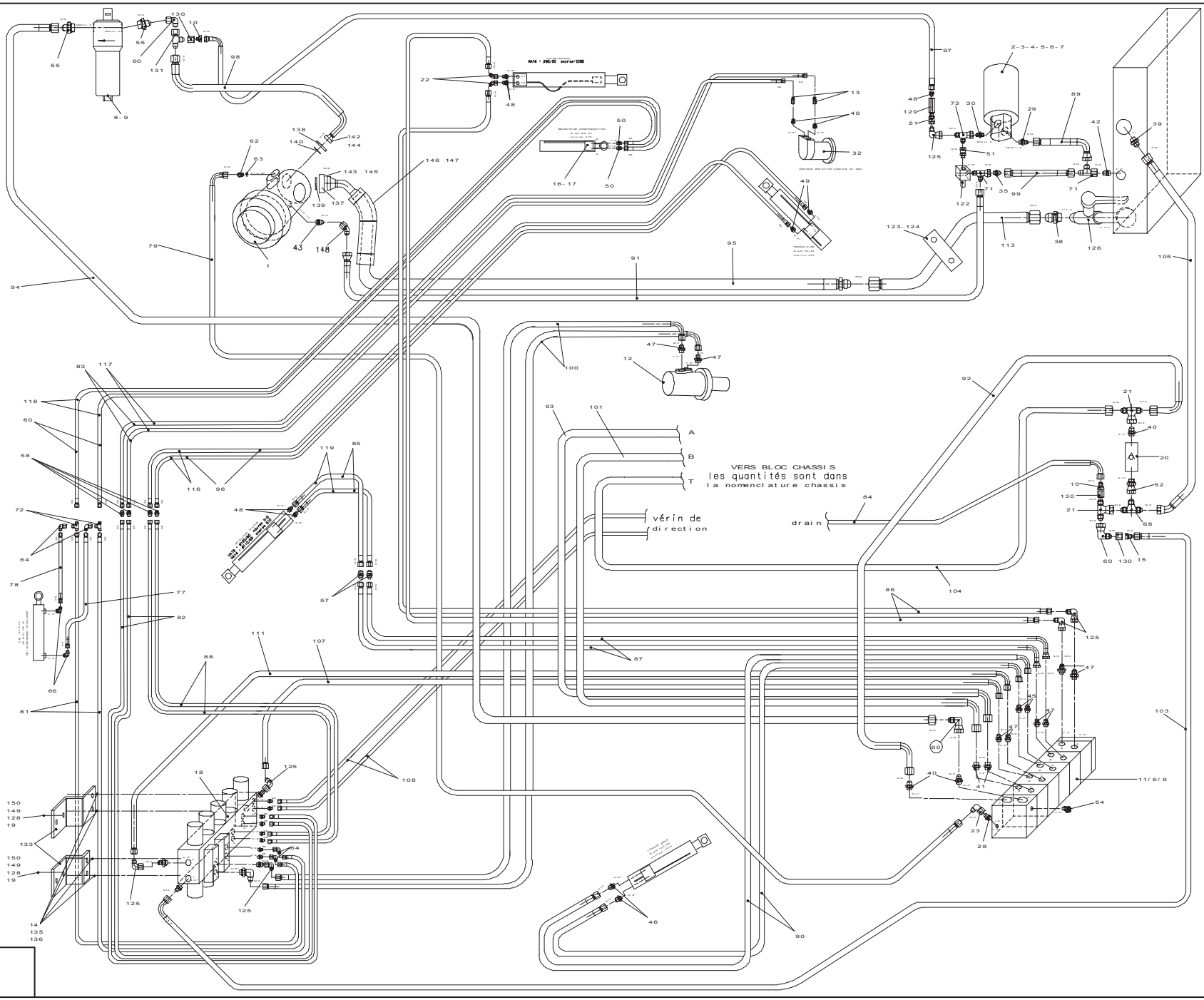
VERS BLOC CHASSIS
les quantités sont dans
la nomenclature chassis
A
B
T
vérin de
direction
drain

P23399 a

# HYDRAULIQUE TOURELLE
# TURRET HYDRAULIC INSTALLATION



| Rep. | Désignation | Designation | Specification | Qty | Code | Up to / jusqu'à |
|---|---|---|---|---|---|---|
| 83 | FLEXIBLE | FLEXIBLE | DN6 D-D S17LG 9700 | 2 | 2369074110 | |
| 85 | FLEXIBLE | FLEXIBLE | SP.1756(H) 2M | 2 | 2369059430 | |
| 86 | FLEXIBLE | FLEXIBLE | 3/8'-2SC-FF-LG8050 | 2 | 2369076080 | |
| 87 | FLEXIBLE | FLEXIBLE | LG 8500 S5250 | 2 | 2369073650 | |
| 88 | FLEXIBLE | FLEXIBLE | S1707 9,05M | 2 | 2369070040 | |
| 89 | FLEXIBLE | FLEXIBLE | LG 370 S5274 | 1 | 2369073640 | |
| 90 | FLEXIBLE | FLEXIBLE | DN12 D-C90 SP5240 | 2 | 2369073440 | |
| 91 | FLEXIBLE | FLEXIBLE | SP.5043 2,61M | 1 | 2369070120 | |
| 92 | FLEXIBLE | FLEXIBLE | LG 570 S5273 | 1 | 2369073610 | |
| 94 | FLEXIBLE | FLEXIBLE | SP 791 | 1 | 2369073350 | |
| 95 | FLEXIBLE | FLEXIBLE | S5469 | 1 | 2369075780 | |
| 96 | FLEXIBLE | FLEXIBLE | DN6 D-D S1707 LG8250 | 2 | 2369074120 | |
| 97 | FLEXIBLE | FLEXIBLE | LG 2985 S5250 | 1 | 2369073670 | |
| 98 | FLEXIBLE | FLEXIBLE | DN19 D-C90 S5469 LG485 | 1 | 2369075940 | |
| 99 | FLEXIBLE | FLEXIBLE | S5043 0,36M | 1 | 2369071290 | |
| 100 | FLEXIBLE | FLEXIBLE | DC90- DN10 - LG1140 | 2 | 2369073240 | |
| 103 | FLEXIBLE | FLEXIBLE | D-C90 1/2' LG 730 S5469 | 1 | 2369074420 | |
| 105 | FLEXIBLE | FLEXIBLE | LG 1400 S5380 | 1 | 2369074170 | |
| 107 | FLEXIBLE | FLEXIBLE | S5250 LG. 1100 | 1 | 2369072990 | |
| 111 | FLEXIBLE | FLEXIBLE | D-C90 S5469 LG 970 | 1 | 2369075450 | |
| 113 | RIGIDE | RIGID | | 1 | 179P200510 | |
| 122 | LIMITEUR DE PRESSION | PRESSURE LIMITER | | 1 | 2421203130 | |
| 123 | COLLIER SÉRIE STANDARD | CHAIN (STANDARD SERIES) | 538 -PP DP | 1 | 2389003760 | |
| 124 | VIS | SCREW | CHC M6X100-100 CL 8.8 ZB | 2 | 2308233880 | |
| 125 | COUDE ÉGAL | EVEN BEND | JIC 37 90° | 6 | 2369135210 | |
| 126 | ROBINET | VALVE | KHN VN G 1'1/2 - 2233 | 1 | 2421804270 | |

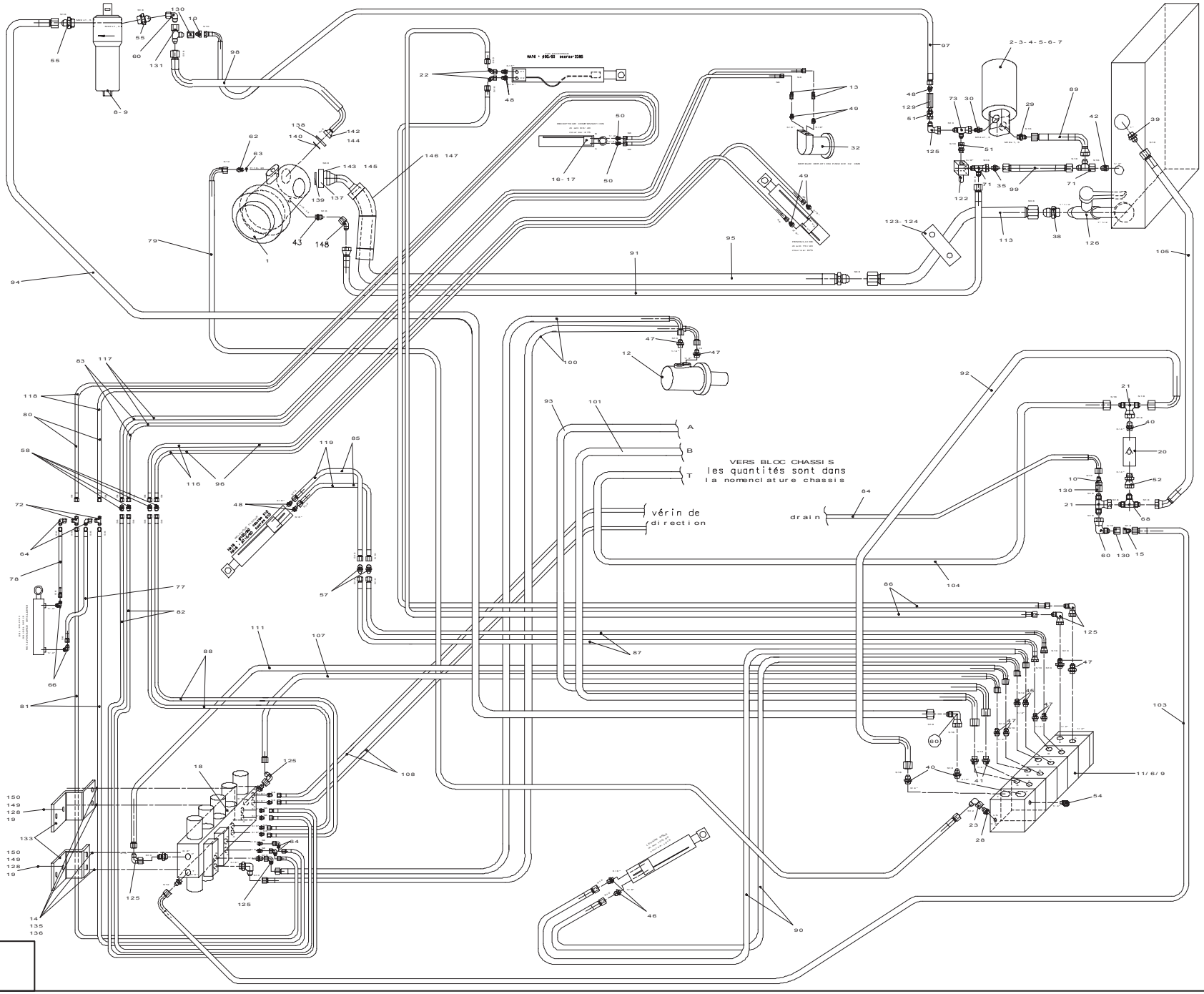
VERS BLOC CHASSIS
les quantités sont dans
la nomenclature chassis
A
B
T
vérin de
direction
drain

P23399 a

# HYDRAULIQUE TOURELLE
# TURRET HYDRAULIC INSTALLATION



| Rep. | Désignation | Designation | Specification | Qty | Code | Up to / jusqu'à |
|---|---|---|---|---|---|---|
| 128 | VIS | SCREW | H M5X25-25 CL.8.8 ZB | 2 | 2331231230 | |
| 129 | CLAPET ANTI-RETOUR | ONE-WAY VALVE | 3/8 | 1 | 2426602020 | |
| 130 | ECROU | NUT | F JIC37 (18) | 3 | 2369192180 | |
| 131 | TÉ TOURNANT RENVERSÉ | ROTATING CROSSTAIL | JIC 37 | 1 | 2369154200 | |
| 133 | SUPPORT | HOLDER | BLOC OIL - CONTROL | 2 | 179P208450 | |
| 135 | RONDELLE PLATE | FLAT WASHER | M 6 ZB | 4 | 2351112050 | |
| 136 | RONDELLE À DENTS | TOOTH LOCK WASHER | DEC 6 ZB | 4 | 2351301070 | |
| 137 | DEMI BRIDE | SEMI-FLANGE | SAE 3000 (CODE 61) 1'1/2 | 2 | 2420402770 | |
| 138 | DEMI BRIDE | SEMI-FLANGE | SAE 3000 (CODE 61) 1' | 2 | 2420402780 | |
| 139 | JOINT TORIQUE | O-RING | EMBOUT À BRIDE 1'1/2 | 1 | 2399004400 | |
| 140 | JOINT TORIQUE | O-RING | EMBOUT À BRIDE 1' | 1 | 2399004410 | |
| 142 | VIS | SCREW | H M10X30-30 CL.8.8 ZB | 4 | 2331231540 | |
| 143 | RONDELLE ÉLASTIQUE | RUBBER WASHER | W 12 ZB | 4 | 2351201100 | |
| 144 | RONDELLE ÉLASTIQUE | RUBBER WASHER | W 10 ZB | 4 | 2351201090 | |
| 145 | VIS | SCREW | H M12X35-35 CL.8.8 ZB | 4 | 2331231770 | |
| 146 | GAINE | SHEATH | Ø90 X 1900 | 1 | 2420703890 | |
| 147 | COLLIER | COLLAR | POLYAMIDE 6/6 4,6X360 | 3 | 2389002880 | |
| 148 | COUDE ORIENT. 135° JIC | ADJUSTABLE BEND 135° JIC | 7/8 - 14 | 1 | 2369136160 | |
| 149 | RONDELLE PLATE | FLAT WASHER | M 5 ZB | 2 | 2351112040 | |
| 150 | ECROU | NUT | H M5 CL. 8 ZB | 2 | 2341221040 | |
| | | | | | | |
| | | | | | | |
| | | | | | | |
| | | | | | | |
| | | | | | | |
| | | | | | | |

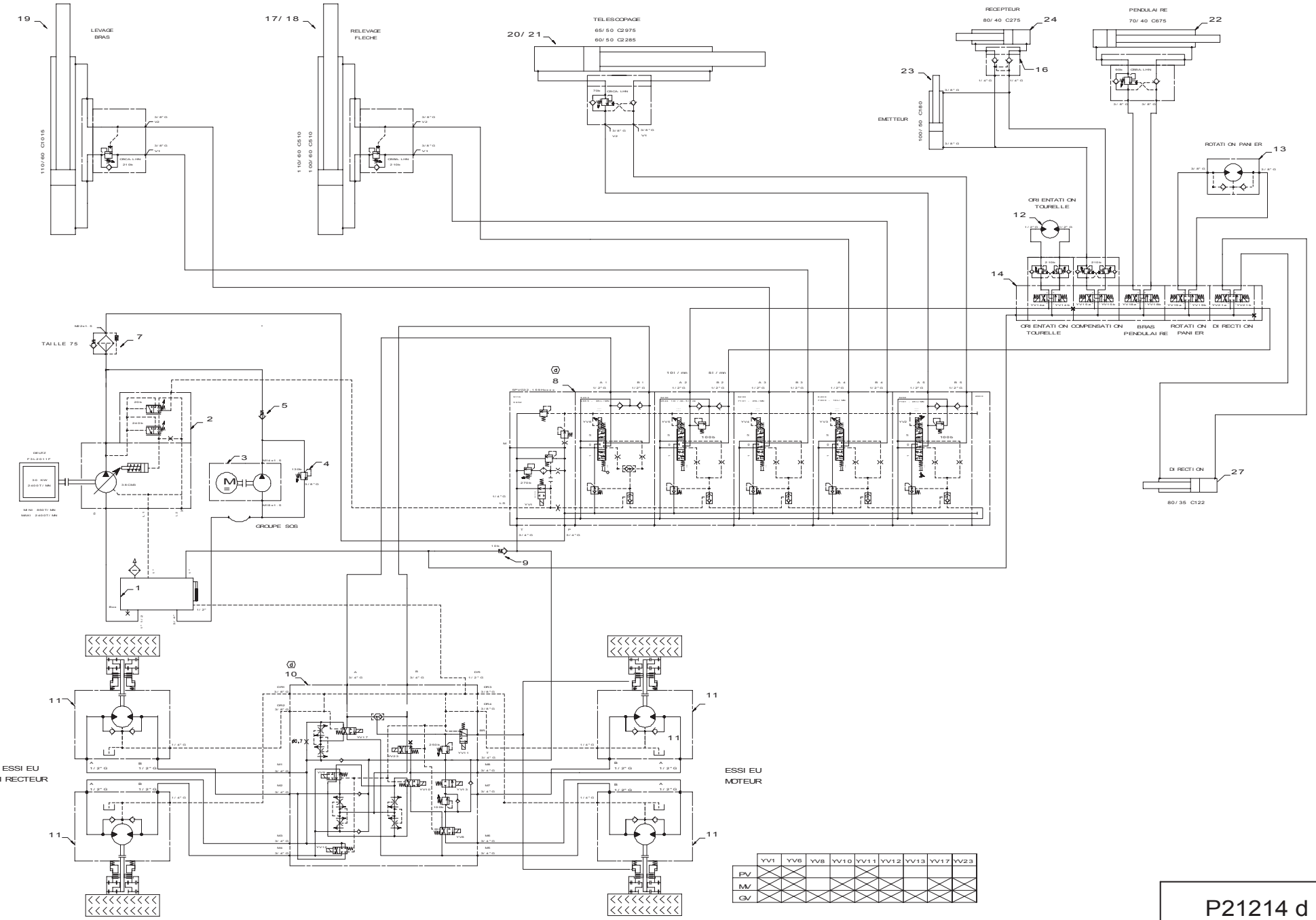
19
LEVAGE BRAS
110/60 C1015
17/ 18
RELEVAGE FLECHE
110/60 C510
100/60 C510
20/ 21
TELESCOPAGE
65/50 C2975
60/50 C2285
RECEPTEUR
80/40 C275
24
16
23
EMETTEUR
100/50 C1410
PENDULAIRE
70/40 C675
22
ROTATION PANIER
13
ORIENTATION TOURELLE
12
14
ORIENTATION TOURELLE
COMPENSATION
BRAS PENDULAIRE
ROTATION PANIER
DIRECTION
27
80/35 C122
TAILLE 75
7
2
5
3
4
DEUTZ
30 KW
2400T/MN
GROUPE SOS
8
9
1
10
11
ESSIEU DIRECTEUR
ESSIEU MOTEUR
YV1 YV6 YV8 YV10 YV11 YV12 YV13 YV17 YV23
PV
MV
GV
P21214 d

# SCHÉMA HYDRAULIQUE
# HYDRAULIC DIAGRAM

◀ B4 ▶

| Rep. | Désignation | Designation | Specification | Qty | Code | Up to / jusqu'à |
|---|---|---|---|---|---|---|
| 1 | ENSEMBLE RESERVOIR 100L | | | 1 | | |
| 2 | POMPE A PISTON LS 38CC | | S5660 | 1 | 2426210260 | |
| 3 | GROUPE DE SECOURS 1.3 Kw 3CC | | | 1 | 2440704140 | |
| 7 | FILTRE PRESSION 75 L/MN-10 MICRO | | S5520 | 1 | 2420602940 | |
| 8 | BLOC DE DISTRIBUTION PVG32 | | S5858 | 1 | 2503000490 | |
| 9 | CLAPET ANTI-RETOUR 10b | | S5594 | 1 | 2426602780 | |
| 10 | BLOC DE TRANSLATION | | S6062 | 1 | 2503000510 | |
| 11 | MOTEUR HYDRO DE TRANSLATION | | | 1 | 2431203160 | |
| 12 | MOTEUR HYDRO 160cc/tr | | | 1 | 2431203450 | |
| 13 | MOTEUR HYDRO 32CC | | | 1 | 2431203300 | |
| 14 | BLOC DE MOUVEMENT TOR | | S6053 | 1 | 2503000470 | |
| 16 | CLAPET ANTI RETOUR DOUBLE | | | 1 | 2426602180 | |
| 17 | VERIN LEVAGE FLECHE | | S5712 | 1 | 178C147460 | |
| 19 | VERIN LEVAGE BRAS | | S5711 | 1 | 178C147450 | |
| 20 | VERIN DE TELESCOPAGE | | S5712 | 1 | 178C211720 | |
| 22 | VERIN DE PENDULAIRE | | S5716 | 1 | 178C141930 | |
| 23 | VERIN EMETTEUR DE COMPENSATIO | | S5706 | 1 | 178C159120 | |
| 24 | VERIN RECEPTEUR DE COMPENSATI | | S5707 | 1 | 178C159130 | |
| | | | | | | |
| | | | | | | |
| | | | | | | |
| | | | | | | |
| | | | | | | |
| | | | | | | |
| | | | | | | |
| | | | | | | |

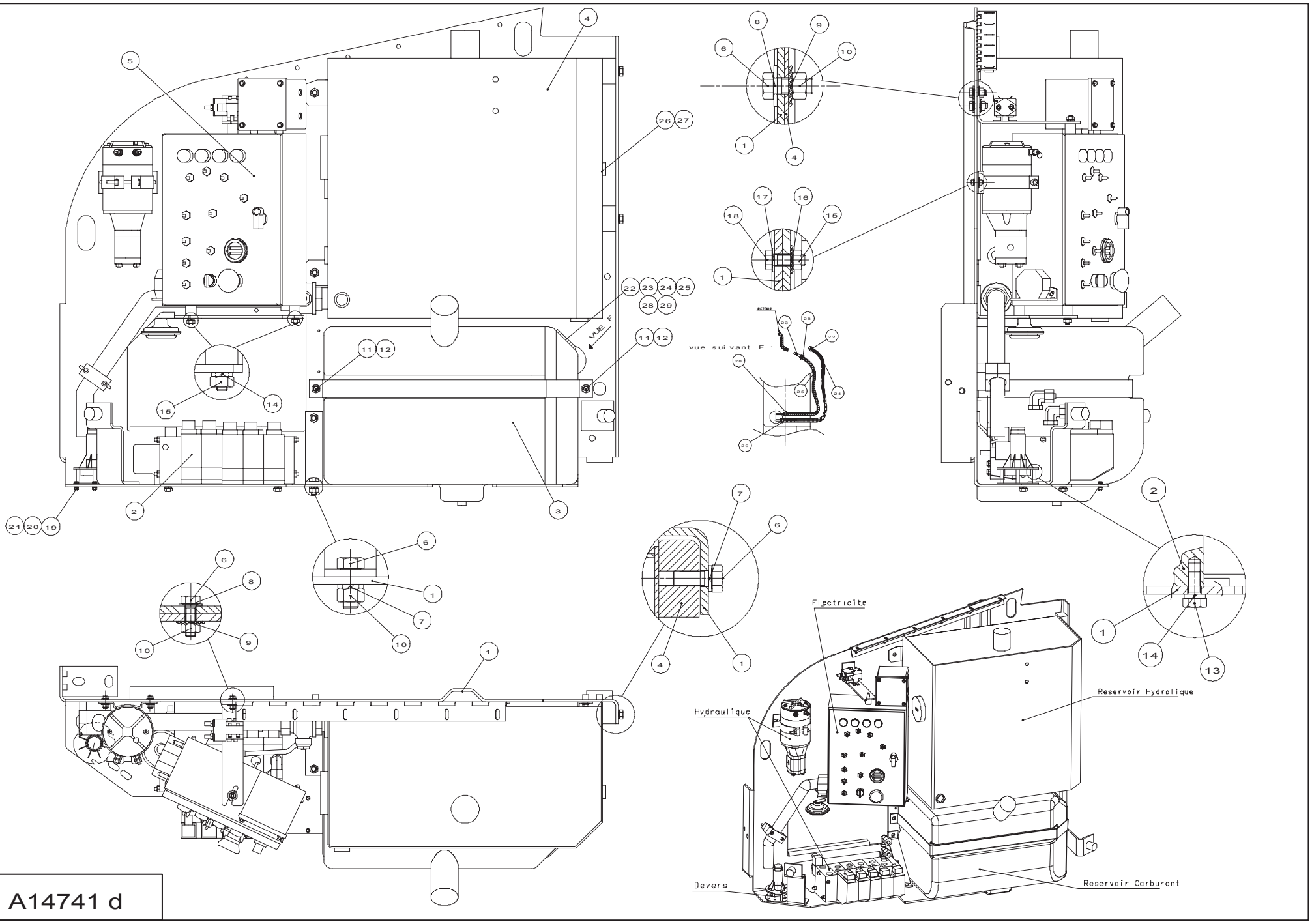
VUE F
vue suivant F :
RETOUR
Electricite
Hydraulique
Reservoir Hydrolique
Devers
Reservoir Carburant

A14741 d

# ▲ RÉSERVOIR HYDRAULIQUE
# HYDRAULIC RESERVOIR



| Rep. | Désignation | Designation | Specification | Qty | Code | Up to / jusqu'à |
|---|---|---|---|---|---|---|
| 4 | KIT RÉSERV. HYDRAULIQUE | HYDRAULIC RESERVOIR KIT | | 1 | 179B166650 | |
| | *RÉSERVOIR HYDRAULIQUE* | *HYDRAULIC RESERVOIR* | *75 LITRES* | *1* | *179A147000* | |
| | *NIVEAU* | *LEVEL* | | *1* | *2421401560* | |
| | *RENIFLARD* | *SNIFFER* | | *1* | *2421808670* | |
| | *VIS* | *SCREW* | *CHC M6 X 16/16 CL 8.8 ZB* | *12* | *2330002110* | |
| | *COUVERCLE* | *COVER* | | *1* | *179C169940* | |
| | *JOINT* | *SEAL* | *SUPÉRIEUR* | *1* | *179C156310* | |
| | *BOUCHON* | *PLUG* | *3/4 G* | *1* | *2420203470* | |
| | *RONDELLE PLATE* | *FLAT WASHER* | *L 6 ZB* | *1* | *2351123050* | |
| 6 | VIS | SCREW | H M12X30-30 CL.8.8 ZB | 4 | 2331231740 | |
| 7 | RONDELLE ÉLASTIQUE | RUBBER WASHER | W 12 ZB | 2 | 2351201100 | |
| 8 | RONDELLE PLATE | FLAT WASHER | M 12 ZB | 2 | 2351112110 | |
| 9 | RONDELLE À DENTS | TOOTH LOCK WASHER | DD 12 ZB | 2 | 2351303120 | |
| 10 | ECROU | NUT | H M12 CL. 8 ZB | 2 | 2341221090 | |
| 26 | THERMOCONTACTEUR | THERMAL SWITCH | TS 80 | 1 | 2442001090 | |
| 27 | JOINT CUIVRE | COPPER SEAL | 13,4 X 17 X 1,5 | 1 | 2396013060 | |
| | | | | | | |
| | | | | | | |
| | | | | | | |
| | | | | | | |
| | | | | | | |
| | | | | | | |
| | | | | | | |
| | | | | | | |
| | | | | | | |
| | | | | | | |

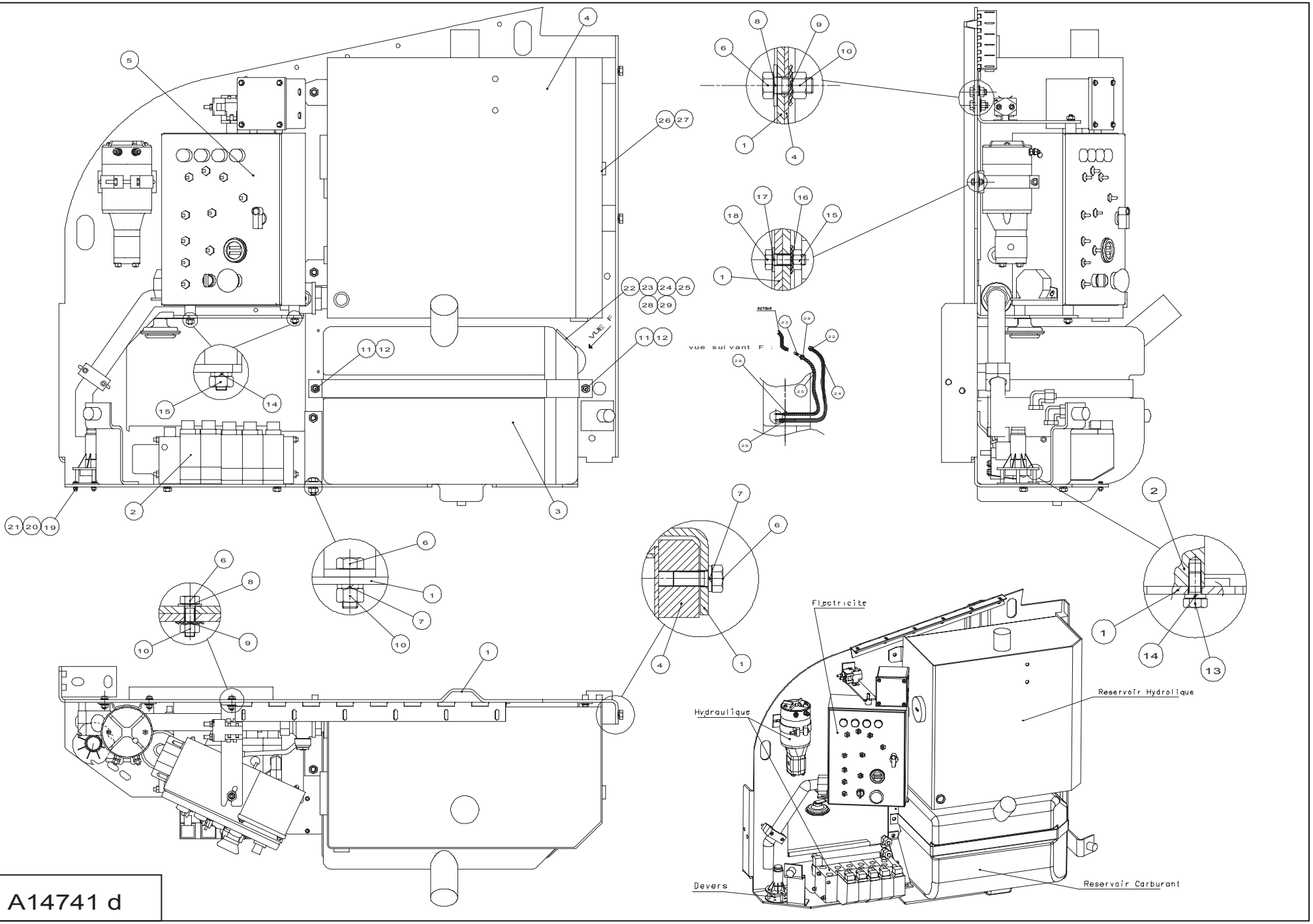
VUE F
vue suivant F :
RETOUR
Electricite
Hydraulique
Reservoir Hydrolique
Devers
Reservoir Carburant

A14741 d

# ▲ RÉSERVOIR DE CARBURANT
# FUEL TANK



| Rep. | Désignation | Designation | Specification | Qty | Code | Up to / jusqu'à |
|---|---|---|---|---|---|---|
| 3 | RÉSERVOIR DE CARBURANT | FUEL TANK | PLASTIQUE | 1 | 179B164520 | |
| | *CANNE DOUBLE* | *DOUBLE ROD* | | *1* | *2505000840* | |
| 11 | VIS | SCREW | H M10X25-25 CL.8.8 ZB | 2 | 2331231560 | |
| 12 | RONDELLE ÉLASTIQUE | RUBBER WASHER | W 10 ZB | 2 | 2351902930 | |
| 22 | COLLIER DE SERRAGE | TIGHTENING COLLAR | SANS ASPERITE DIAM15,3 | 1 | 2389003700 | |
| 23 | RACCORD CRANTÉ | NOTCHED CONNECTION | | 1 | 2421808190 | |
| 24 | TUYAU | PIPE | 10MM (ASPIRATION) | 1 | 2411902180 | |
| 25 | TUYAU | PIPE | 8MM (REFOULEMENT) | 1 | 2411902170 | |
| 28 | COLLIER DE SERRAGE | TIGHTENING COLLAR | SANS ASPÉRITÉ DIAM13,8 | 2 | 2389003690 | |
| 29 | COLLIER DE SERRAGE | TIGHTENING COLLAR | SANS ASPÉRITÉ DIAM16,6 | 1 | 2389003710 | |

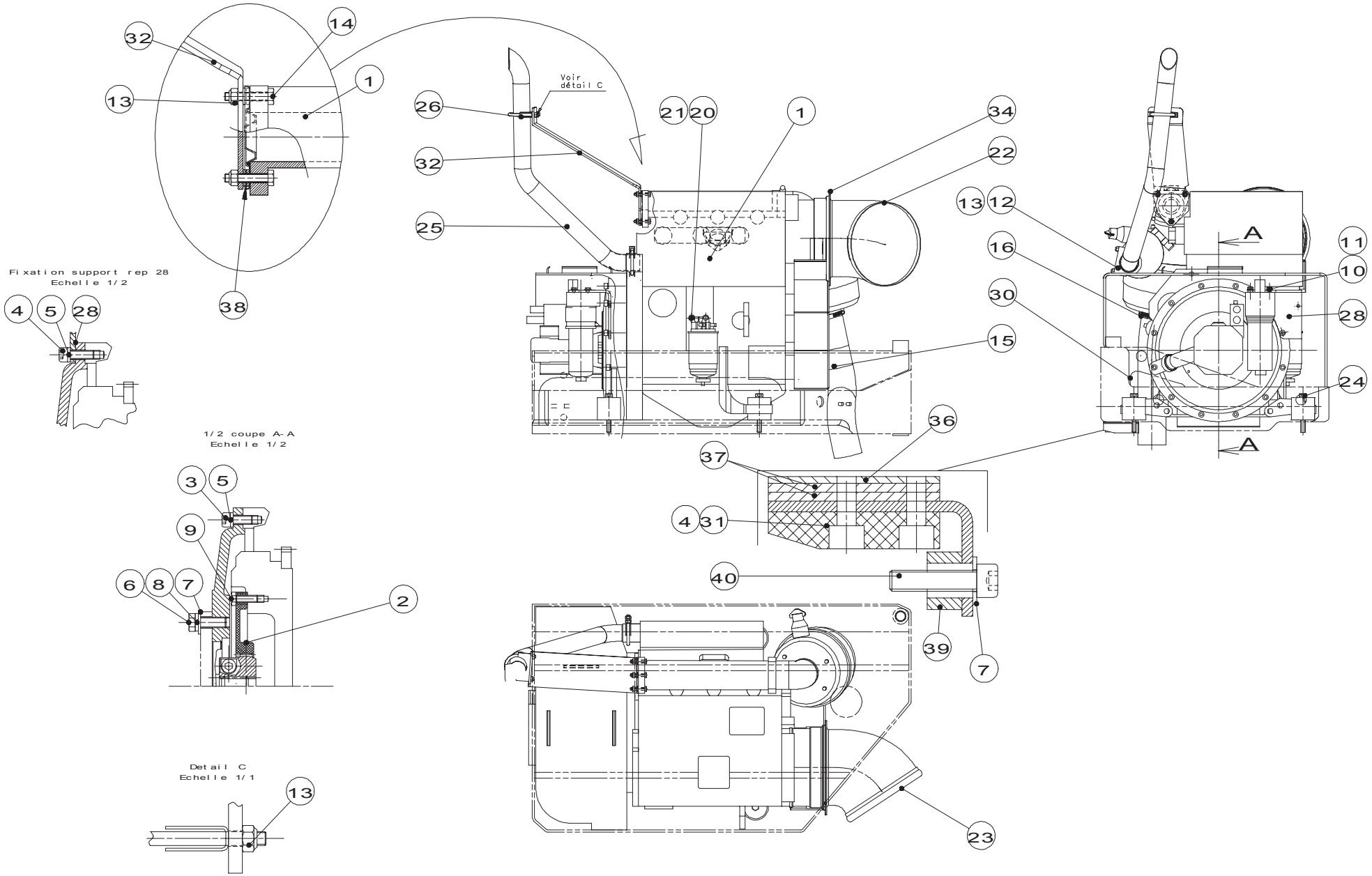
Voir détail C
Fixation support rep 28
Echelle 1/2
1/2 coupe A-A
Echelle 1/2
Detail C
Echelle 1/1
A
A

A14762 I

# ▲ GRP MOTEUR THERM.+POMPE
# THERMAL MOTOR UNIT + PUMP



| Rep. | Désignation | Designation | Specification | Qty | Code | Up to / jusqu'à |
|---|---|---|---|---|---|---|
| 1 | MOTEUR THERMIQUE | INTERNAL COMBUSION ENGINE | DEUTZ S5723 | 1 | 2431141410 | |
| | *VIS* | *SCREW* | | *1* | *2331231400* | |
| | *JOINT À ROTULE* | | | *1* | *2399003980* | |
| | *BAGUE ÉTANCHÉITÉ* | | | *1* | *2420214110* | |
| | *DÉMARREUR* | *STARTER* | | *1* | *8301180995* | |
| | *COURROIE SOUFFLANTE* | | | *1* | *8301179565* | |
| | *ALTERNATEUR* | *ALTERNATOR* | | *1* | *8301180648* | |
| | *COURONNE* | *RING* | | *1* | *8304272450* | |
| | *LEVIER* | *LEVER* | | *1* | *2421203320* | |
| | *TIGE FILETÉE* | *THREADED ROD* | | *1* | *2339004040* | |
| | *GOUPILLE SERRAGE* | | | *2* | *2352101120* | |
| | *BOUCHON DE VIDANGE* | *DRAINAGE PLUG* | *CARTER HUILE MOTEUR* | *1* | *2324000100* | |
| | *JOINT DE BOUCHON* | *PLUG SEAL* | *POUR 23240000100* | *1* | *2324000110* | |
| 2 | ACCOUPLEMENT MOTEUR-POMP | | BOWEX 48FLE-PA S5053 | 1 | 2420104540 | |
| 3 | VIS | SCREW | CHC M10X25-25 CL.8,8 ZB | 8 | 2308231890 | |
| 4 | VIS | SCREW | CHC M10X30-30 CL.8,8 ZB | 8 | 2308231900 | |
| 5 | RONDELLE ÉLASTIQUE | RUBBER WASHER | W 10 ZB | 12 | 2351902930 | |
| 7 | RONDELLE PLATE | FLAT WASHER | M 12 ZB | 3 | 2351112110 | |
| 8 | RONDELLE ÉLASTIQUE | RUBBER WASHER | W 12 ZB | 10 | 2351201100 | |
| 9 | VIS | SCREW | H M8X25-25 CL.8.8 ZB | 2 | 2331231430 | |
| 10 | VIS | SCREW | H M8X20-20 CL.8.8 ZB | 4 | 2331231420 | |
| 11 | RONDELLE ÉLASTIQUE | RUBBER WASHER | W 8 ZB | 4 | 2351201070 | |
| 12 | COLLIER DE SERRAGE | TIGHTENING COLLAR | Ø55-58 | 1 | 2389002380 | |
| 13 | ECROU AUTOFREINÉ MÉTAL | SELF-STOPPING METAL NUT | H M8 CL.8 ZB | 7 | 2349223260 | |
| 14 | VIS | SCREW | H M8X30-30 CL.8.8 ZB | 3 | 2331231440 | |
| 15 | GAINE SOUPLE | FLEXIBLE SHEATH | SPIRALÉE POUR FILTRE À | 1 | 152D164600 | |

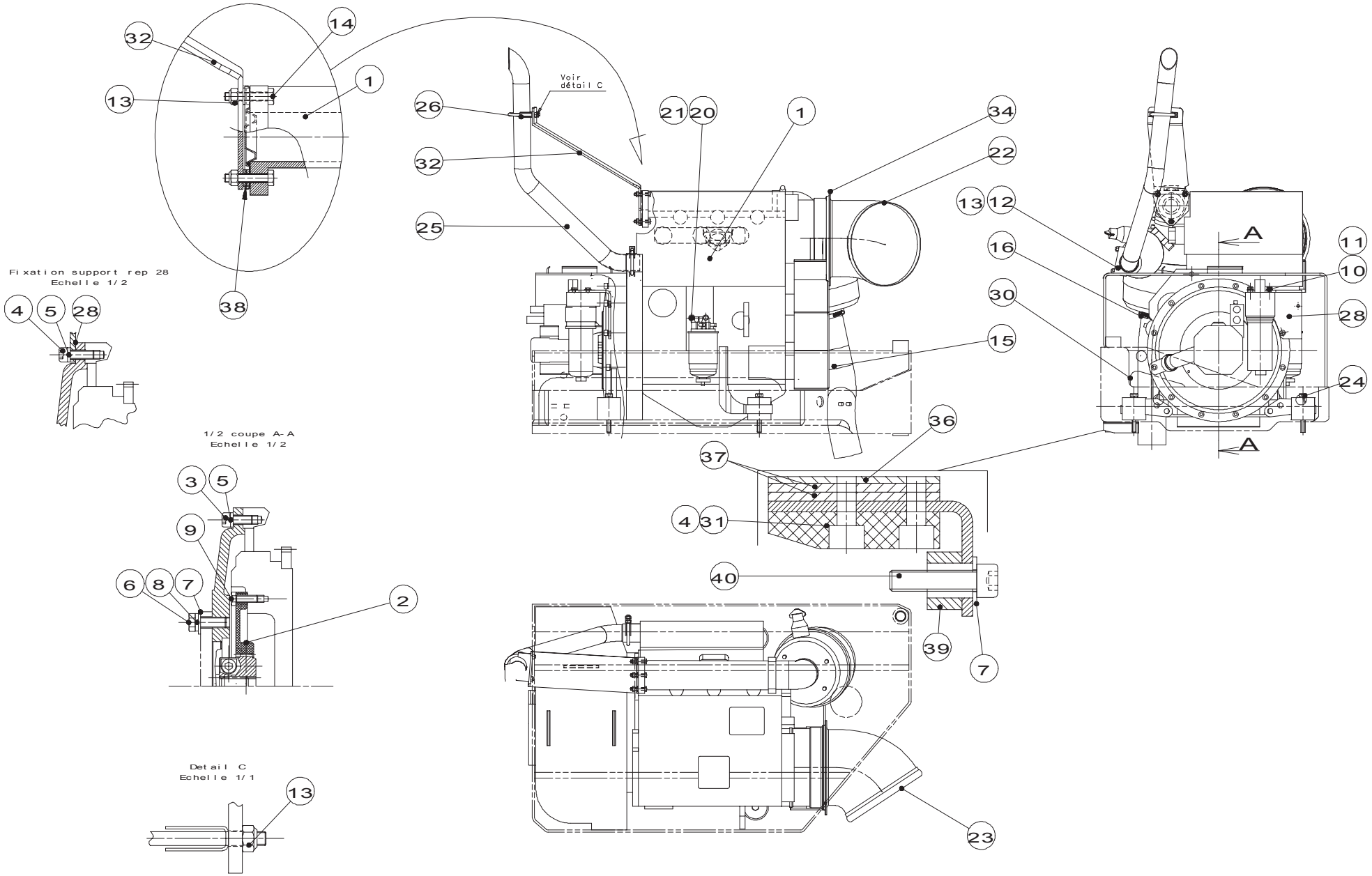
Voir détail C
Fixation support rep 28
Echelle 1/2
1/2 coupe A-A
Echelle 1/2
Detail C
Echelle 1/1
A
A

A14762 I

# ▲ GRP MOTEUR THERM.+POMPE
# THERMAL MOTOR UNIT + PUMP



| Rep. | Désignation | Designation | Specification | Qty | Code | Up to / jusqu'à |
|---|---|---|---|---|---|---|
| 16 | COLLIER DE SERRAGE | TIGHTENING COLLAR | SN 13/70-90 | 1 | 2389003580 | |
| 18 | VIS | SCREW | H M10X35-35 CL.8.8 ZB | 1 | 2301231770 | |
| 20 | VIS | SCREW | H M8X55-22 CL.8.8 ZB | 2 | 2301231700 | |
| 21 | RONDELLE À DENTS | TOOTH LOCK WASHER | DEC 8 ZB | 2 | 2351301090 | |
| 22 | GAINE | SHEATH | REFROIDISSEMENT | 1 | 179P200020 | |
| 23 | PROFILÉ | PROFILED SECTION | | 1 | 2399003450 | |
| 24 | VIS | SCREW | H M12X100-30 CL.8.8 ZB | 4 | 2301232050 | |
| 25 | TUYAU | PIPE | ECHAPPEMENT MOTEUR | 1 | 179P200010 | |
| 26 | COLLIER DE SERRAGE | TIGHTENING COLLAR | Ø50-55 | 1 | 2389002190 | |
| 28 | SUPPORT FILTRE À HUILE | OIL FILTER SUPPORT | | 1 | 179P209740 | |
| 29 | POMPE HYDRAULIQUE | HYDRAULIC PUMP | S 5660 | 1 | 2426210260 | |
| | *POCHETTE DE JOINTS* | *BAG OF SEALS* | | *1* | *2421694230* | |
| 30 | GALON NON FEUTRÉ | BRAID (NOT FELT) | DRAFTEX | 1 | 2420703390 | |
| 31 | PATIN SOUS SUPPORT MOTEU | PAD UNDER MOTOR SUPPORT | | 1 | 179P238180 | |
| 32 | SUPPORT | HOLDER | POT DEUTZ | 1 | 179P204260 | |
| 33 | RONDELLE À DENTS | TOOTH LOCK WASHER | DEC 12 ZB | 1 | 2351301120 | |
| 34 | COLLIER DE SERRAGE | TIGHTENING COLLAR | REF:12252393 TRANSFLEX | 1 | 2389003720 | |
| 36 | CALE | CHOCK | DE RÉGLAGE 1MM | 1 | 179P202250 | |
| 37 | CALE | CHOCK | DE RÉGLAGE 2MM | 1 | 179P202260 | |
| 38 | RONDELLE PLATE | FLAT WASHER | M 8 ZB | 6 | 2351112070 | |
| 39 | EQUERRE DE FIXATION | ANGLE BRACKET | BAC MOTEUR ROTATIF | 1 | 179P237930 | |
| 40 | VIS | SCREW | CHC M12X50-36 CL.8.8 ZB | 1 | 2338231150 | |
| | | | | | | |
| | | | | | | |
| | | | | | | |
| | | | | | | |

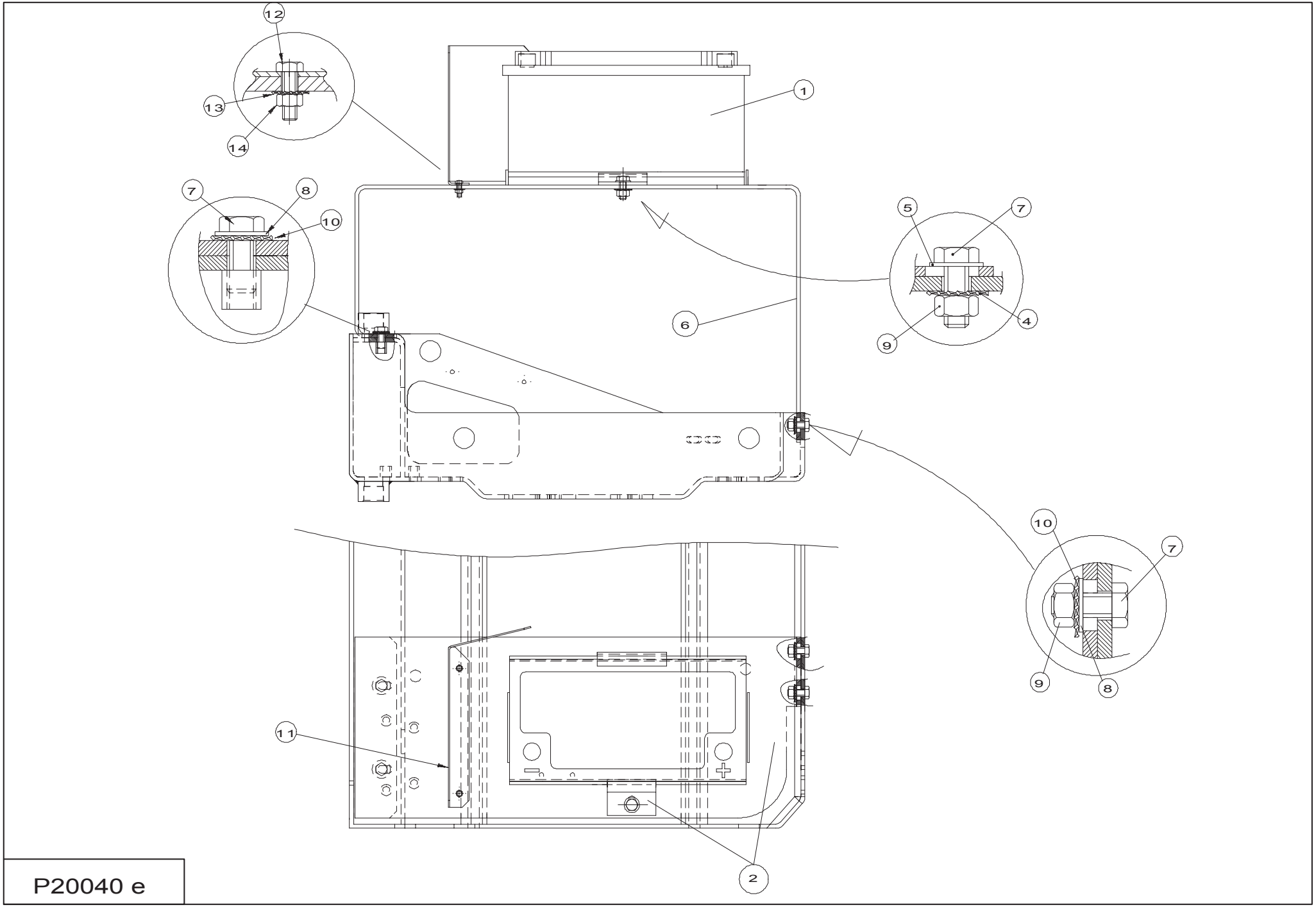


P20040 e

# ▲ BATTERIE DE DÉMARRAGE
# STARTING BATTERY



| Rep. | Désignation | Designation | Specification | Qty | Code | Up to / jusqu'à |
|---|---|---|---|---|---|---|
| 1 | BATTERIE | BATTERY | 12V 760A 100 AH | 1 | 2901000140 | |
| 2 | PATTE DE FIXATION | RETAINING BRACKET | | 1 | 178D158980 | |
| 6 | SUPPORT BATTERIE | BATTERY SUPPORT | | 1 | 179P225100 | |
| 7 | VIS | SCREW | H M10X25-25 CL.8.8 ZB | 5 | 2331231560 | |
| 8,5 | RONDELLE PLATE | FLAT WASHER | M 10 ZB | 6 | 2351112090 | |
| 9 | ECROU | NUT | H M10 CL. 8 ZB | 3 | 2341221080 | |
| 10,4 | RONDELLE À DENTS | TOOTH LOCK WASHER | DEC 10 ZB | 6 | 2351301110 | |
| 11 | DÉFLECTEUR | BAFFLE PLATE | | 1 | 179P201490 | |
| 12 | VIS | SCREW | H M6X20-20 CL.8.8 ZB | 2 | 2331231330 | |
| 13 | RONDELLE À DENTS | TOOTH LOCK WASHER | DEC 6 ZB | 2 | 2351301070 | |
| 14 | ECROU | NUT | H M6 CL. 8 ZB | 2 | 2341221050 | |

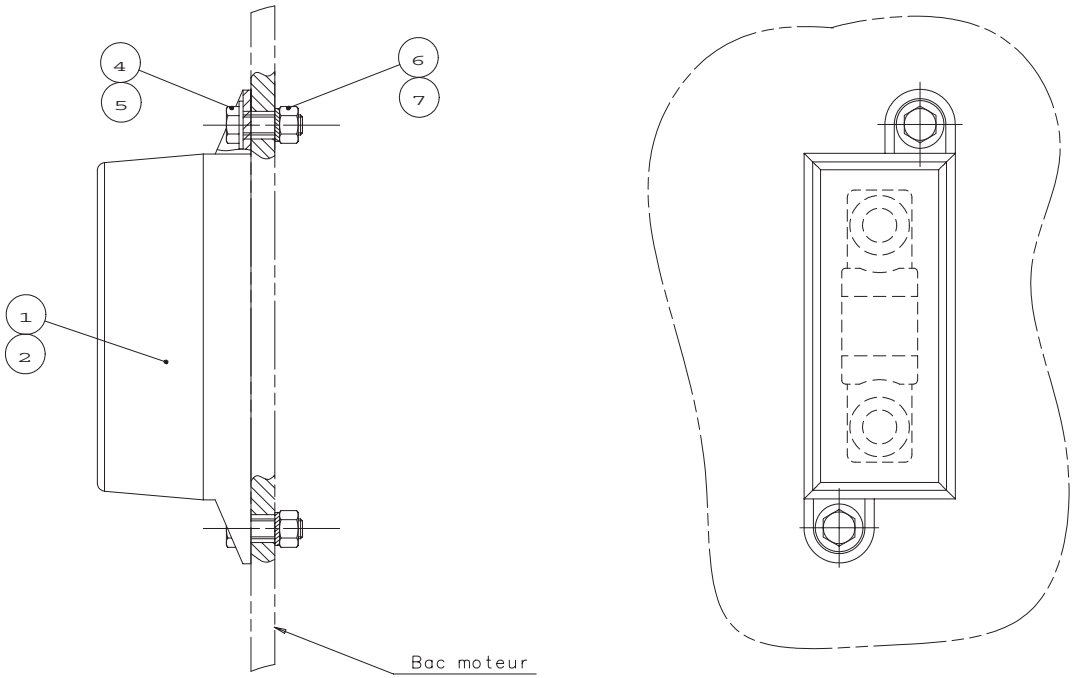


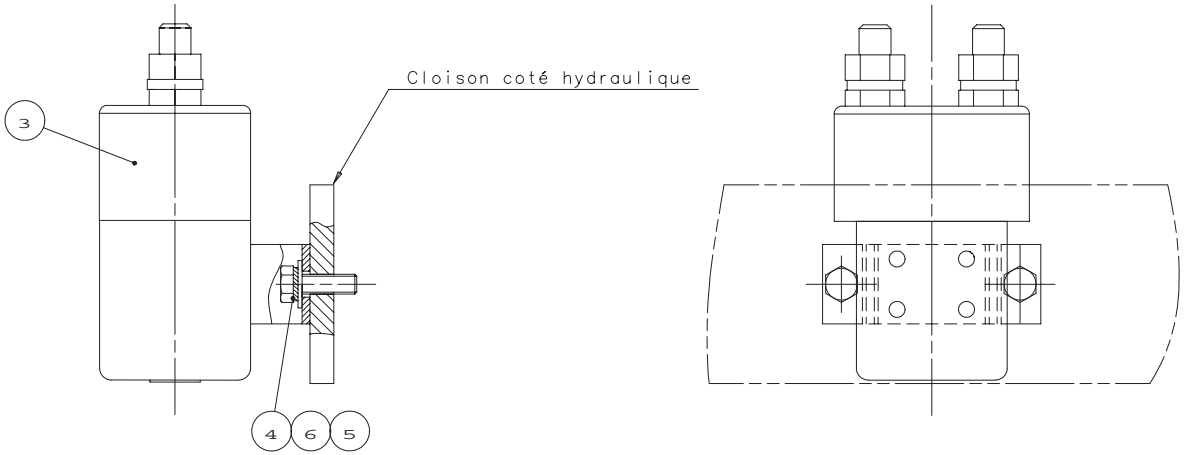


P20274 a

# ▲ MONT. CONTACT. ÉLECTROP.
# ELECTRIC PUMP CONTACT SWITCH FITTING



| Rep. | Désignation | Designation | Specification | Qty | Code | Up to / jusqu'à |
|---|---|---|---|---|---|---|
| 1 | PORTE FUSIBLE | FUSE HOLDER | MEGA FUSE | 1 | 2441608140 | |
| 2 | FUSIBLE | FUSE | MEGA FUSE 250 AMP | 1 | 2440602480 | |
| 3 | CONTACTEUR | CONTACTOR | SW80-35 12V | 1 | 2440318650 | |
| 4 | VIS | SCREW | H M5X16-16 CL.8.8 ZB | 4 | 2331231210 | |
| 5 | RONDELLE PLATE | FLAT WASHER | M 5 ZB | 4 | 2351112040 | |
| 6 | RONDELLE À DENTS | TOOTH LOCK WASHER | DEC 5 ZB | 4 | 2351301060 | |
| 7 | ECROU | NUT | H M5 CL. 8 ZB | 2 | 2341221040 | |

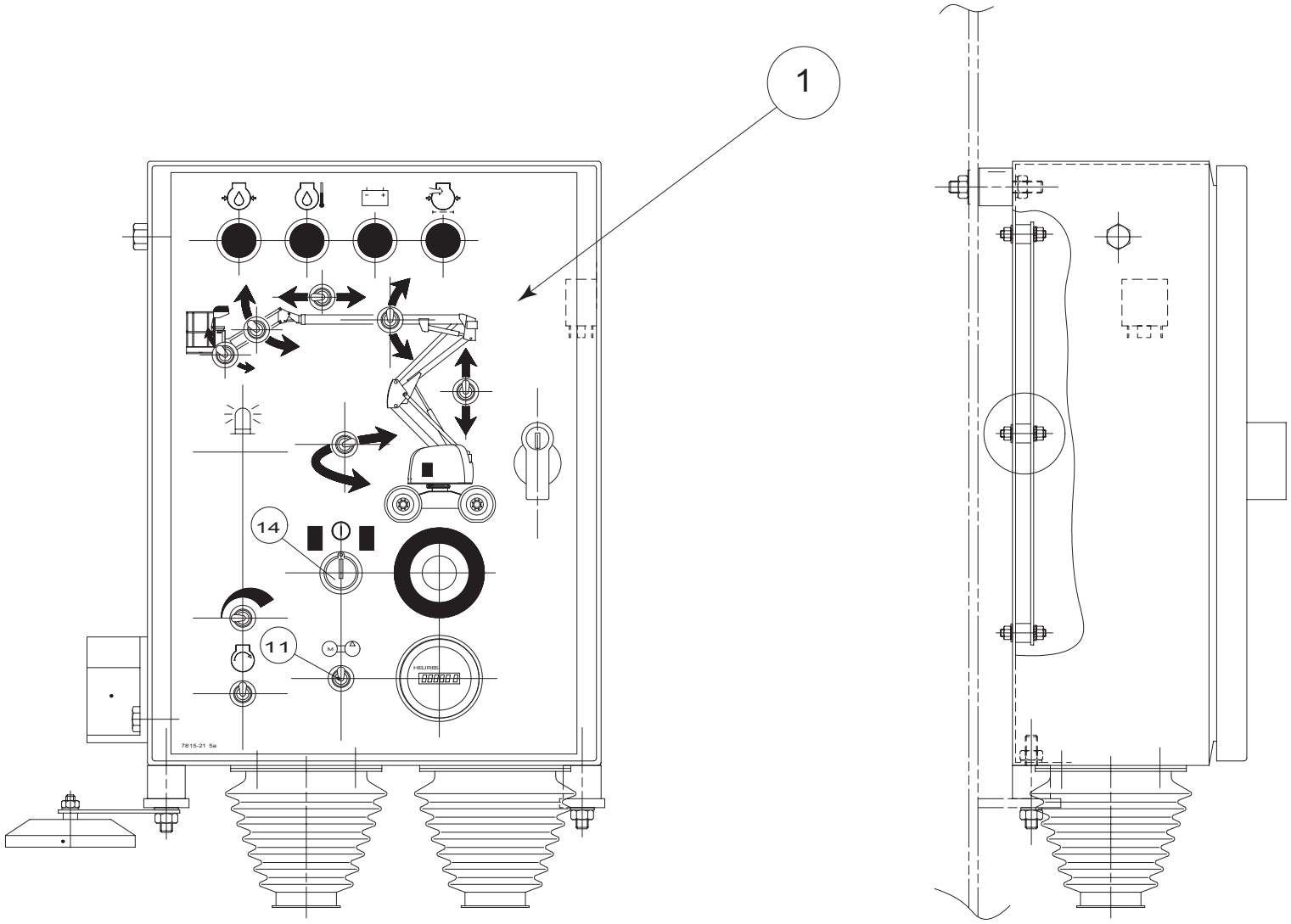


Coffret tourelle HA16SPX

# ELECTRICITÉ TOURELLE
# TURNTABLE ELECTRICITY



| Rep. | Désignation | Designation | Specification | Qty | Code | Up to / jusqu'à |
|---|---|---|---|---|---|---|
| 1 | COFFRET TOURELLE | TURNTABLE BOX | TOURELLE DE BASE 4X4X4 | 1 | 180P244800 | |

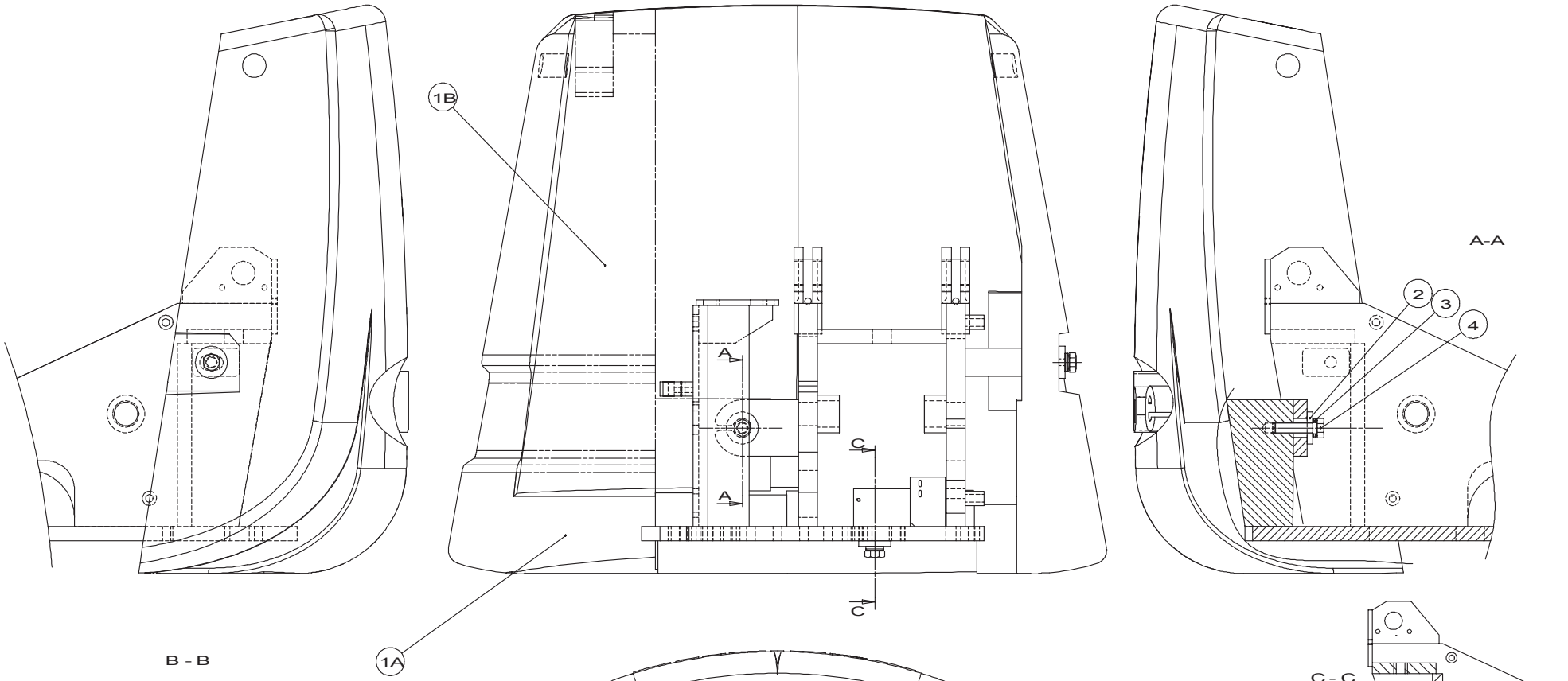


A14808

# ▲ CONTREPOIDS
# COUNTERWEIGHT



| Rep. | Désignation | Designation | Specification | Qty | Code | Up to / jusqu'à |
|---|---|---|---|---|---|---|
| 1 | CONTREPOIDS | COUNTERWEIGHT | 1400KG | 1 | 179A147080 | |
| 2 | RONDELLE | WASHER | Ø25/68 12 | 3 | 178D158570 | |
| 3 | RONDELLE | WASHER | TREP 4L Ø24 ZB | 3 | 2351901310 | |
| 4 | VIS | SCREW | H M24X90-54 CL.8.8 ZB | 2 | 2301233210 | |
| 5 | VIS | SCREW | H M24X130-60 CL.8.8 ZB | 1 | 2331232830 | |

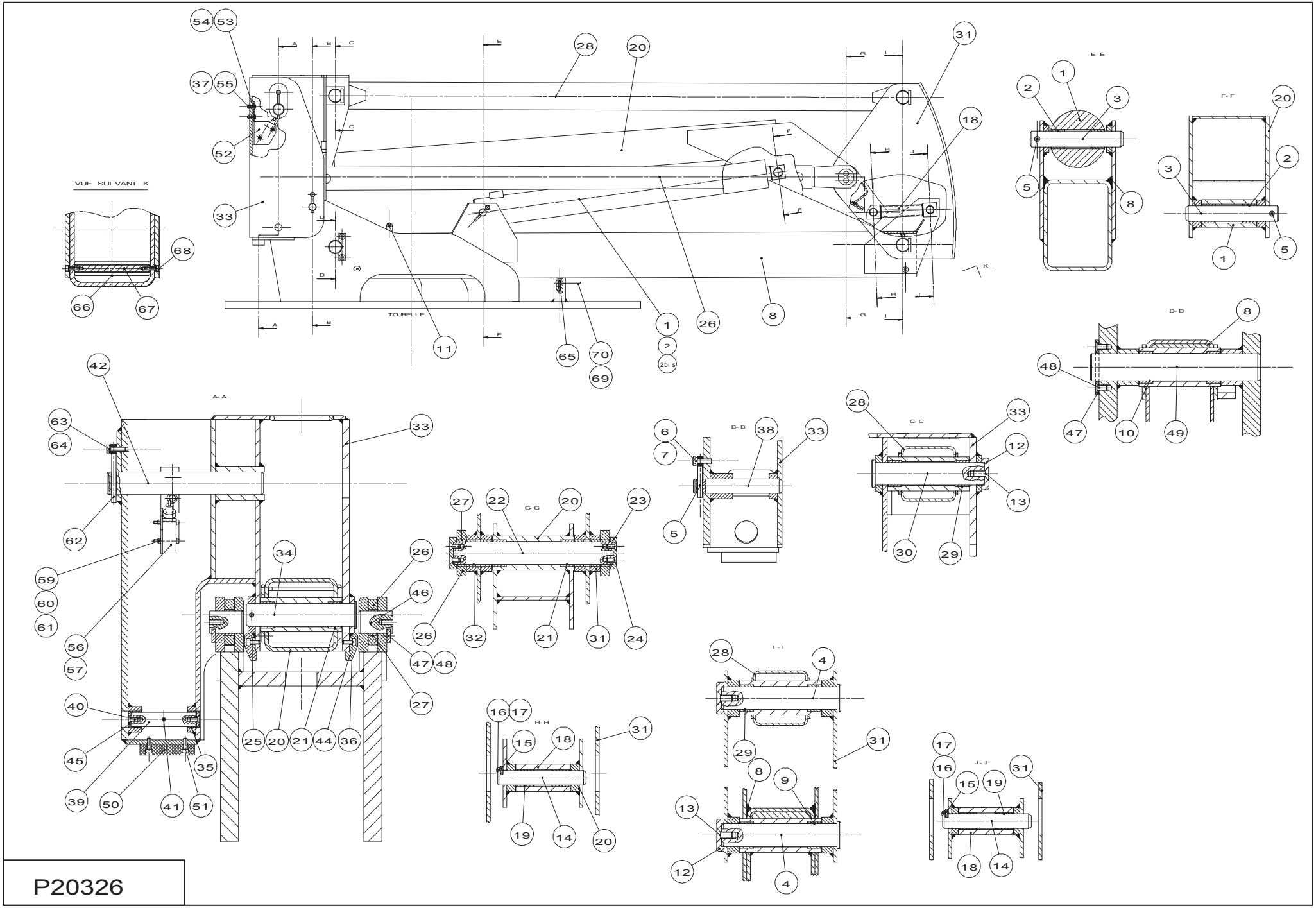


P20326

# ▲ BRAS ARTICULÉS
# SWIVEL ARMS



| Rep. | Désignation | Designation | Specification | Qty | Code | Up to / jusqu'à |
|---|---|---|---|---|---|---|
| | CHAPE MÂLE LISSE | SMOOTH MALE SLOT | (PIECE PROVISOIRE) | 1 | 178D161190 | |
| 1 | VÉRIN DE LEVAGE BRAS | ARM LIFT CYLINDER | | 1 | 178C147450 | |
| | *POCHETTE DE JOINTS* | *BAG OF SEALS* | | *1* | *2421692690* | |
| | *PISTON* | *PISTON* | | *1* | *2421609930* | |
| | *BAGUE* | *RING* | *S5717* | *4* | *2390190800* | |
| | *CARTOUCHE D'ÉQUILIBRAGE* | *BALANCE CARTRIDGE* | *CBCA-LHN* | *1* | *2427007030* | |
| 3 | AXE D'ARTICULATION | BOLT | VERIN LEVAGE BRAS/ | 2 | 178C142150 | |
| 4 | AXE D'ARTICULATION BRAS | ARM HINGE PIN | BAS | 2 | 178C142160 | |
| 5 | CHAPE MÂLE LISSE | SMOOTH MALE SLOT | | 3 | 132D154320 | |
| 6 | VIS | SCREW | H M10X35-35 CL.8.8 ZB | 3 | 2301231770 | |
| 7 | RONDELLE ÉLASTIQUE | RUBBER WASHER | W 10 ZB | 3 | 2351902930 | |
| 8 | BRAS BAS | BOTTOM ARM | | 1 | 138P211740 | |
| | *BAGUE* | *RING* | *S5717* | *2* | *2390190830* | |
| | *BAGUE* | *RING* | *REF:607030* | *2* | *2390190840* | |
| | *COLLIER* | *COLLAR* | *SP 320/20 PP GD AS* | *2* | *2389002390* | |
| 12 | RONDELLE DE BUTÉE | THRUST WASHER | | 3 | 116D148250 | |
| 13 | VIS | SCREW | FHC M14X35-35 CL.10.9 DC | 3 | 2337331010 | |
| 14 | AXE D'ARTICULATION | BOLT | AXE ARTICULATION BRAS | 2 | 178C142140 | |
| 15 | PLAQUETTE ARRÊT D'AXE | PIN STOP PLATE | | 2 | 178D158330 | |
| 16 | VIS | SCREW | CHC M6X25-25 CL.8,8 ZB | 4 | 2308231500 | |
| 17 | RONDELLE ÉLASTIQUE | RUBBER WASHER | W 6 ZB | 4 | 2351201050 | |
| 18 | BIELLE | CONNECTING ROD | COMPRENANT | 1 | 178C142120 | |
| | *BAGUE* | *RING* | *PM 3240 DX* | *4* | *2390150460* | |
| 20 | BRAS HAUT | TOP ARM | COMPRENANT | 1 | 178A142130 | |
| | *BAGUE* | *RING* | *S5717* | *4* | *2390190830* | |
| 22 | AXE D'ARTICULATION BRAS | ARM HINGE PIN | HAUT | 1 | 178C142180 | |

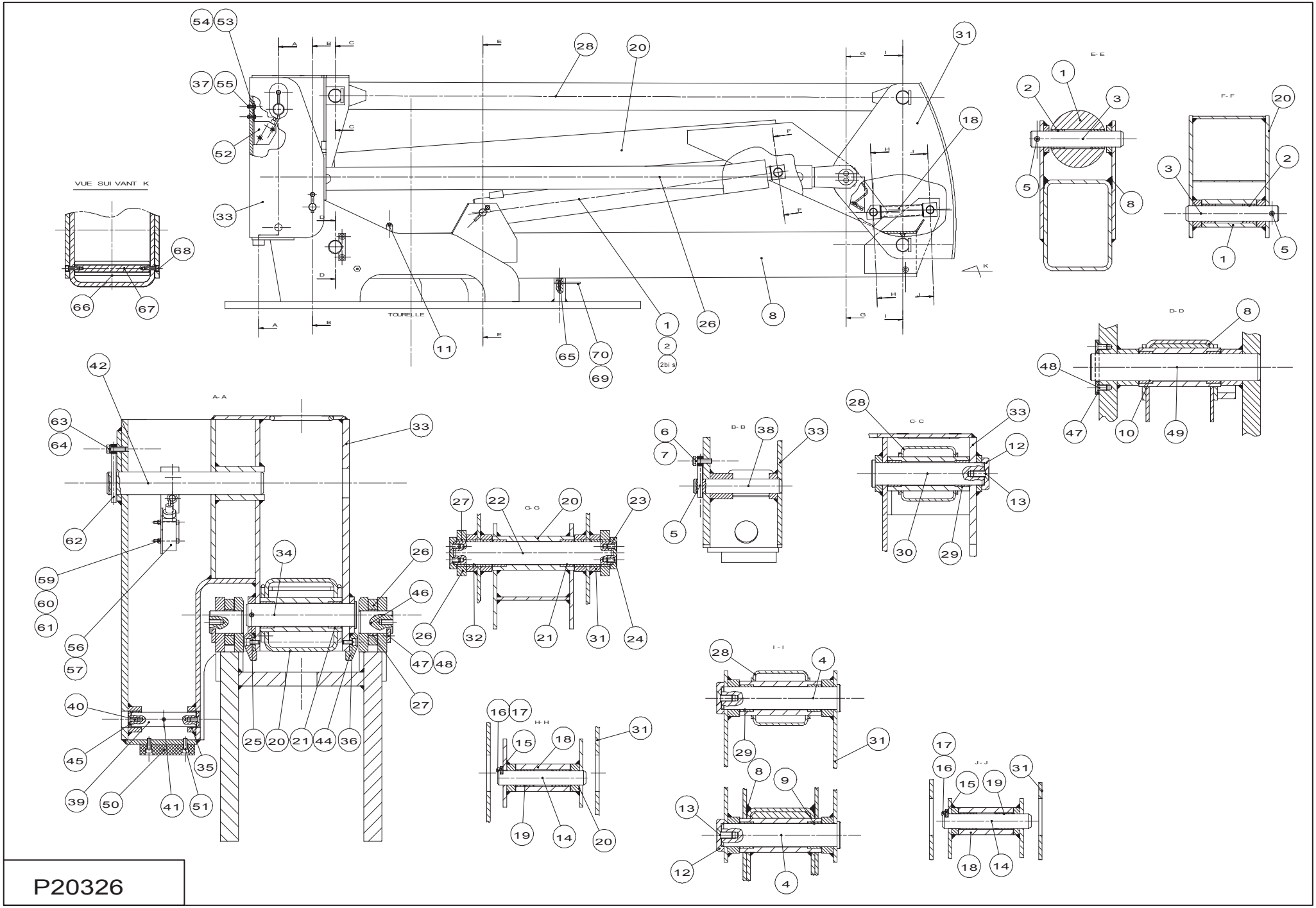


P20326

# ▲ BRAS ARTICULÉS
# SWIVEL ARMS



| Rep. | Désignation | Designation | Specification | Qty | Code | Up to / jusqu'à |
|---|---|---|---|---|---|---|
| 23 | BUTÉE | STOP | | 2 | 116D147270 | |
| 24 | VIS | SCREW | FHC M10X20-20 CL.10.9 DC | 4 | 2337331070 | |
| 25 | GOUPILLE ÉLASTIQUE | FLEXIBLE PIN | E 10-100 | 1 | 2352212820 | |
| 26 | TIRANT BAS | BOTTOM TIE ROD | COMPRENANT | 2 | 178A142150 | |
| | *BAGUE* | *RING* | *S5717* | *2* | *2390190820* | |
| | *BAGUE* | *RING* | *S5717* | *4* | *2390190830* | |
| 28 | TIRANT HAUT | TOP TIE ROD | COMPRENANT | 1 | 178A142160 | |
| | *BAGUE* | *RING* | *S5717* | *4* | *2390190830* | |
| 30 | AXE D'ARTICULATION | BOLT | AXE ARTICULATION | 1 | 178C142200 | |
| 31 | SUPPORT | HOLDER | SUPPORT INTERMEDIAIRE | 1 | 178A142170 | |
| *32* | *BAGUE* | *RING* | *S5717* | *2* | *2390190820* | |
| 33 | SUPPORT DE FLÈCHE | BOOM SUPPORT | | 1 | 178A142190 | |
| *34* | *AXE ARTICULATION* | *HINGE PIN* | | *1* | *178C142190* | |
| *35* | *BAGUE* | *RING* | *PM 3220 DX* | *2* | *2390150770* | |
| 36 | VIS | SCREW | CHC M8X20-20 CL.8,8 ZB | 4 | 2308231690 | |
| 37 | RONDELLE À DENTS | TOOTH LOCK WASHER | DEC 8 ZB | 2 | 2351301090 | |
| 38 | AXE DE VÉRIN | CYLINDER AXIS | | 1 | 178C142220 | |
| 39 | AXE PIED DE VÉRIN | CYLINDER FOOT PIN | | 1 | 178C142230 | |
| 40 | VIS | SCREW | FHC M8X20-20 CL.10.9 DC | 2 | 2337331040 | |
| 41 | GOUPILLE ÉLASTIQUE | FLEXIBLE PIN | E 8-65 | 1 | 2352290020 | |
| 42 | AXE D'ARTICULATION | BOLT | | 1 | 178C142390 | |
| 42 | AXE ARTICULATION | HINGE PIN | | 1 | 178C154340 | |
| 44 | BUTÉE CENTREUSE | CENTRING STOP | | 2 | 178C142330 | |
| 45 | RONDELLE D'ARRÊT | STOP WASHER | Ø34 EP.5 | 2 | 178D158400 | |
| 46 | AXE TIRANT BAS/TOURELLE | TURRET/BOTTOM TIE ROD PIN | | 2 | 178C142380 | |

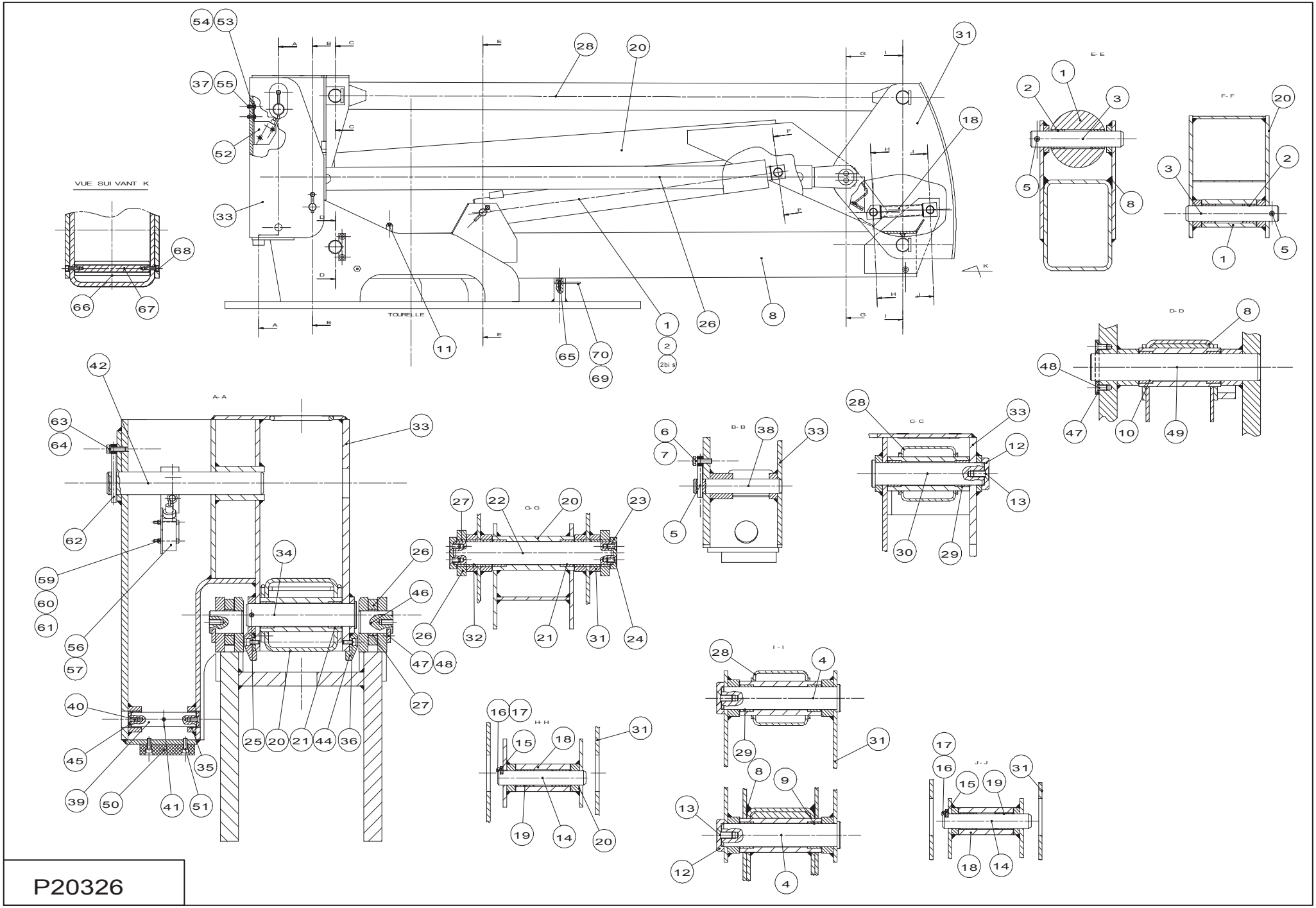


P20326

# ▲ BRAS ARTICULÉS
# SWIVEL ARMS



| Rep. | Désignation | Designation | Specification | Qty | Code | Up to / jusqu'à |
|---|---|---|---|---|---|---|
| 47 | ARRÊT D'AXE | PIN STOP | | 3 | 178C142400 | |
| 48 | VIS | SCREW | FHC M12X25-25 CL.10.9 DC | 6 | 2307332110 | |
| 49 | AXE BRAS BAS / TOURELLE | TURRET/BOTTOM ARM PIN | | 1 | 178C142420 | |
| 50 | BUTÉE | STOP | BUTEE SUPPORT FLECHE | 1 | 178C142350 | |
| 51 | VIS | SCREW | CHC M8X25-25 CL.8,8 ZB | 2 | 2308231700 | |
| 52 | SUPPORT | HOLDER | SUPPORT CONTACTEUR | 1 | 178C142340 | |
| 53 | VIS | SCREW | H M8X30-30 CL.8.8 ZB | 2 | 2331231440 | |
| 54 | RONDELLE PLATE | FLAT WASHER | L 8 ZB | 2 | 2351113070 | |
| 55 | ECROU | NUT | H M8 CL. 8 ZB | 2 | 2341221070 | |
| 56 | PRESSE-ÉTOUPE RÉDUCTEUR | REDUCER PACKING BOX | 13/7 | 1 | 2441613010 | |
| 57 | INTERRUPTEUR POSITION | POSITION SWITCH | | 1 | 2440901520 | |
| 59 | VIS | SCREW | CHC M5X50-22 CL.8,8 ZB | 2 | 2308231380 | |
| 60 | RONDELLE PLATE | FLAT WASHER | M 5 ZB | 4 | 2351112040 | |
| 61 | ECROU AUTOFREINÉ | SELF-LOCKED NUT | H FR M5 CL. 8 ZB | 2 | 2349222240 | |
| 62 | CHAPE MÂLE LISSE | SMOOTH MALE SLOT | Ø12 LG 80 | 1 | 178D161200 | |
| 63 | VIS | SCREW | H M12X40-30 CL8.8 ZB | 1 | 2301231940 | |
| 64 | RONDELLE ÉLASTIQUE | RUBBER WASHER | W 12 ZB | 1 | 2351201100 | |
| 65 | VIS | SCREW | CHC M8X35-35 CL.8,8 ZB | 2 | 2308231720 | |
| 66 | ROULEAU | ROLLER | | 1 | 178A165100 | |
| 67 | AXE | PIN | | 1 | 178A165090 | |
| 68 | VIS | SCREW | CHC M5X20-20 CL8.8 ZB | 1 | 2308231320 | |
| 69 | PLAT SUPPORT | SUPPORT FLAT | | 1 | 137P201950 | |
| 70 | BUTÉE | STOP | BRAS BAS | 1 | 137P202620 | |
| | | | | | | |
| | | | | | | |
| | | | | | | |

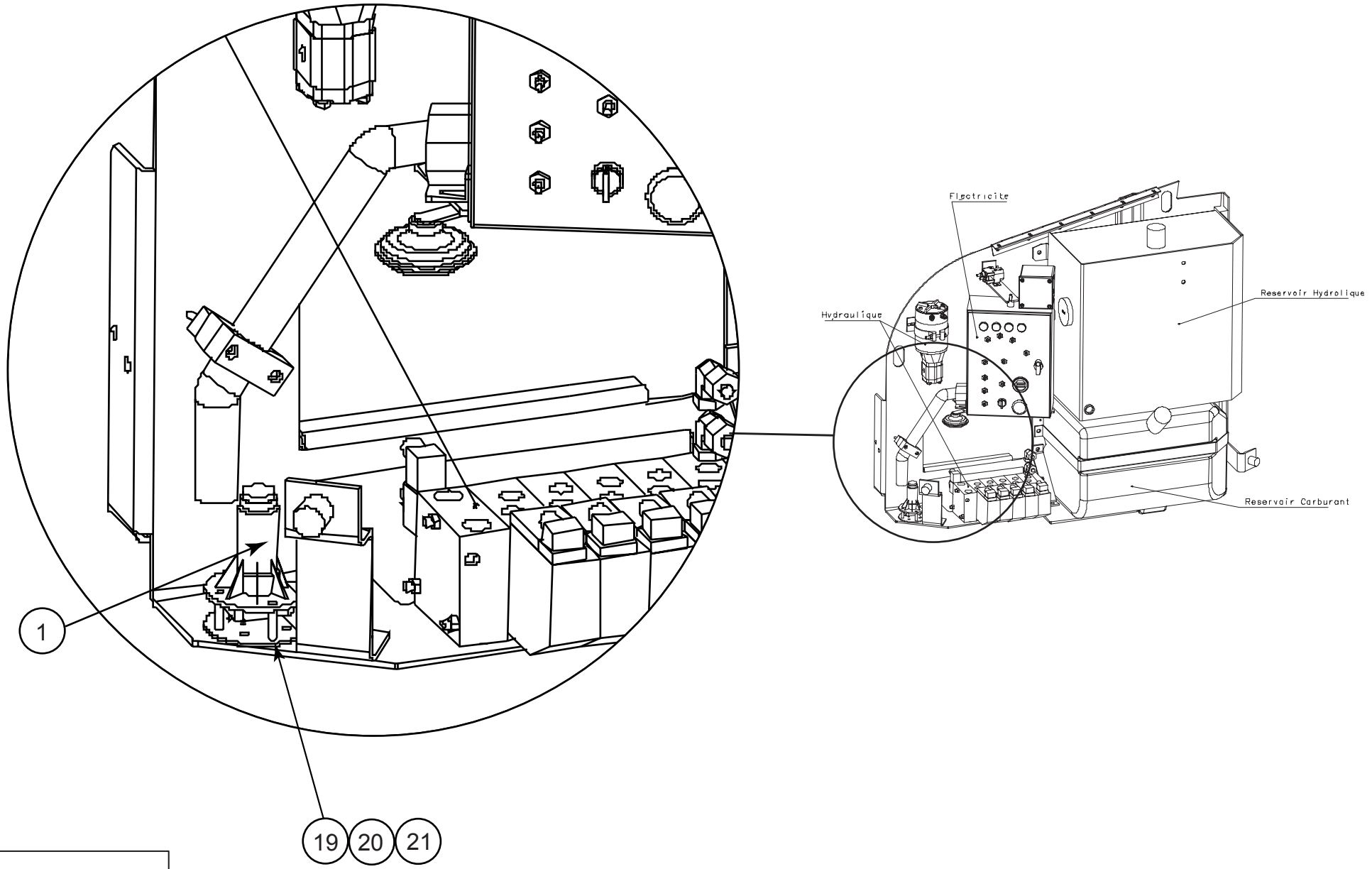


Devers HA16/18SPX

# ▲ DÉVERS
# TILT



| Rep. | Désignation | Designation | Specification | Qty | Code | Up to / jusqu'à |
|---|---|---|---|---|---|---|
| 1 | DÉTECTEUR DE DÉVERS | TILT DETECTOR | 5° | 1 | 2440203490 | |
| | CÂBLAGE DÉVERS | TILT DETECTOR CABLING | COMPRENANT: | 1 | 179C169700 | |
| | *GAINE SOUPLE* | *FLEXIBLE SHEATH* | *0.75M PVC5X7 REF:0-462* | *1* | *2440701920* | |
| | *DOUILLE* | *SOCKET* | *POUR BOITIER 0-926 893-1* | *3* | *2440404030* | |
| | *BOÎTIER* | *BOX* | *3 VOIES MALE* | *1* | *2440203170* | |
| 19 | VIS | SCREW | H M6X20-20 CL.8.8 ZB | 2 | 2331231330 | |
| 20 | RONDELLE ÉLASTIQUE | RUBBER WASHER | W 6 ZB | 2 | 2351201050 | |
| 21 | ECROU | NUT | H M6 CL. 8 ZB | 2 | 2341221050 | |

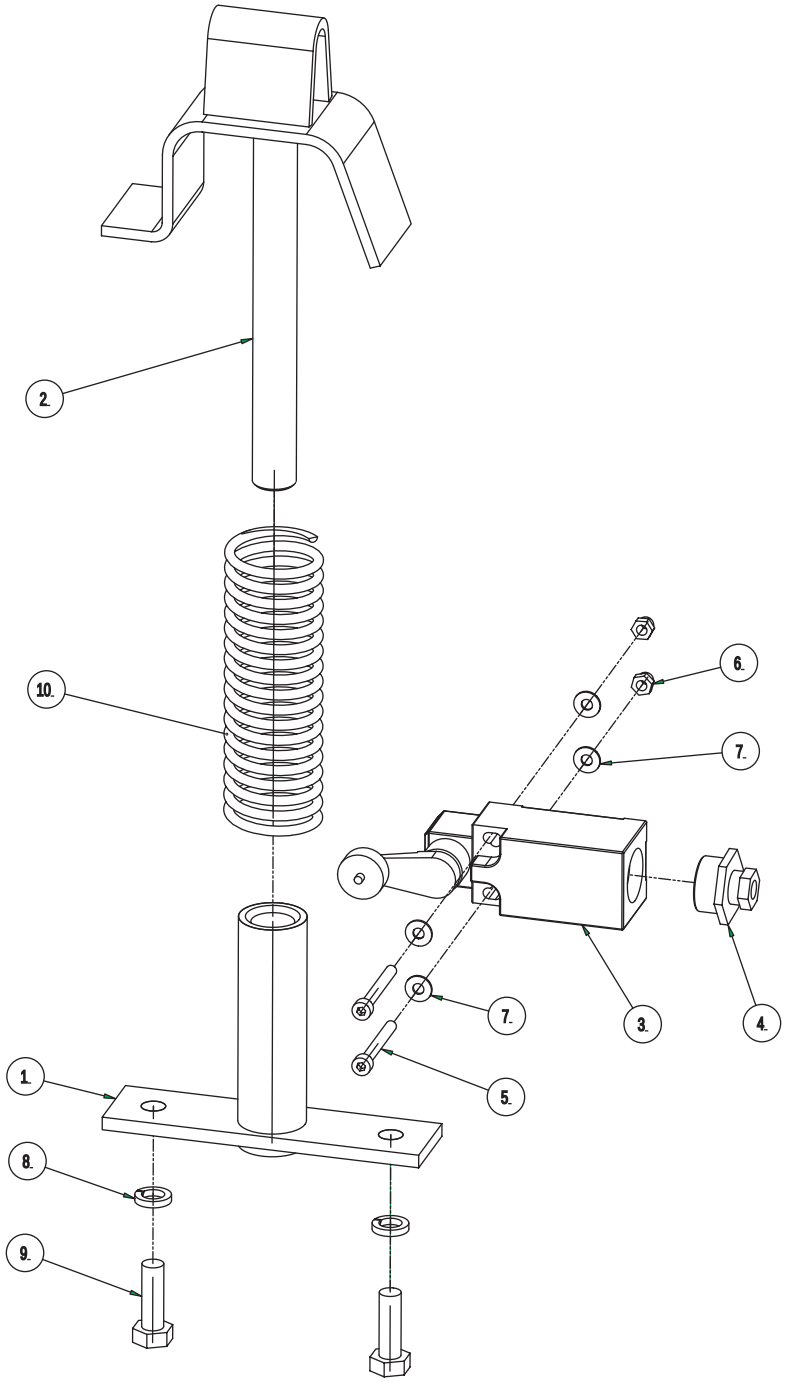


178P251170 a

# ▲ COUPURE G.V.
# HIGH SPEED CUT-OFF



| Rep. | Désignation | Designation | Specification | Qty | Code | Up to / jusqu'à |
|---|---|---|---|---|---|---|
| 1 | SUPPORT DE COMMANDE | CONTROL SUPPORT | | 1 | 137P203810 | |
| 2 | AXE DE COMMANDE | CONTROL PIN | / COUPURE GRANDE | 1 | 180P249260 | |
| 3 | INTERRUPTEUR DE POSITION | POSITION SWITCH | D4D-1520N | 1 | 2440901490 | |
| 4 | PRESSE-ÉTOUPE RÉDUCTEUR | REDUCER PACKING BOX | 13/7 | 1 | 2441613010 | |
| 5 | VIS | SCREW | CHC M4X35-20 CL.8,8 ZB | 2 | 2308231220 | |
| 6 | ECROU AUTOFREINÉ | SELF-LOCKED NUT | H FR M4 CL. 8 ZB | 2 | 2349221480 | |
| 7 | RONDELLE PLATE | FLAT WASHER | M 4 ZB | 4 | 2351112030 | |
| 8 | RONDELLE ÉLASTIQUE | RUBBER WASHER | W 8 ZB | 2 | 2351201070 | |
| 9 | VIS | SCREW | H M8X25-25 CL.8.8 ZB | 2 | 2331231430 | |
| 10 | RESSORT DE COMPRESSION | COMPRESSION SPRING | | 1 | 2326005000 | |
| | | | | | | |
| | | | | | | |
| | | | | | | |
| | | | | | | |
| | | | | | | |
| | | | | | | |
| | | | | | | |
| | | | | | | |
| | | | | | | |
| | | | | | | |
| | | | | | | |
| | | | | | | |
| | | | | | | |
| | | | | | | |
| | | | | | | |
| | | | | | | |

COUPE C-C
Echelle 1/1

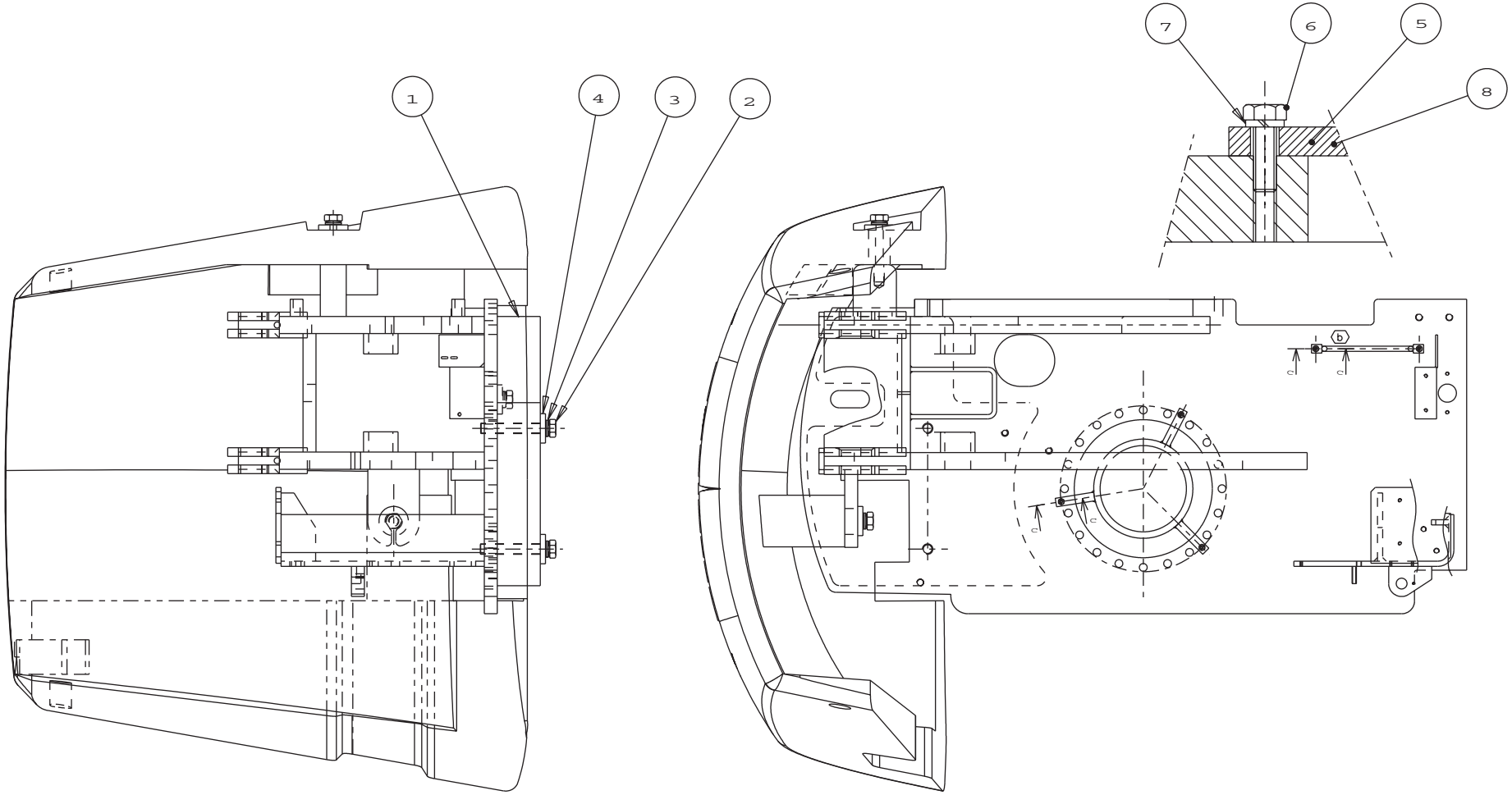


P24473 b

# ▲ CONTREPOIDS ADDITIONNEL
# ADDITIONAL COUNTERWEIGHT



| Rep. | Désignation | Designation | Specification | Qty | Code | Up to / jusqu'à |
|---|---|---|---|---|---|---|
| 1 | CONTREPOIDS ADDITIONNEL | ADDITIONAL COUNTERWEIGHT | | 1 | 180P238260 | |
| 2 | VIS | SCREW | H M24X160-60 CL.8.8 ZB | 2 | 2301233280 | |
| 3 | RONDELLE | WASHER | TREP 4L Ø24 ZB | 2 | 2351901310 | |
| 4 | RONDELLE | WASHER | Ø25/68 12 | 2 | 178D158570 | |
| 5 | ETOILE GUIDE FLEXIBLES | FLEXIBLE COUPLINGS GUIDE STAR | | 1 | 180P234440 | |
| 6 | VIS | SCREW | H M8X25-25 CL.8.8 ZB | 5 | 2331231430 | |
| 7 | RONDELLE ÉLASTIQUE | RUBBER WASHER | W 8 ZB | 5 | 2351201070 | |
| 8 | GUIDE FLEXIBLE | FLEXIBLE GUIDE | | 1 | 180P250180 | |

# ▲ CALCULATEUR HEAD



| Rep. | Désignation | Designation | Specification | Qty | Code | Up to / jusqu'à |
|---|---|---|---|---|---|---|
| | MODULE ELECTRONIQUE | | NOUVEAU CALCULATEUR | 1 | 2441308810 | |
| | *PROGRAMME CALCULATEUR* | | *STANDARD V 01.13* | *1* | *2441901100* | |
| | *CALCULATEUR* | *COMPUTER* | *VERSION AUSTRALIE* | *1* | *2441901210* | |
| | *CALCULATEUR* | *COMPUTER* | *VERSION USA V1.10* | *1* | *2441901200* | |
| | *CALCULATEUR* | *COMPUTER* | *PVG NLLE GESTION MVT* | *1* | *2901001620* | |
| | | | | | | |
| | | | | | | |
| | | | | | | |
| | | | | | | |
| | | | | | | |
| | | | | | | |
| | | | | | | |
| | | | | | | |
| | | | | | | |
| | | | | | | |
| | | | | | | |
| | | | | | | |
| | | | | | | |
| | | | | | | |
| | | | | | | |
| | | | | | | |
| | | | | | | |
| | | | | | | |
| | | | | | | |
| | | | | | | |
| | | | | | | |

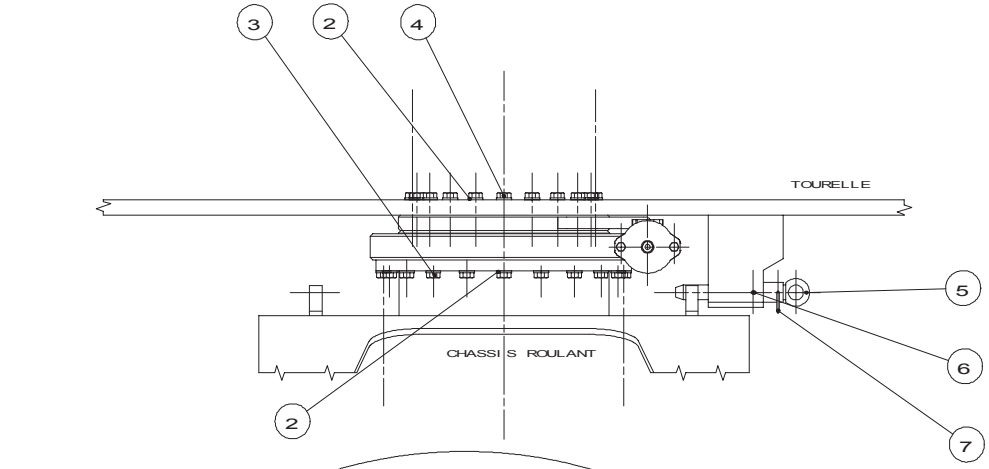
3
2
4
TOURELLE
5
CHASSIS ROULANT
6
2
7

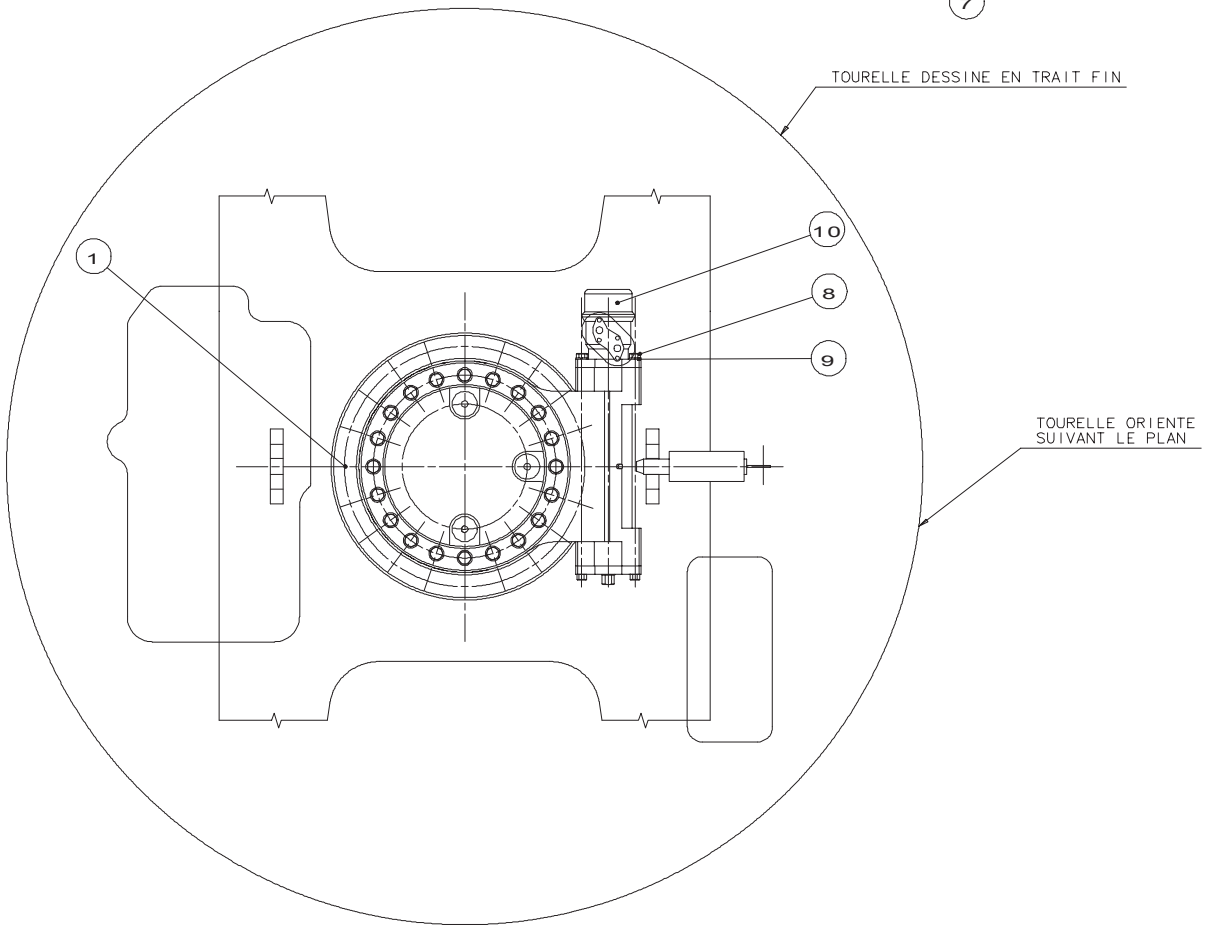
TOURELLE DESSINE EN TRAIT FIN
1
10
8
9
TOURELLE ORIENTE
SUIVANT LE PLAN

B15236 d

# ▲ COURONNE ORIENTATION
# SLEW RING



| Rep. | Désignation | Designation | Specification | Qty | Code | Up to / jusqu'à |
|---|---|---|---|---|---|---|
| 1 | COURONNE ORIENTATION | SLEW RING | PLAN FOURNISSEUR | 1 | 2420313640 | |
| 2 | RONDELLE | WASHER | HV 16 DC | 40 | 2351902910 | |
| 3 | VIS | SCREW | H M16X50-50 CL.10.9 DC | 20 | 2331239340 | |
| 4 | VIS | SCREW | H M16X90-38 CL.10.9 DC | 20 | 2331239350 | |
| 5 | BROCHE D'ORIENTATION | SLEWING ROD | | 1 | 178C142030 | |
| 6 | GOUPILLE ÉLASTIQUE | FLEXIBLE PIN | E 8-20 | 1 | 2352212430 | |
| 7 | EPINGLE D'AXE | SHAFT PIN | SAFIL 4028 ZB | 1 | 2425511120 | |
| 8 | VIS | SCREW | H UNC 1/2'X1'1/2-1'1/4 | 2 | 2321311520 | |
| 9 | RONDELLE RESSORT | SPRING WASHER | UNC 1/2' ZB | 2 | 2351902440 | |
| 10 | MOTEUR | MOTOR | EPM160C0 SP.5090 | 1 | 2431203450 | |
| | *POCHETTE DE JOINTS* | *BAG OF SEALS* | | *1* | *2421692410* | |
| | *POCHETTE DE JOINTS* | *BAG OF SEALS* | | *1* | *2421693150* | |
| | | | | | | |
| | | | | | | |
| | | | | | | |
| | | | | | | |
| | | | | | | |
| | | | | | | |
| | | | | | | |
| | | | | | | |
| | | | | | | |
| | | | | | | |
| | | | | | | |
| | | | | | | |
| | | | | | | |
| | | | | | | |

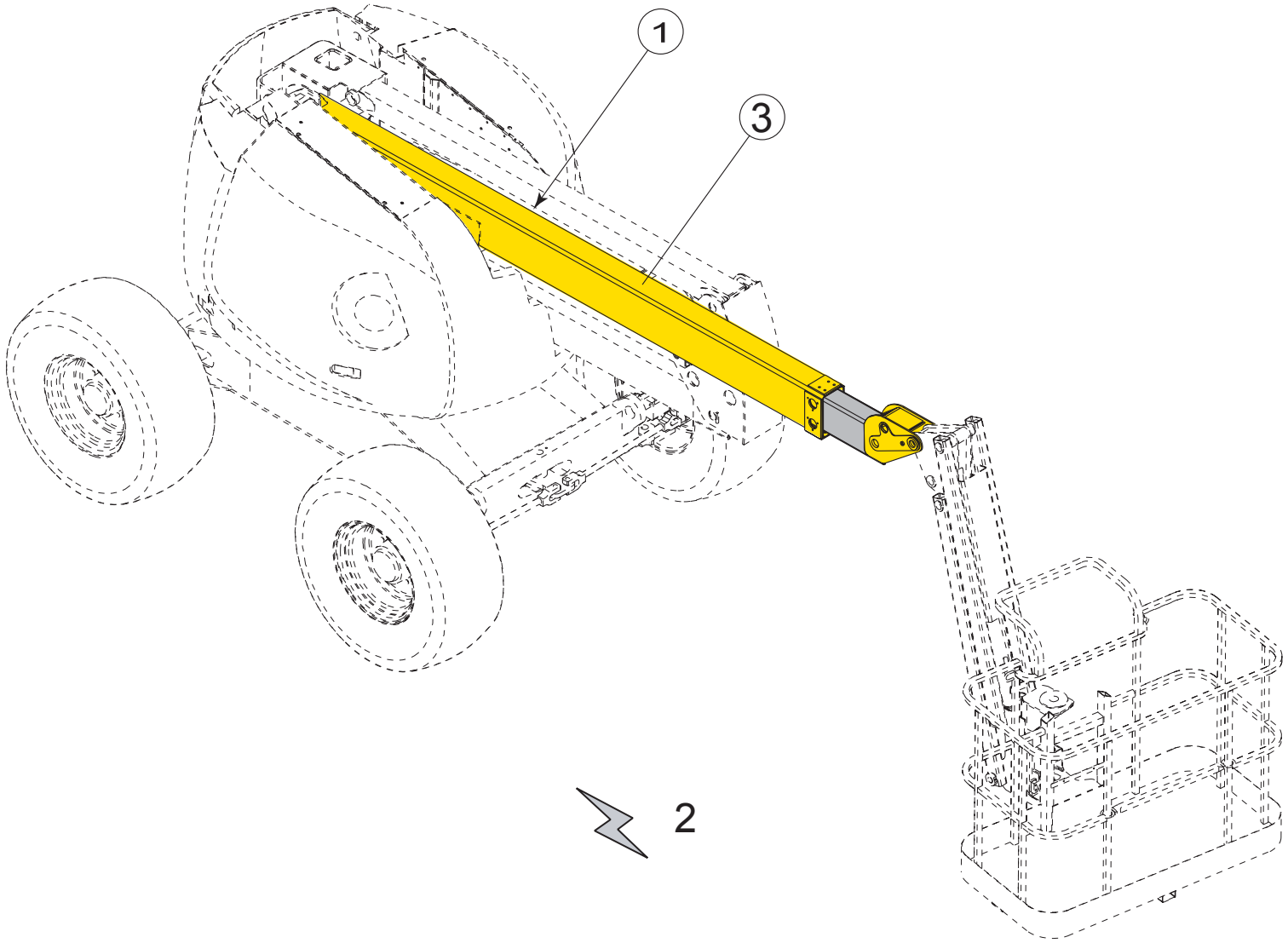


P20388 a

## ▲ FLÈCHE
## BOOM

◀ C ▶

| Rep. | Désignation | Designation | Specification | Up to / jusqu'à |
|---|---|---|---|---|
| 1 | CHAÎNE GUIDE FLEXIBLE | FLEXIBLE GUIDE CHAIN | | |
| 2 | ELECTRICITÉ | ELECTRICITY | FLÈCHE | |
| 3 | FLÈCHE TÉLESCOPIQUE | TELESCOPIC BOOM | | |
| | | | | |
| | | | | |
| | | | | |
| | | | | |
| | | | | |
| | | | | |
| | | | | |
| | | | | |
| | | | | |
| | | | | |
| | | | | |
| | | | | |
| | | | | |
| | | | | |
| | | | | |
| | | | | |
| | | | | |
| | | | | |
| | | | | |
| | | | | |
| | | | | |
| | | | | |
| | | | | |
| | | | | |

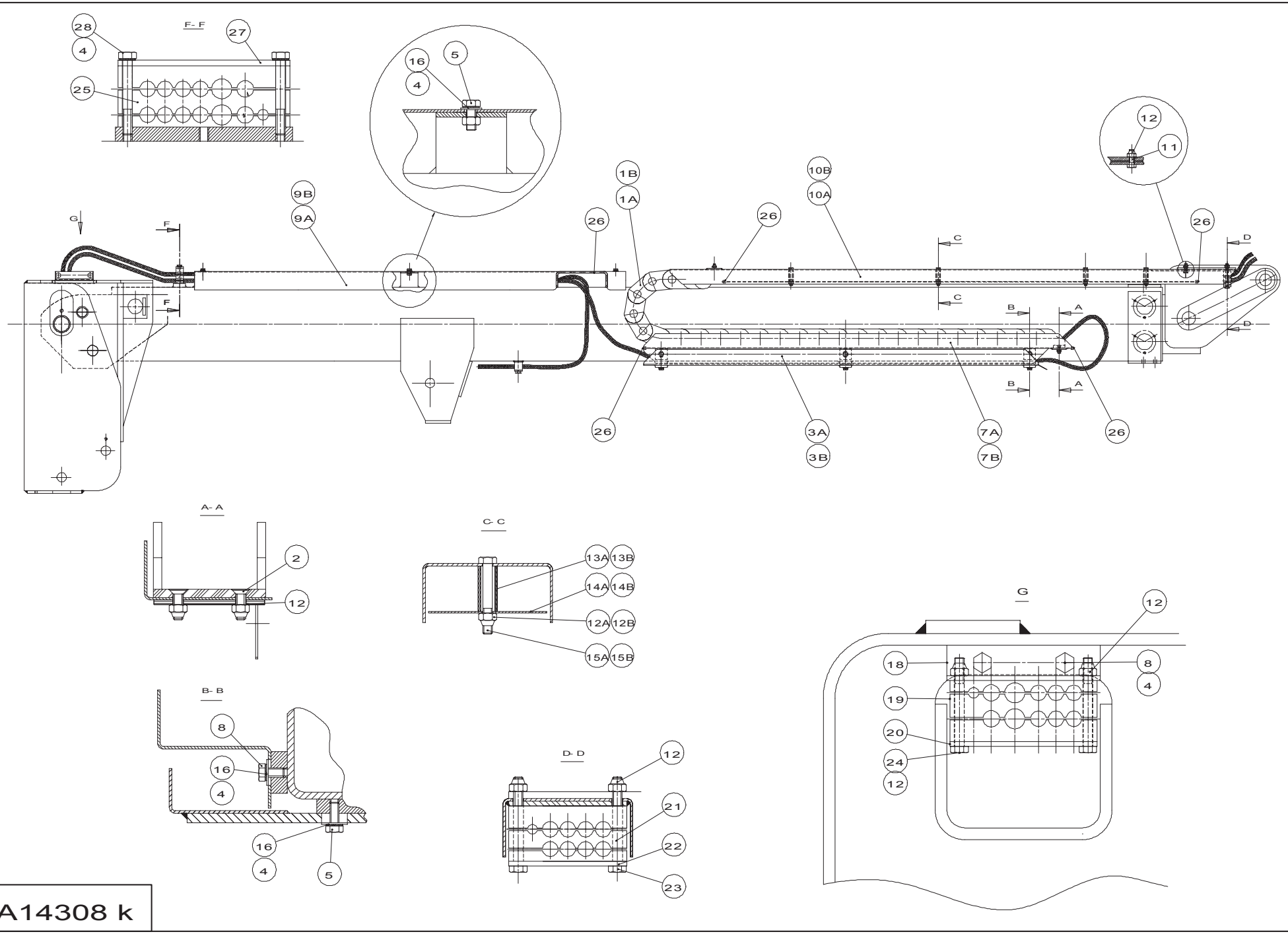
F- F
28
4
25
27
16
4
5
12
11
1B
1A
10B
10A
9B
9A
26
26
26
26
G
F
F
C
C
B
A
B
A
D
D
3A
3B
7A
7B
A- A
2
12
C- C
13A
13B
14A
14B
12A
12B
15A
15B
B- B
8
16
4
16
4
5
D- D
12
21
22
23
G
12
18
8
4
19
20
24
12

A14308 k

# ▲ CHAÎNE GUIDE FLEXIBLE
# FLEXIBLE GUIDE CHAIN



| Rep. | Désignation | Designation | Specification | Qty | Code | Up to / jusqu'à |
|---|---|---|---|---|---|---|
| 1 | CHAÎNE PORTE-CÂBLE | CABLE HOLDER CHAIN | S5169 | 1 | 2425612830 | |
| | *MAILLON OUVRABLE* | | | *1* | *2421303280* | |
| | *MAILLON EXTRÉMITÉ* | | | *1* | *2421303270* | |
| | *SÉPARATEUR* | *SEPARATOR* | | *1* | *2421906320* | |
| 2 | VIS | SCREW | FHC M8X25-25 CL.8.8 ZB | 4 | 2307331710 | |
| 3 | GOULOTTE | TRUNKING | | 1 | 178B152450 | |
| 4 | RONDELLE À DENTS | TOOTH LOCK WASHER | DEC 8 ZB | 13 | 2351301090 | |
| 5 | VIS | SCREW | H M8X20-20 CL.8.8 ZB | 6 | 2331231420 | |
| 7 | SUPPORT | HOLDER | SUPPORT CHAINE | 1 | 178B152470 | |
| 8 | VIS | SCREW | H M8X16-16 CL.8.8 ZB | 3 | 2331231400 | |
| 9 | CAPOT SUP | TOP COVER | | 1 | 178B152420 | |
| 10 | SUPPORT | HOLDER | SUPPORT CHAINE | 1 | 178B152490 | |
| 11 | VIS | SCREW | H M8X25-25 CL.8.8 ZB | 2 | 2331231430 | |
| 12 | ECROU AUTOFREINÉ | SELF-LOCKED NUT | H FR M8 CL. 8 ZB | 14 | 2349221500 | |
| 13 | AXE | PIN | | 3 | 178D159110 | |
| 14 | TÔLE | PLATE | | 1 | 178C147780 | |
| 15 | VIS | SCREW | H M8X60-22 CL.8.8 ZB | 4 | 2301231710 | |
| 16 | RONDELLE PLATE | FLAT WASHER | L 8 ZB | 9 | 2351113070 | |
| 18 | EQUERRE DE FIXATION | ANGLE BRACKET | | 1 | 133D163640 | |
| 19 | PATIN DE SERRAGE | TIGHTENING PAD | | 1 | 178D163910 | |
| 20 | PLAT DE SERRAGE | TIGHTENING IRON | | 1 | 133D163700 | |
| 21 | PLAT DE SERRAGE | TIGHTENING IRON | | 1 | 178D159640 | |
| 22 | PLAT DE SERRAGE FLEXIBLE | HOSE TIGHTENING IRON | | 1 | 178D159700 | |
| 23 | VIS | SCREW | H M8X80-22 CL.8.8 ZB | 2 | 2301231750 | |
| 24 | VIS | SCREW | H M8X75-22 CL.8.8 ZB | 2 | 2301231740 | |
| 26 | GALON NON FEUTRÉ | BRAID (NOT FELT) | | 0.6 | 2420701180 | |

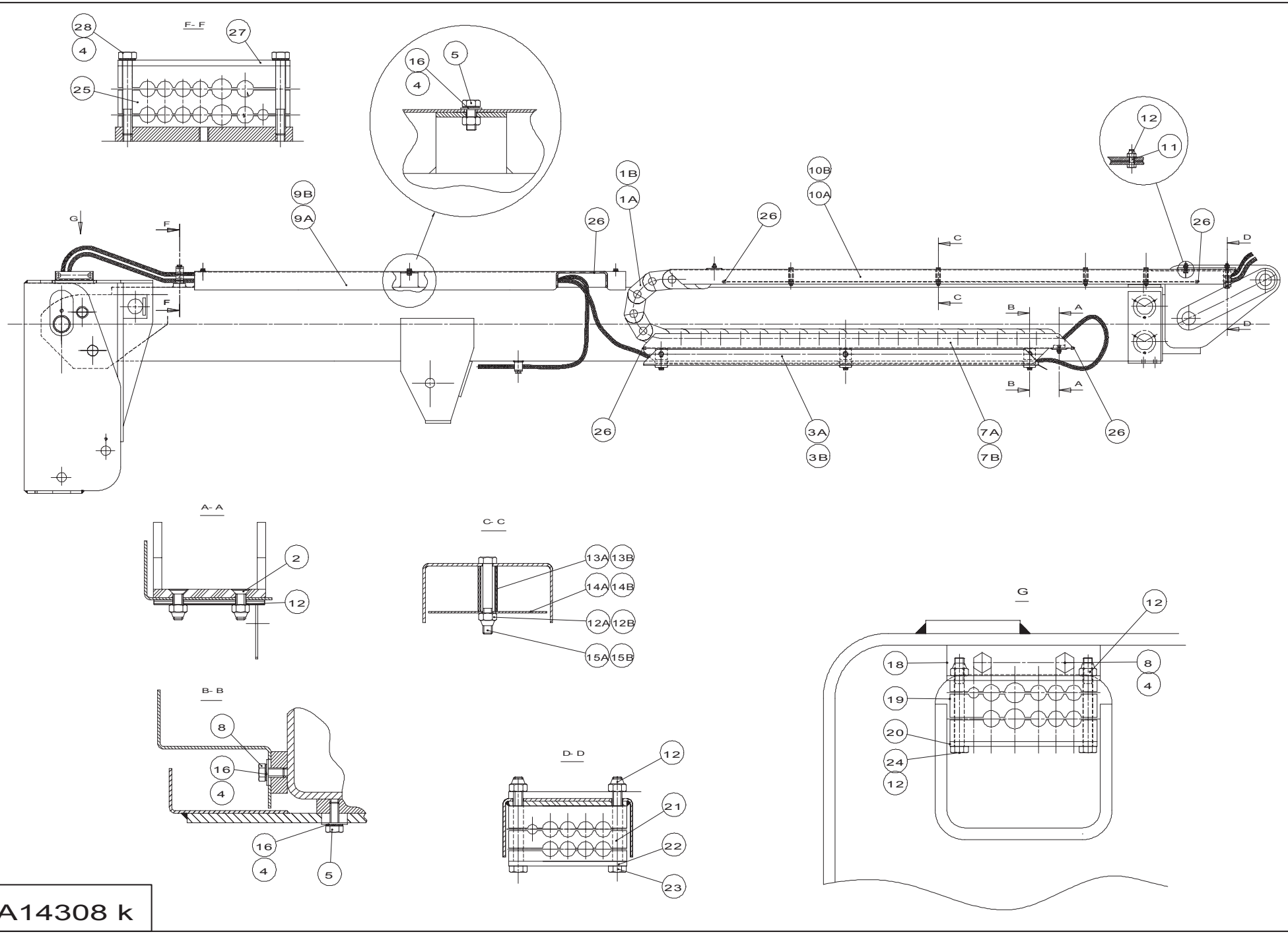
F- F
28
4
25
27
16
4
5
12
11
1B
1A
10B
10A
9B
9A
26
26
26
26
G
F
F
C
C
B
A
B
A
D
D
3A
3B
7A
7B
A- A
2
12
C- C
13A
13B
14A
14B
12A
12B
15A
15B
B- B
8
16
4
16
4
5
D- D
12
21
22
23
G
12
18
8
4
19
20
24
12

A14308 k

# ▲ CHAÎNE GUIDE FLEXIBLE
# FLEXIBLE GUIDE CHAIN



| Rep. | Désignation | Designation | Specification | Qty | Code | Up to / jusqu'à |
|---|---|---|---|---|---|---|
| 27 | PLAT DE SERRAGE FLEXIBLE | HOSE TIGHTENING IRON | | 1 | 133D163520 | |
| 28 | VIS | SCREW | H M8X65-22 CL.8.8 ZB | 2 | 2301231720 | |
| | | | | | | |
| | | | | | | |
| | | | | | | |
| | | | | | | |
| | | | | | | |
| | | | | | | |
| | | | | | | |
| | | | | | | |
| | | | | | | |
| | | | | | | |
| | | | | | | |
| | | | | | | |
| | | | | | | |
| | | | | | | |
| | | | | | | |
| | | | | | | |
| | | | | | | |
| | | | | | | |
| | | | | | | |
| | | | | | | |
| | | | | | | |
| | | | | | | |
| | | | | | | |
| | | | | | | |
| | | | | | | |

# ELECTRICITÉ
# ELECTRICITY



| Rep. | Désignation | Designation | Specification | Qty | Code | Up to / jusqu'à |
|---|---|---|---|---|---|---|
| | CÂBLAGE FAISCEAU | WIRING HARNESS CABLING | 30X1MM2 N°2 COMPRE- | 1 | 180P211530 | |
| | FICHE | PLUG | IP65 37 VOIES | 1 | 2440603880 | |
| | ADAPTATEUR | ADAPTOR | 1'7/16-18 UNEF | 1 | 2440106340 | |
| | GAINE | SHEATH | P MAFLEX 23 0.17M | 1 | 2440701950 | |
| | CÂBLAGE FAISCEAU | WIRING HARNESS CABLING | 30X1 MM² N°1 COMPRE- | 1 | 180P211520 | |
| | FICHE | PLUG | IP65 37 VOIES | 1 | 2440603880 | |
| | ADAPTATEUR | ADAPTOR | 1'7/16-18 UNEF | 1 | 2440106340 | |
| | GAINE | SHEATH | P MAFLEX 23 0.17M | 1 | 2440701950 | |
| | FAISCEAU | BUNDLE | 30X1 MM² N°1 | 1 | 180P211460 | |
| | FAISCEAU | BUNDLE | 30X1 MM2 N°2 | 1 | 180P211470 | |
| | | | | | | |
| | | | | | | |
| | | | | | | |
| | | | | | | |
| | | | | | | |
| | | | | | | |
| | | | | | | |
| | | | | | | |
| | | | | | | |
| | | | | | | |
| | | | | | | |
| | | | | | | |
| | | | | | | |
| | | | | | | |
| | | | | | | |

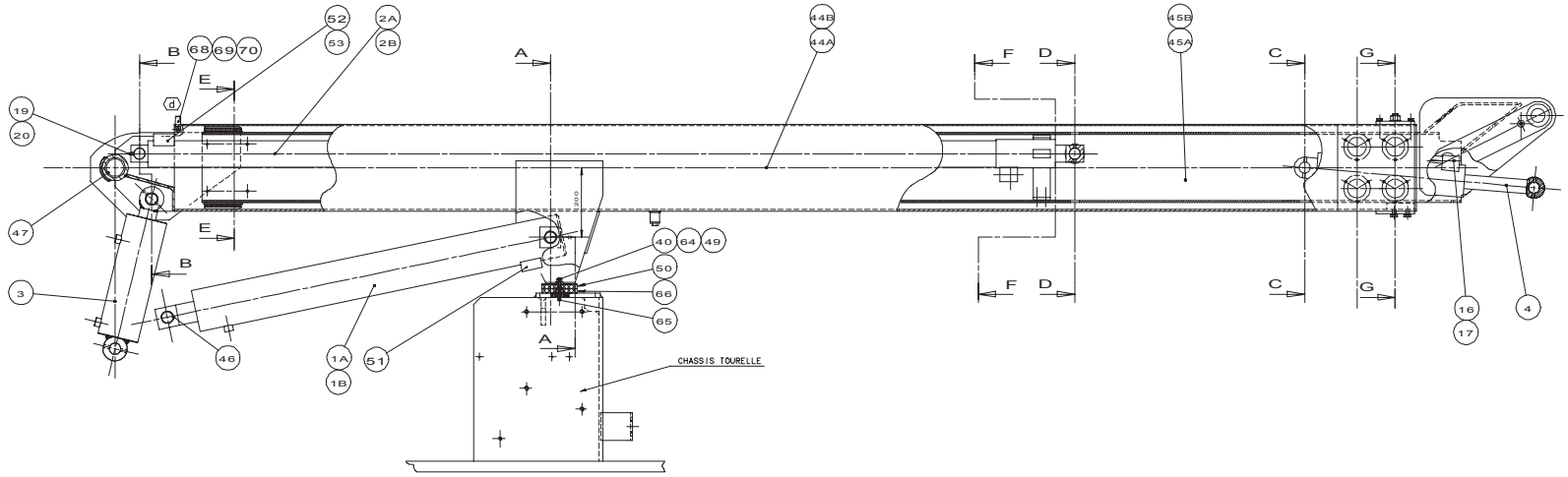


COUPE B- B

ECHELLE 1/2

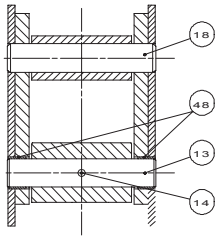


COUPE D- D

ECHELLE 1/2

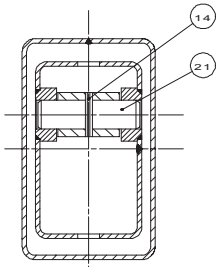


COUPE C- C

ECHELLE 1/2

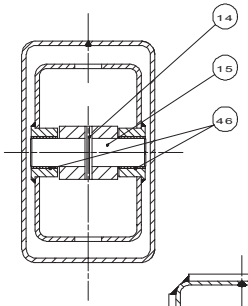


COUPE E- E

ECHELLE 1/2

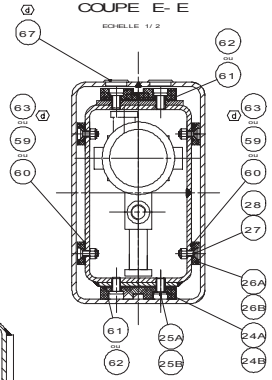


COUPE F- F

ECHELLE 1/2

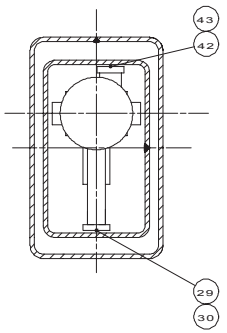


COUPE G- G

ECHELLE 1/2

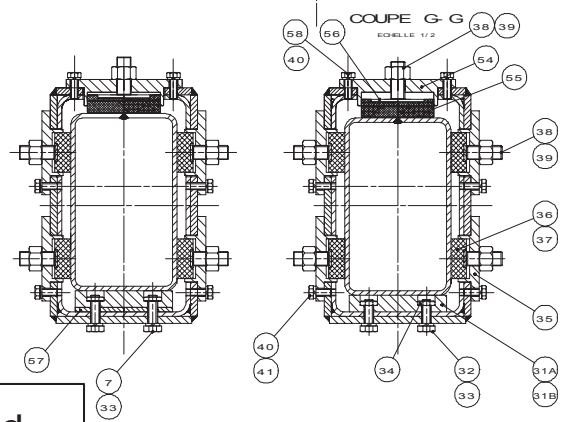


COUPE A- A

ECHELLE 1/2

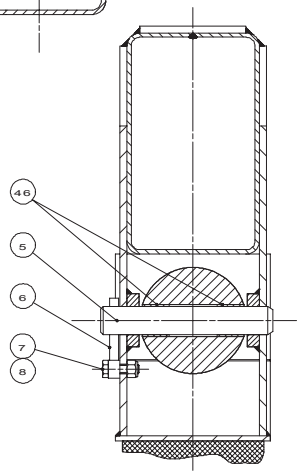


P20816 d

# ▲ FLÈCHE TÉLESCOPIQUE
# TELESCOPIC BOOM



| Rep. | Désignation | Designation | Specification | Qty | Code | Up to / jusqu'à |
|---|---|---|---|---|---|---|
| 1 | VÉRIN RELEVAGE FLÈCHE | JIB RAISING JACK | | 1 | 178C147460 | |
| | *PISTON* | *PISTON* | | *1* | *2421609920* | |
| | *POCHETTE DE JOINTS* | *BAG OF SEALS* | | *1* | *2421692700* | |
| | *BAGUE* | *RING* | *PM 32X30 DX* | *4* | *2390150540* | |
| | *VALVE D'ÉQUILIBRAGE* | *BALANCING VALVE* | *CBBA-LHN 210B* | *1* | *2422204860* | |
| 2 | VÉRIN DE TÉLESCOPAGE | TELESCOPIC ACTION JACK | 16M | 1 | 178C144440 | |
| *52* | *CARTOUCHE D'ÉQUILIBRAGE* | *BALANCE CARTRIDGE* | *CBCA-LHN* | *1* | *2427007030* | |
| *53* | *CLAPET* | *VALVE* | *CKCB-XCN* | *1* | *2426602110* | |
| | *POCHETTE DE JOINTS* | *BAG OF SEALS* | | *1* | *2421693450* | |
| | *TIGE PISTON* | | | *1* | *2422006200* | |
| | *TÊTE GUIDE TIGE* | | | *1* | *2422006220* | |
| | *PISTON* | *PISTON* | | *1* | *2421620360* | |
| | *POCHETTE DE JOINTS* | *BAG OF SEALS* | | *1* | *2421692680* | |
| | *VÉRIN DE TÉLESCOPAGE* | *TELESCOPIC ACTION JACK* | *SERTA* | *1* | *178C144440* | |
| | *VÉRIN DE TÉLESCOPAGE* | *TELESCOPIC ACTION JACK* | *BURNSIDE* | *1* | *178C144440* | |
| 3 | VÉRIN ÉMETTEUR COMPEN. | COMPENSATION OUTPUT CYLINDER | | 1 | 178C159120 | |
| | *VÉRIN ÉMETTEUR COMPEN.* | *COMPENSATION OUTPUT CYLINDER* | *BURNSIDE* | *1* | *178C159120* | |
| | *POCHETTE DE JOINTS* | *BAG OF SEALS* | *BURNSIDE* | *1* | *2421693070* | |
| | *CORPS* | *BLOCK* | *BURNSIDE* | *1* | *2420316060* | |
| | *TIGE* | *ROD* | *BURNSIDE* | *1* | *2422005260* | |
| | *PISTON* | *PISTON* | *BURNSIDE* | *1* | *2421608950* | |
| | *GUIDE TIGE DE VÉRIN* | *CYLINDER ROD GUIDE* | | *1* | *2420703680* | |
| | *VÉRIN ÉMETTEUR COMPEN.* | *COMPENSATION OUTPUT CYLINDER* | *HES* | *1* | *178C159120* | |
| 4 | VÉRIN RÉCEPTEUR COMPENS. | COMPENSATION INPUT CYLINDER | | 1 | 178C159130 | |
| | *VÉRIN RÉCEPTEUR COMPENS.* | *COMPENSATION INPUT CYLINDER* | *HES* | *1* | *178C159130* | |
| | *VÉRIN RÉCEPTEUR COMPENS.* | *COMPENSATION INPUT CYLINDER* | *BURNSIDE* | *1* | *178C159130* | |

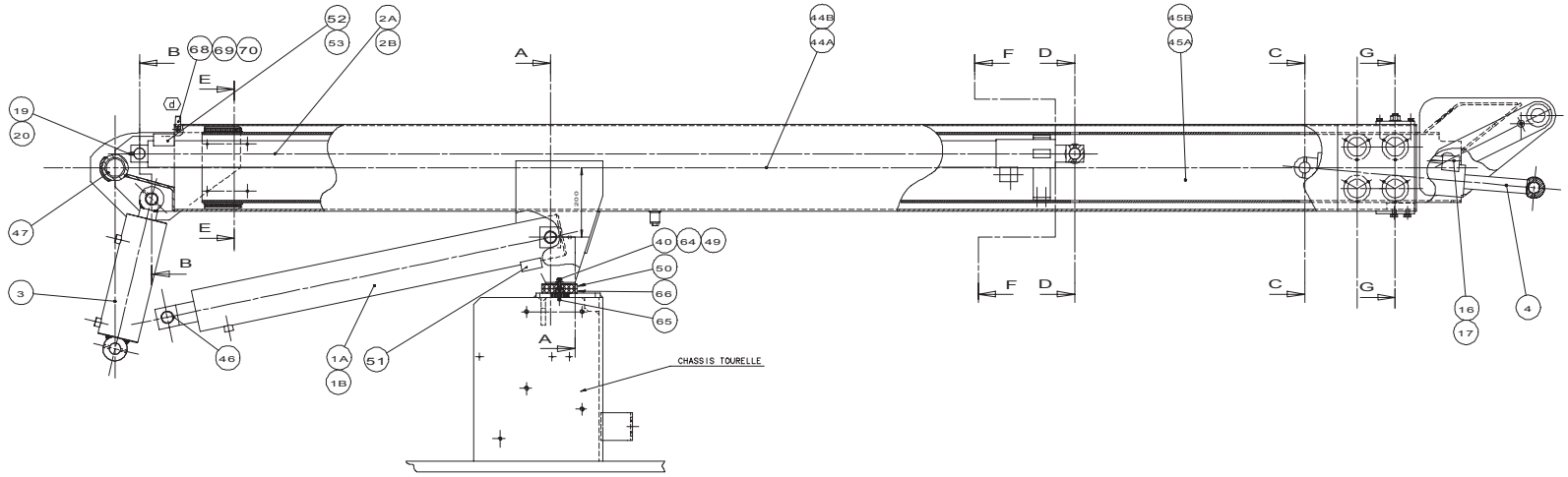


COUPE B- B

ECHELLE 1/2

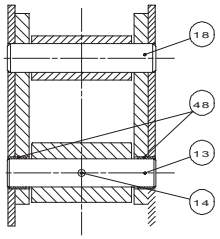


COUPE D- D

ECHELLE 1/2

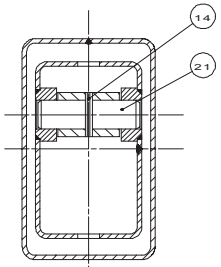


COUPE C- C

ECHELLE 1/2

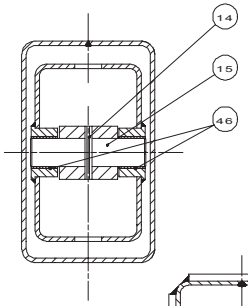


COUPE E- E

ECHELLE 1/2

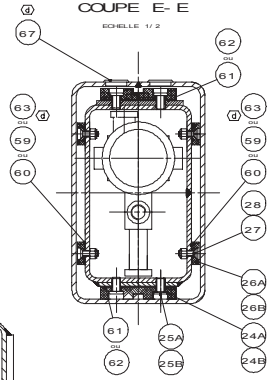


COUPE F- F

ECHELLE 1/2

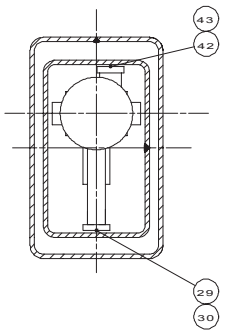


COUPE G- G

ECHELLE 1/2

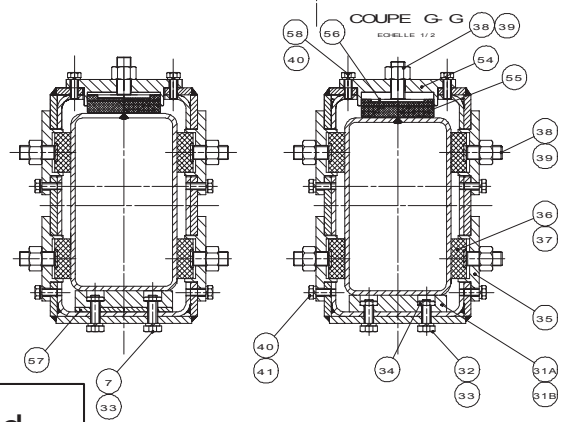


COUPE A- A

ECHELLE 1/2

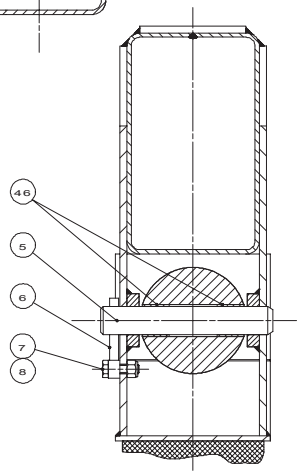


P20816 d

# ▲ FLÈCHE TÉLESCOPIQUE
# TELESCOPIC BOOM



| Rep. | Désignation | Designation | Specification | Qty | Code | Up to / jusqu'à |
|---|---|---|---|---|---|---|
| | *POCHETTE DE JOINTS* | *BAG OF SEALS* | *BURNSIDE* | *1* | *2420703080* | |
| | *CORPS* | *BLOCK* | *BURNSIDE* | *1* | *2420316070* | |
| | *TIGE* | *ROD* | *BURNSIDE* | *1* | *2422005270* | |
| | *GUIDE TIGE DE VÉRIN* | *CYLINDER ROD GUIDE* | *BURNSIDE* | *1* | *2420703690* | |
| | *PISTON* | *PISTON* | *BURNSIDE* | *1* | *2421608500* | |
| 5 | AXE DE VÉRIN | CYLINDER AXIS | | 1 | 178C142220 | |
| 6 | CHAPE MÂLE LISSE | SMOOTH MALE SLOT | | 1 | 132D154320 | |
| 7 | VIS | SCREW | H M10X35-35 CL.8.8 ZB | 1 | 2301231770 | |
| 8 | ECROU AUTOFREINÉ | SELF-LOCKED NUT | H FR M10 CL. 8 ZB | 1 | 2349221510 | |
| 13 | AXE NEZ DE VÉRIN | CYLINDER NOSE-PIECE PIN | | 1 | 178C142240 | |
| 14 | GOUPILLE ÉLASTIQUE | FLEXIBLE PIN | E 8-80 | 3 | 2352212530 | |
| 15 | AXE PIED DE VÉRIN | CYLINDER FOOT PIN | | 1 | 178D158360 | |
| 16 | CLAPET ANTI-RETOUR DBLE | ONE-WAY DOUBLE VALVE | | 1 | 2426602580 | |
| 17 | VIS | SCREW | CHC M6X35-24 CL.8,8 ZB | 3 | 2308231520 | |
| 18 | AXE PIED DE VÉRIN | CYLINDER FOOT PIN | | 1 | 116D147171 | |
| 19 | VIS À BOUT CUVETTE | HEX CAP SCREW | HC M8-25-45H DC | 1 | 2316132210 | |
| 20 | ECROU BAS | THIN NUT | HM M8 CL. 4 ZB | 1 | 2341222030 | |
| 21 | AXE NEZ DE VÉRIN | CYLINDER NOSE-PIECE PIN | | 1 | 116D151450 | |
| 24 | PATIN AR TÉLESCOPE | TELESCOPE REAR PAD | S5819 | 2 | 138P206090 | |
| 25 | VIS TÊTE EXTMT BASSE | EXTREMELY LOW-HEADED SCREW | CHC M10X16-16 CL10.9 DC | 8 | 2338331430 | |
| 26 | PATIN | PAD | | 4 | 178C152620 | |
| 27 | VIS | SCREW | FHC M6X20-20 CL.10.9 DC | 16 | 2337331050 | |
| 28 | ECROU AUTOFREINÉ | SELF-LOCKED NUT | H FR M6 CL. 8 ZB | 16 | 2349221490 | |
| 29 | PATIN | PAD | 30X50 EP.7 | 1 | 1200507760 | |
| 30 | VIS | SCREW | FHC M8X16-16 CL.8.8 ZB | 2 | 2307331690 | |
| 31 | PATIN | PAD | NYLATRON 19 | 1 | 116C132220 | |

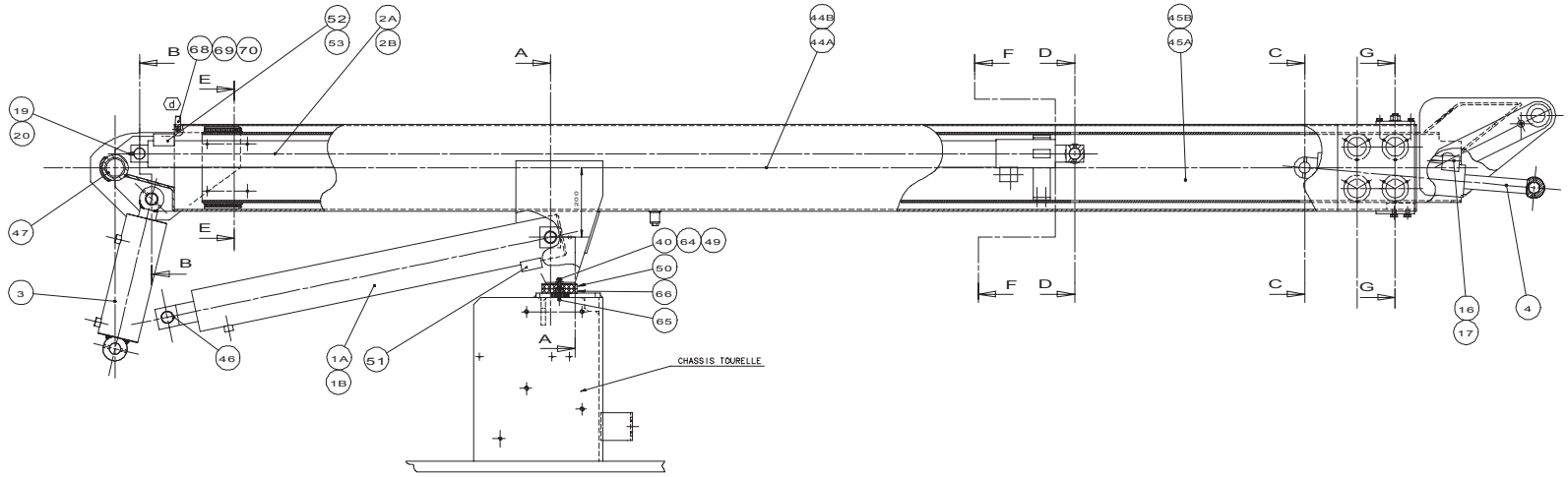


COUPE B- B

ECHELLE 1/2

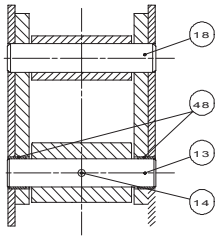


COUPE D- D

ECHELLE 1/2

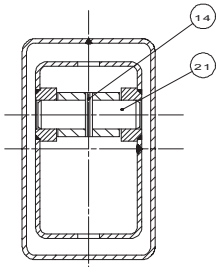


COUPE C- C

ECHELLE 1/2

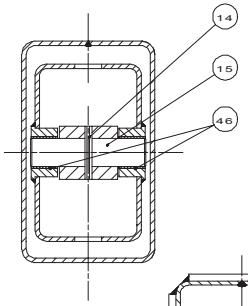


COUPE E- E

ECHELLE 1/2

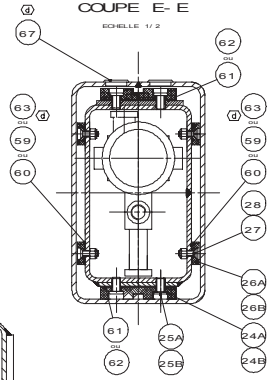


COUPE F- F

ECHELLE 1/2

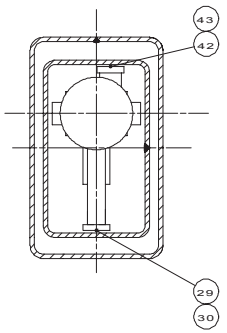


COUPE G- G

ECHELLE 1/2

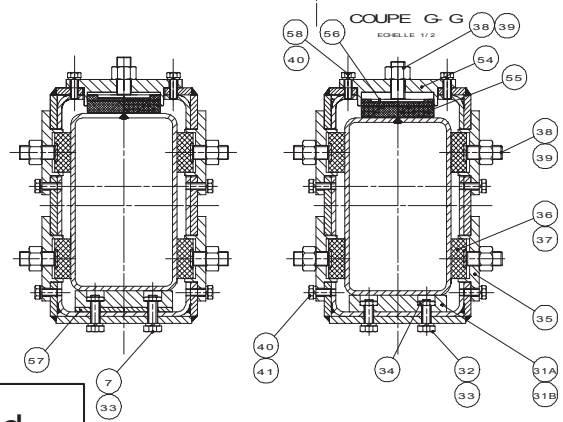


COUPE A- A

ECHELLE 1/2

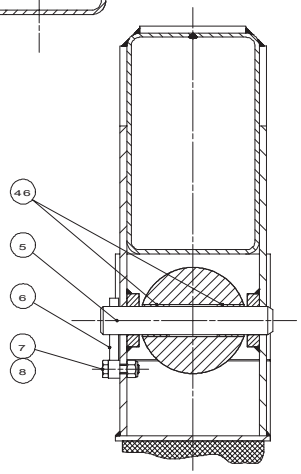


P20816 d

# ▲ FLÈCHE TÉLESCOPIQUE
# TELESCOPIC BOOM



| Rep. | Désignation | Designation | Specification | Qty | Code | Up to / jusqu'à |
|---|---|---|---|---|---|---|
| 32 | VIS | SCREW | H M10X30-30 CL.8.8 ZB | 8 | 2331231540 | |
| 33 | RONDELLE ÉLASTIQUE | RUBBER WASHER | W 10 ZB | 8 | 2351902930 | |
| 34 | ECROU BAS | THIN NUT | HM M10 CL. 4 ZB | 8 | 2341222040 | |
| 35 | SUPPORT PATIN LATÉRAL | SIDE PAD SUPPORT | | 8 | 138P209630 | |
| 36 | ENTRETOISE | BRACE | | 8 | 179P204580 | |
| 37 | PATIN D'USURE | WEAR PAD | | 8 | 179P206420 | |
| 38 | VIS À BOUT CUVETTE | HEX CAP SCREW | HC M16-40-45H DC | 8 | 2316132200 | |
| 39 | ECROU | NUT | H M16 CL. 8 ZB | 8 | 2341221110 | |
| 40 | RONDELLE ÉLASTIQUE | RUBBER WASHER | W 8 ZB | 26 | 2351201070 | |
| 41 | VIS | SCREW | H M8X20-20 CL.8.8 ZB | 24 | 2331231420 | |
| 42 | VIS | SCREW | FHC M6X10-10 CL.8.8 ZB | 2 | 2307331470 | |
| 43 | PATIN DE GUIDAGE | GUIDE PAD | 50X30X7 | 1 | 116D152300 | |
| 44 | FÛT DE FLÈCHE | BOOM POST | | 1 | 137A147240 | |
| | *BAGUE* | *RING* | *S5717* | *2* | *2390190830* | |
| | *BAGUE* | *RING* | *PM 3220 DX* | *2* | *2820300320* | |
| 45 | TÉLESCOPE | TELESCOPE | 16M | 1 | 178A142110 | |
| | *BAGUE* | *RING* | *PM 32X30 DX* | *2* | *2390150540* | |
| 49 | VIS | SCREW | FHC M8X30-30 CL.10.9 ZB | 2 | 2307331720 | |
| 50 | PATIN | PAD | REPOSE FLECHE | 1 | 179P202110 | |
| 54 | SUPPORT | HOLDER | | 1 | 178C152640 | |
| 55 | PATIN DE GUIDAGE | GUIDE PAD | | 1 | 178D160080 | |
| 56 | RONDELLE D'APPUI | SUPPORT WASHER | | 1 | 178D160070 | |
| 57 | CALE | CHOCK | | 1 | 178D160000 | |
| 58 | VIS | SCREW | H M8X25-25 CL.8.8 ZB | 4 | 2331231430 | |
| 59 | CALE EP 1 MM | | | 1 | 178D159980 | |
| 60 | CALE EP 2 MM | | | 1 | 178D159990 | |

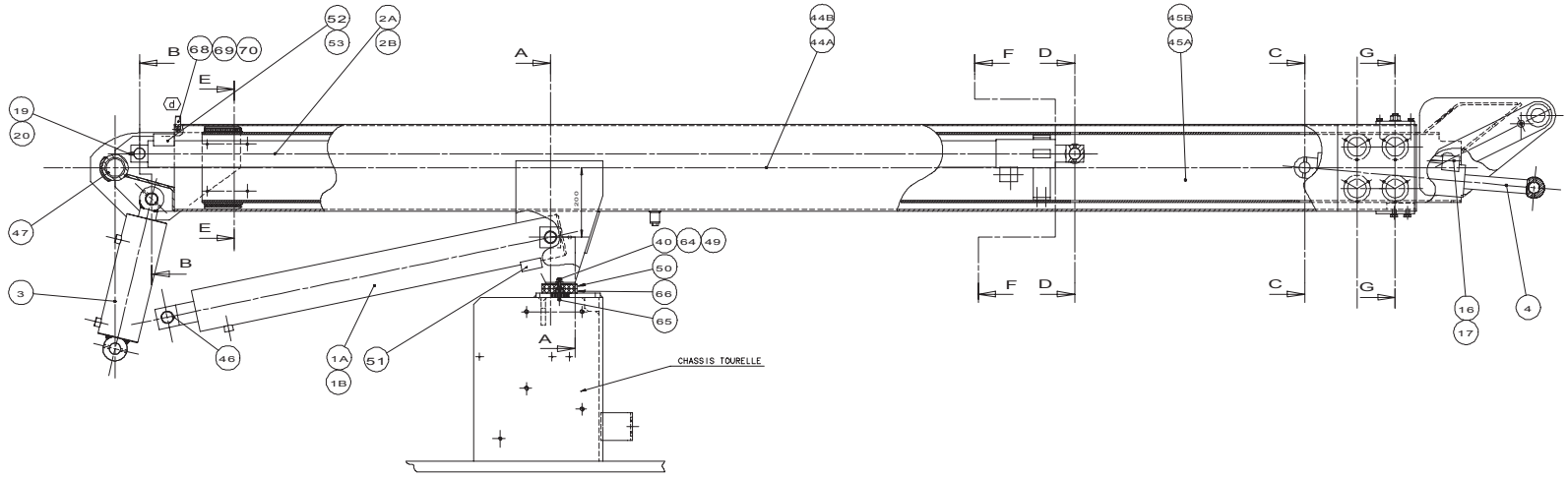


COUPE B- B

ECHELLE 1/2

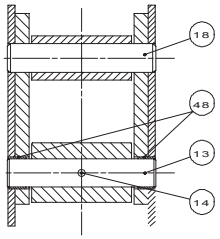


COUPE D- D

ECHELLE 1/2

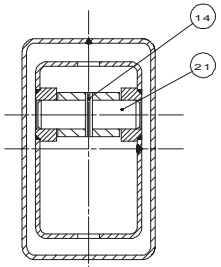


COUPE C- C

ECHELLE 1/2

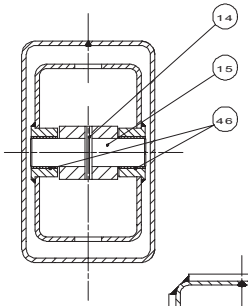


COUPE E- E

ECHELLE 1/2

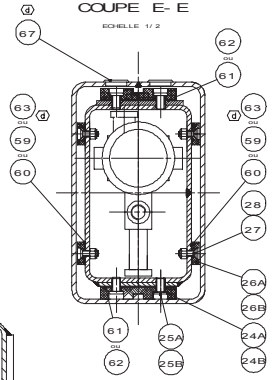


COUPE F- F

ECHELLE 1/2

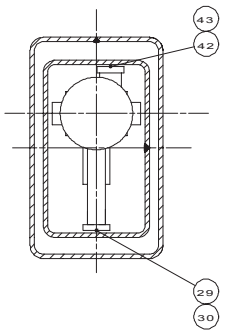


COUPE G- G

ECHELLE 1/2

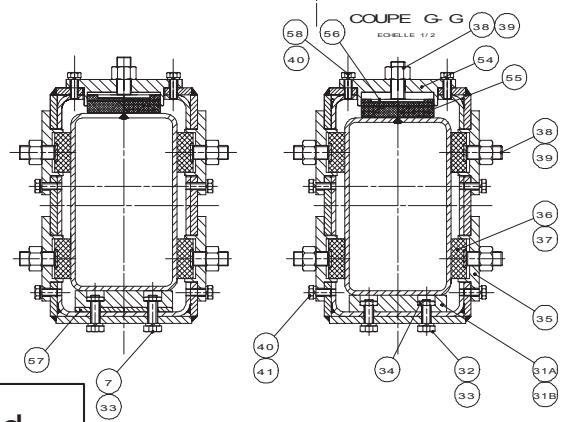


COUPE A- A

ECHELLE 1/2

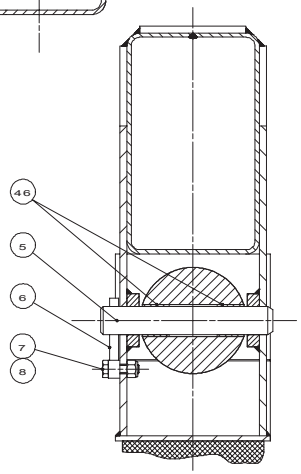


P20816 d

# ▲ FLÈCHE TÉLESCOPIQUE
# TELESCOPIC BOOM



| Rep. | Désignation | Designation | Specification | Qty | Code | Up to / jusqu'à |
|---|---|---|---|---|---|---|
| 61 | CALE | CHOCK | EP. 1 | 1 | 178P210480 | |
| 62 | CALE | CHOCK | EP. 2 | 1 | 178P210470 | |
| 63 | CALE | CHOCK | EP 0.5 | 1 | 178D160500 | |
| 64 | ECROU | NUT | H M8 CL. 8 ZB | 2 | 2341221070 | |
| 65 | VIS | SCREW | CHC M8X25-25 CL.8,8 ZB | 2 | 2308231700 | |
| 66 | PATIN | PAD | PATIN BUTEE FLECHE | 1 | 178C143340 | |
| 67 | BOUCHON OPERCULE | LOCK BOLT / PLUG SCREW | | 4 | 2420212130 | |
| 69 | RONDELLE À DENTS | TOOTH LOCK WASHER | DEC 6 ZB | 1 | 2351301070 | |
| 70 | VIS | SCREW | H M6X16-16 CL.8.8 ZB | 1 | 2331231310 | |

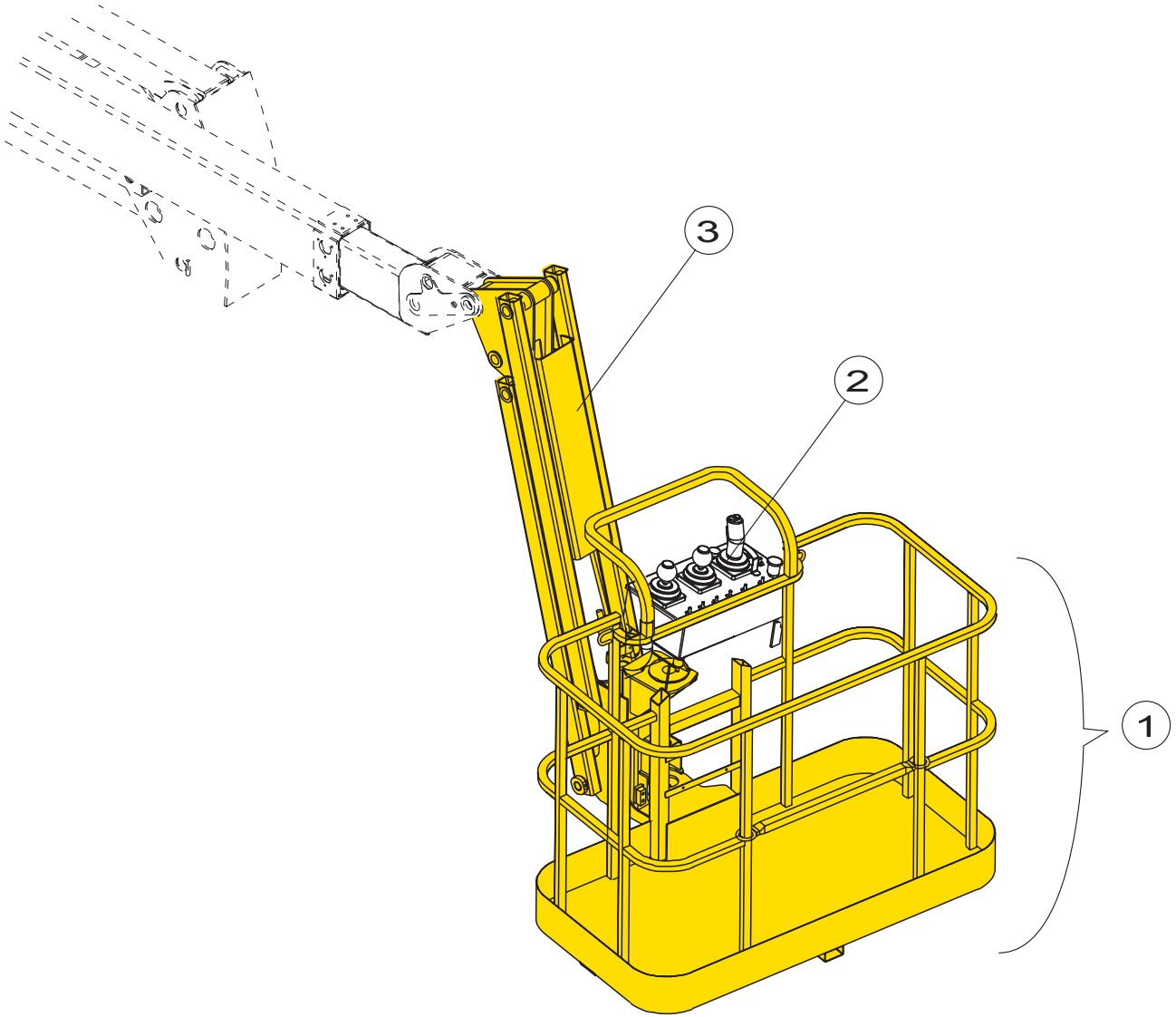


P21383 a

# ▲ NACELLE + PENDULAIRE
# PLATFORM + JIB

◀ D ▶

| Rep. | Désignation | Designation | Specification | Up to / jusqu'à |
|---|---|---|---|---|
| 1 | NACELLE PESAGE-ROTATION | PLATFORM WITH WEIGHING-ROTATION | | |
| 2 | ELECTRICITÉ NACELLE | PLATFORM ELECTRICITY | | |
| 3 | PENDULAIRE | PENDULAR | | |
| | | | | |
| | | | | |
| | | | | |
| | | | | |
| | | | | |
| | | | | |
| | | | | |
| | | | | |
| | | | | |
| | | | | |
| | | | | |
| | | | | |
| | | | | |
| | | | | |
| | | | | |
| | | | | |
| | | | | |
| | | | | |
| | | | | |
| | | | | |
| | | | | |
| | | | | |
| | | | | |

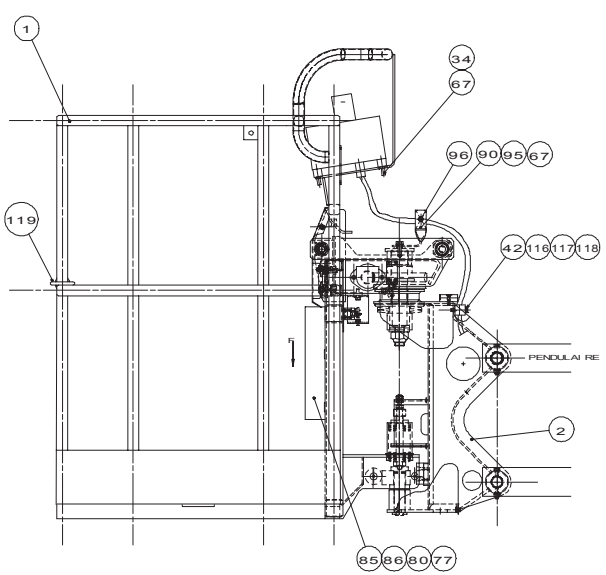
1
34
67
96
90
95
67
119
42
116
117
118
PENDULAIRE
2
85
86
80
77

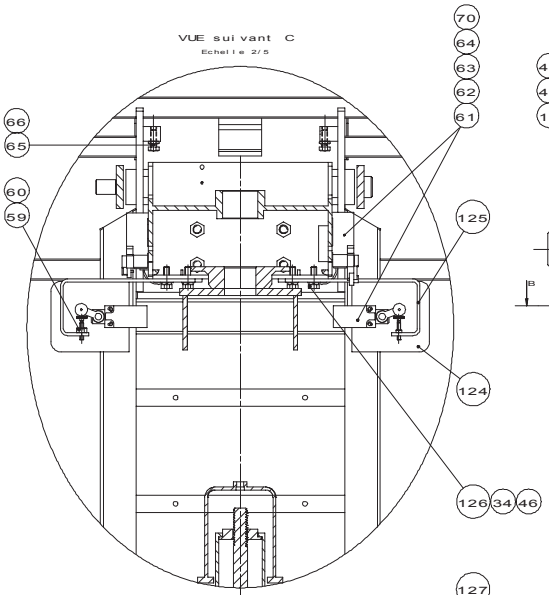
VUE suivant C
Echelle 2/5
70
64
63
62
61
66
65
60
59
125
124
126
34
46

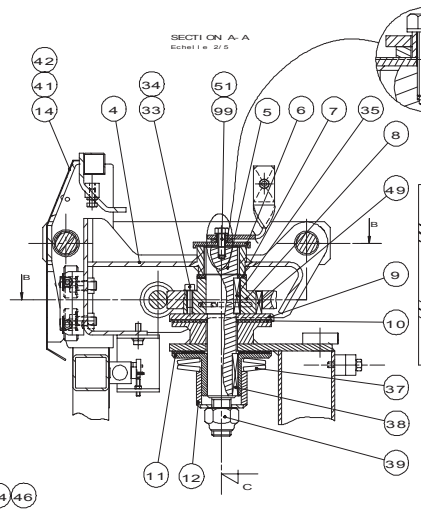
SECTION A-A
Echelle 2/5
100
101
42
41
14
34
4
33
51
99
5
6
7
35
8
49
B
9
10
37
38
39
11
12
C

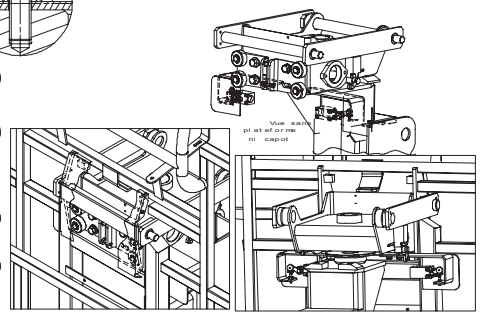
Vue sans plateforme ni capot

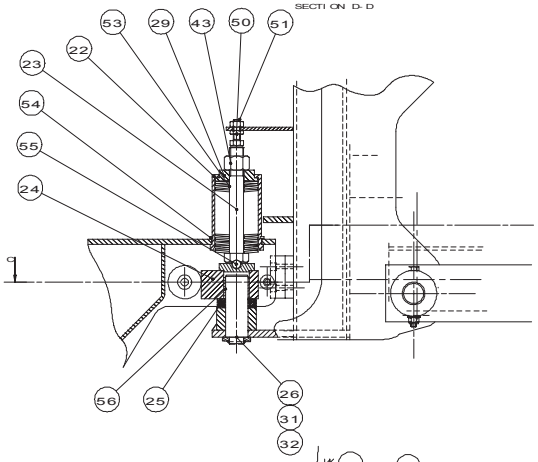
SECTION D-D
53
29
43
50
51
22
23
54
55
24
56
25
26
31
32

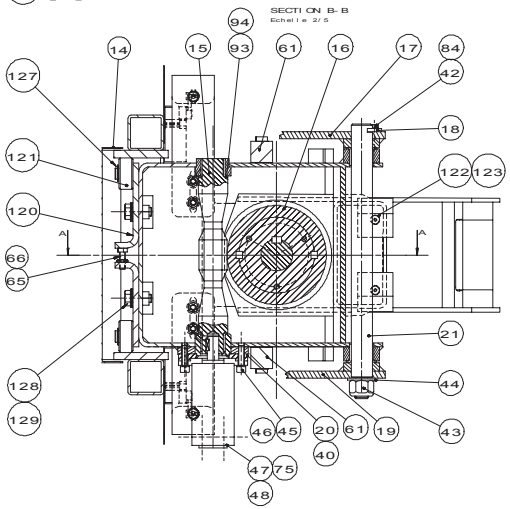
SECTION B-B
Echelle 2/5
94
14
15
93
61
16
17
84
42
127
18
121
122
123
120
A
66
65
21
128
129
44
46
45
20
61
19
43
40
47
75
48

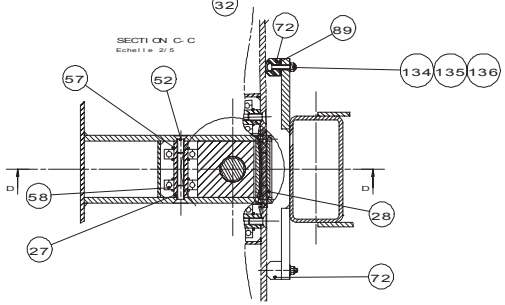
SECTION C-C
Echelle 2/5
72
89
134
135
136
57
52
D
58
28
27
72

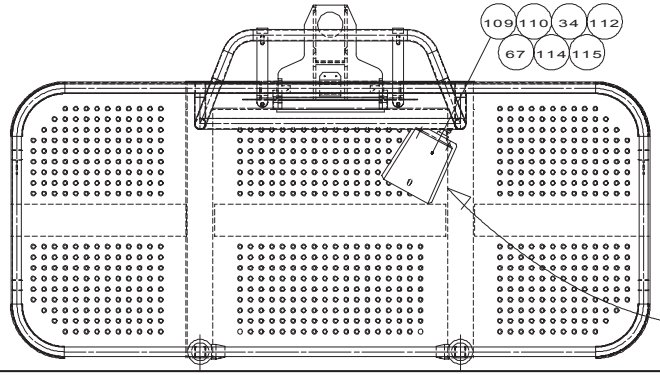
109
110
34
112
67
114
115

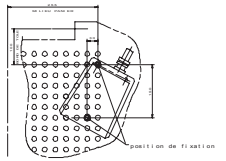
position de fixation

P20120 k

# NACELLE PESAGE-ROTATION
# PLATFORM WITH WEIGHING-ROTATION



| Rep. | Désignation | Designation | Specification | Qty | Code | Up to / jusqu'à |
|---|---|---|---|---|---|---|
| 1 | PLATE-FORME | PLATFORM | 1800X800 | 1 | 179P201030 | |
| *83* | *BAGUE À COLLERETTE* | *FLANGED BEARING BUSH* | *30X34X26 DU* | *2* | *2390150190* | |
| 2 | SUPPORT PLATEFORME | PLATFORM SUPPORT | RENFORCE | 1 | 179P237600 | |
| 4 | PIÈCE LIAISON PLAT-COM. | CONTROL PLATFORM CONNECTOR | | 1 | 179P204950 | |
| *83* | *BAGUE À COLLERETTE* | *FLANGED BEARING BUSH* | *30X34X26 DU* | *3* | *2390150190* | |
| *85* | *BAGUE* | *RING* | *MB 45-40 DU* | *1* | *2390150380* | |
| 5 | AXE ARTICULATION CENTRAL | CENTRE HINGE BOLT | | 1 | 148C137190 | |
| 6 | CAPUCHON | CAP | | 1 | 148D155860 | |
| 7 | RONDELLE | WASHER | | 1 | 148D154610 | |
| 8 | MOYEU CPLE. VIS SANS FIN | WORM AND TORQUE HUB | | 1 | 148C137170 | |
| 9 | DISQUE | DISK | | 1 | 148D154590 | |
| 10 | PATIN FERRODO | | FERRODO Ø140X42 4MM | 1 | 148D154620 | |
| 11 | PLATEAU PORTE GARNITURE | LINING HOLDER PLATE | | 1 | 148C137210 | |
| 12 | DOUILLE | SOCKET | | 1 | 148D154660 | |
| 14 | CAPOT PROTECTION REGLAGE | | | 1 | 179P204920 | |
| 15 | VIS SANS FIN | WORM SCREW | | 1 | 148C136790 | |
| 16 | ROUE TANGENTE | WORM WHEEL | 45 DENTS RAPPORT 1/45 | 1 | 148P210900 | |
| 17 | BIELLETTE DROITE | RIGHT LINK | | 1 | 148C137180 | |
| 18 | PLAQUETTE ARRÊT D'AXE | PIN STOP PLATE | | 2 | 148D154600 | |
| 19 | BIELLETTE GAUCHE | LEFT LINK | | 1 | 148C137200 | |
| 20 | BRIDE DE FIXATION MOTEUR | MOUNTING FLANGE (MOTOR) | | 1 | 148C137150 | |
| *40* | *BAGUE À COLLERETTE* | *FLANGED BEARING BUSH* | *30X34X26 DU* | *1* | *2390150190* | |
| *83* | *BAGUE À COLLERETTE* | *FLANGED BEARING BUSH* | *30X34X26 DU* | *1* | *2390150190* | |
| 21 | AXE D'ARTICULATION | BOLT | | 2 | 148C137230 | |
| 22 | BOITIER A RONDELLE | | | 1 | 148D154630 | |
| 23 | VIS DE REGLAGE | | | 1 | 148D154640 | |

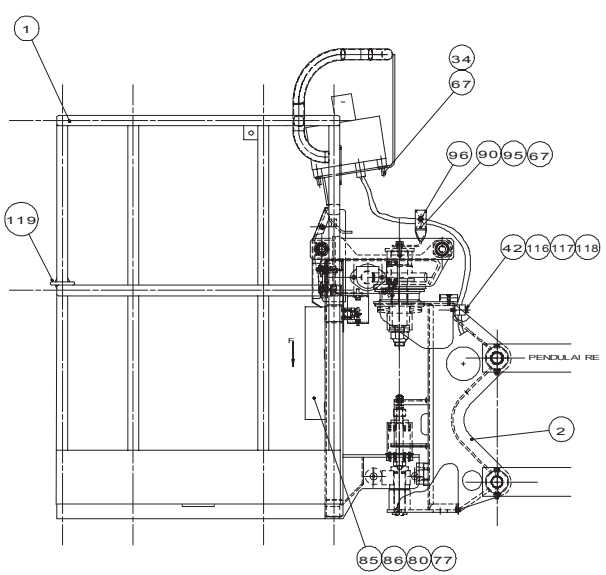
1
34
67
96
90
95
67
119
42
116
117
118
PENDULAIRE
2
85
86
80
77

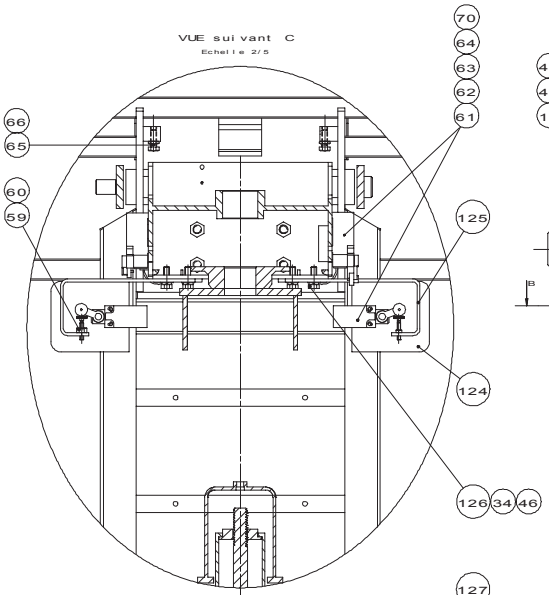
VUE suivant C
Echelle 2/5
70
64
63
62
61
66
65
60
59
125
124
126
34
46

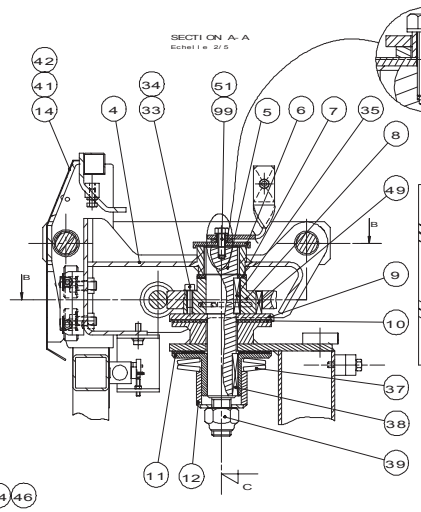
SECTION A-A
Echelle 2/5
100
101
42
41
14
34
4
33
51
99
5
6
7
35
8
49
B
9
10
37
38
39
11
12
C

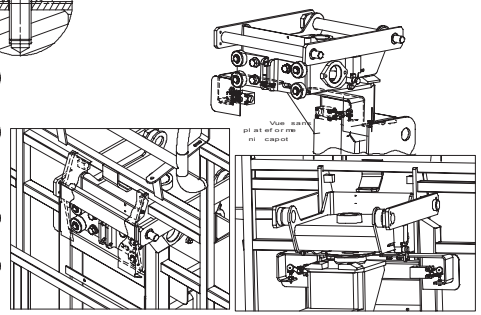
Vue sans plateforme ni capot

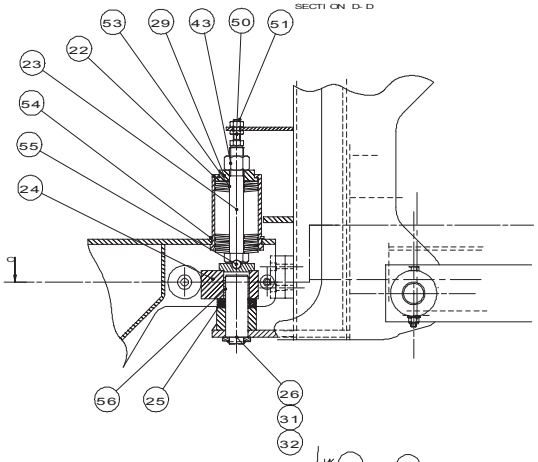
SECTION D-D
53
29
43
50
51
22
23
54
55
24
56
25
26
31
32

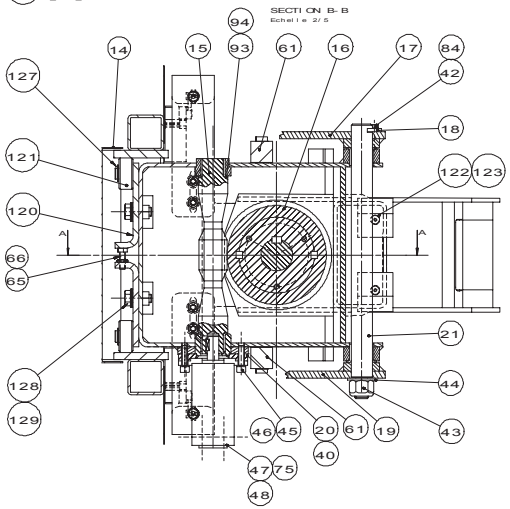
SECTION B-B
Echelle 2/5
94
14
15
93
61
16
17
84
42
127
18
121
122
123
120
A
66
65
21
128
129
44
46
45
20
61
19
43
40
47
75
48

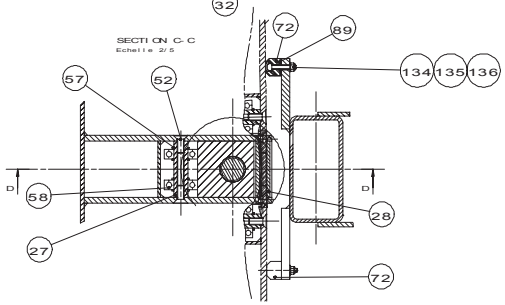
SECTION C-C
Echelle 2/5
72
89
134
135
136
57
52
D
58
28
27
72

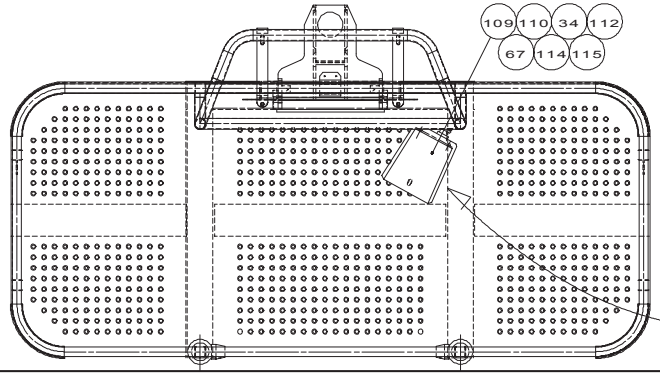
109
110
34
112
67
114
115

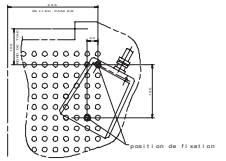
position de fixation

P20120 k

# ▲ NACELLE PESAGE-ROTATION
# PLATFORM WITH WEIGHING-ROTATION



| Rep. | Désignation | Designation | Specification | Qty | Code | Up to / jusqu'à |
|---|---|---|---|---|---|---|
| 24 | BUTÉE | STOP | | 1 | 116C127290 | |
| *56* | *BAGUE* | *RING* | *PM 32X30 DX* | *1* | *2390150540* | |
| *86* | *BAGUE* | *RING* | *MB 32-30 DU* | *1* | *2390150070* | |
| 25 | RONDELLE | WASHER | NYLATRON S5820 | 1 | 116D147380 | |
| 26 | AXE DE PIVOT INFÉRIEUR | BOTTOM PIVOTING AXIS | | 1 | 178P208670 | |
| 27 | AXE DE ROULEMENT | BEARING PIN | | 1 | 116D147350 | |
| 28 | ENTRETOISE | BRACE | | 1 | 116D147360 | |
| 29 | BAGUE DE BUTÉE | THRUST COLLAR | | 1 | 1460140650 | |
| 31 | VIS | SCREW | H M10X16-16 CL.8.8 ZB | 2 | 2331231510 | |
| 32 | RONDELLE À DENTS | TOOTH LOCK WASHER | DEC 10 ZB | 3 | 2351301110 | |
| 33 | VIS | SCREW | CHC M8X25-25 CL.8,8 ZB | 3 | 2308231700 | |
| 34 | RONDELLE PLATE | FLAT WASHER | M 8 ZB | 14 | 2351112070 | |
| 35 | CLAVETTE PARALLÈLE | WOODRUFF KEY | 14 X 9 X 50 | 1 | 2353104610 | |
| 37 | RONDELLE RESSORT CONIQUE | CONICAL SPRING WASHER | 61-125-6 | 2 | 2351901220 | |
| 38 | CLAVETTE PARALLÈLE | WOODRUFF KEY | 12 X 8 X 60 | 1 | 2353104630 | |
| 39 | ECROU FREIN | LOCK NUT | 27X200 CL.6 | 1 | 2349222350 | |
| 41 | VIS | SCREW | H M6X10-10 CL.8.8 ZB | 4 | 2331231300 | |
| 42 | RONDELLE À DENTS | TOOTH LOCK WASHER | DEC 6 ZB | 15 | 2351301070 | |
| 43 | ECROU AUTOFREINÉ | SELF-LOCKED NUT | H FR M20 CL. 8 ZB | 3 | 2349221550 | |
| 44 | RONDELLE PLATE | FLAT WASHER | M 20 ZB | 2 | 2351112150 | |
| 45 | VIS | SCREW | CHC M8X30-28 CL.8,8 ZB | 2 | 2308231710 | |
| 46 | RONDELLE ÉLASTIQUE | RUBBER WASHER | W 8 ZB | 6 | 2351201070 | |
| 47 | MOTEUR | MOTOR | EPMMS32C | 1 | 2431203300 | |
| | *POCHETTE DE JOINTS* | *BAG OF SEALS* | | *1* | *2421692900* | |
| | *POCHETTE DE JOINTS* | *BAG OF SEALS* | | *1* | *2421693900* | |
| 48 | BRIDE | FLANGE | DE MONTAGE MOTEUR | 1 | 2420204880 | |

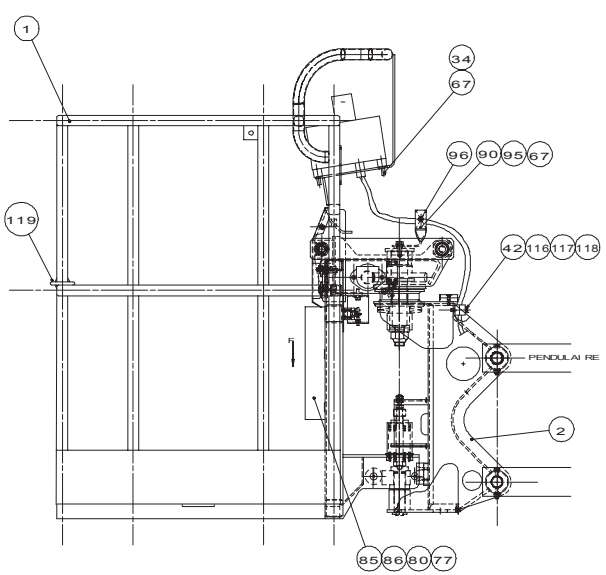
1
34
67
96
90
95
67
119
42
116
117
118
PENDULAIRE
2
85
86
80
77

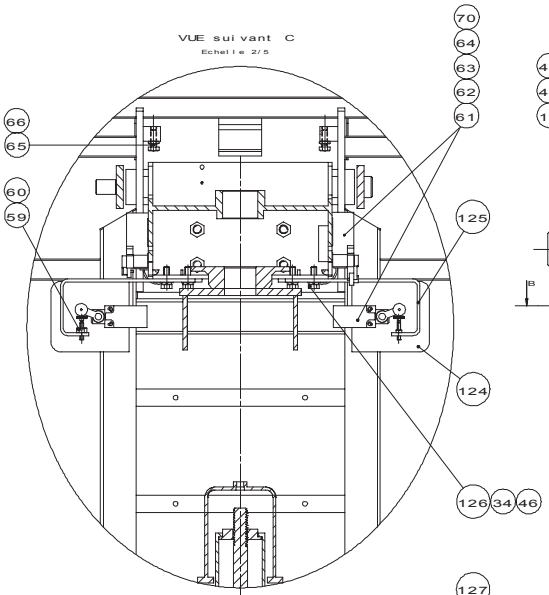
VUE suivant C
Echelle 2/5
70
64
63
62
61
66
65
60
59
125
124
126
34
46

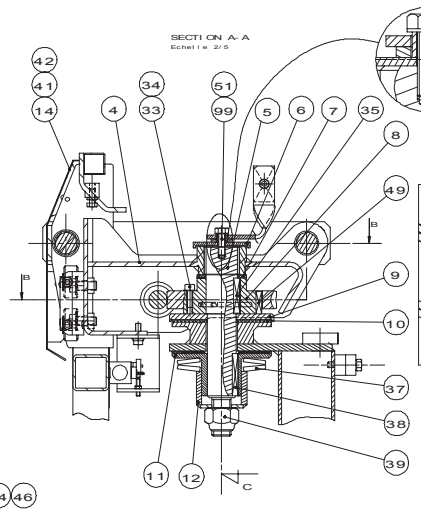
SECTION A-A
Echelle 2/5
100
101
42
41
14
34
4
33
51
99
5
6
7
35
8
49
B
9
10
37
38
39
11
12
C

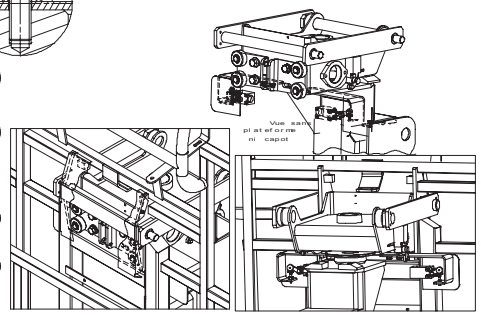
Vue sans plateforme ni capot

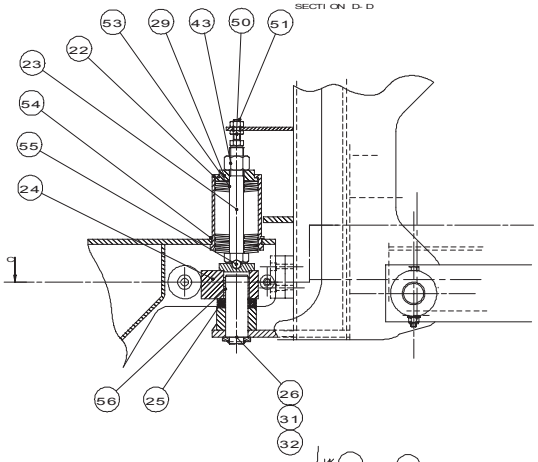
SECTION D-D
53
29
43
50
51
22
23
54
55
24
56
25
26
31
32

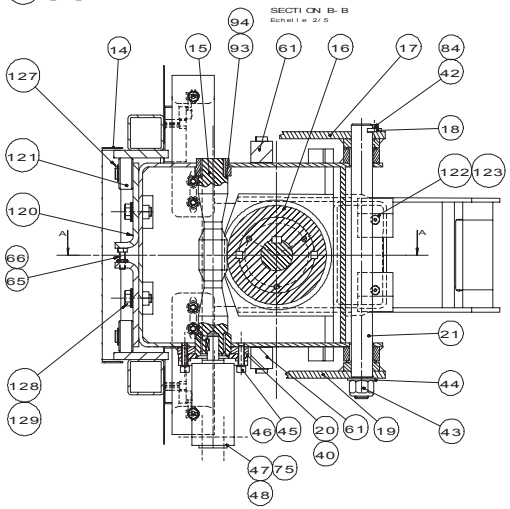
SECTION B-B
Echelle 2/5
94
14
15
93
61
16
17
84
42
127
18
121
122
123
120
A
66
65
21
128
129
44
46
45
20
61
19
43
40
47
75
48

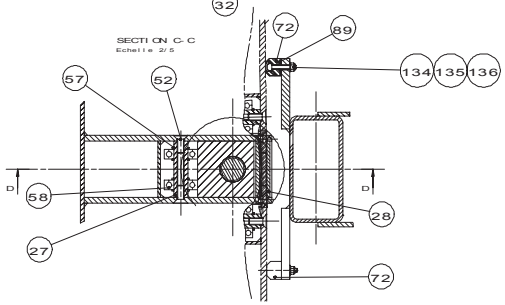
SECTION C-C
Echelle 2/5
72
89
134
135
136
57
52
D
58
28
27
72

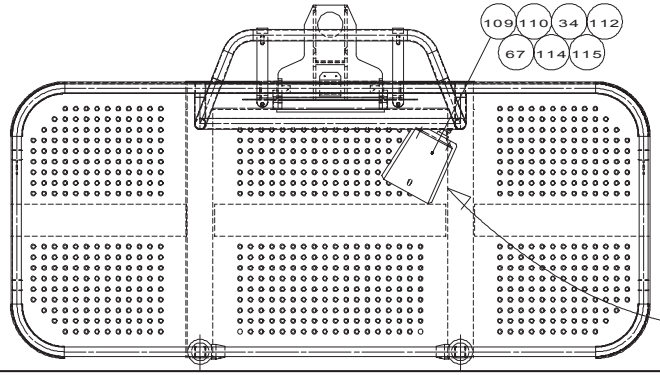
109
110
34
112
67
114
115

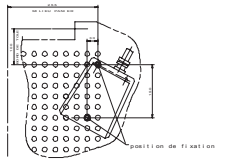
position de fixation

P20120 k

# NACELLE PESAGE-ROTATION
# PLATFORM WITH WEIGHING-ROTATION

D1
3/5

| Rep. | Désignation | Designation | Specification | Qty | Code | Up to / jusqu'à |
|---|---|---|---|---|---|---|
| 49 | CLAVETTE PARALLÈLE | WOODRUFF KEY | 10 X 8 X 32 | 2 | 2353104250 | |
| 50 | ECROU BAS | THIN NUT | HM M10 CL. 4 ZB | 1 | 2341222040 | |
| 51 | VIS | SCREW | H M10X30-30 CL.8.8 ZB | 2 | 2331231540 | |
| 52 | VIS | SCREW | FHC M10X30-30 CL.10.9 DC | 4 | 2337331020 | |
| 53 | RONDELLE | WASHER | Ø60X20,4X2,5 DACROMET | 27 | 2351901190 | |
| 54 | ANNEAU ÉLASTIQUE ARBRE | ELASTIC SHAFT RING | 70X2,5 | 1 | 2472001570 | |
| 55 | BILLE | BALL | RB 12 | 1 | 2420201480 | |
| 57 | ANNEAU ÉLASTIQUE ARBRE | ELASTIC SHAFT RING | 20X1,2 | 4 | 2472001170 | |
| 58 | ROULEMENT À BILLE | BALL BEARING | 20X47X14 | 2 | 2451434050 | |
| 59 | ECROU | NUT | H M5 CL. 8 ZB | 2 | 2341221040 | |
| 60 | VIS À TÊTE MOLETÉE BASSE | LOW-HEADED KNURLED SCREW | M5X30 CL. 8.8 ZB | 2 | 2301232950 | |
| 62 | VIS | SCREW | CHC M4X35-20 CL.8,8 ZB | 8 | 2308231220 | |
| 63 | RONDELLE PLATE | FLAT WASHER | M 4 ZB | 12 | 2351112030 | |
| 64 | ECROU AUTOFREINÉ | SELF-LOCKED NUT | H FR M4 CL. 8 ZB | 4 | 2349221480 | |
| 65 | VIS | SCREW | H M8X35-35 CL.8.8 ZB | 4 | 2331235460 | |
| 66 | ECROU BAS | THIN NUT | HM M8 CL. 4 ZB | 4 | 2341222030 | |
| 67 | ECROU AUTOFREINÉ | SELF-LOCKED NUT | H FR M8 CL. 8 ZB | 7 | 2349221500 | |
| 70 | PRESSE-ÉTOUPE | PACKING BOX | 13/9 | 4 | 2421607690 | |
| 72 | BUTÉE | STOP | | 2 | 178D158390 | |
| 75 | VIS | SCREW | FS M6X10 CL. 4.8 ZB | 3 | 2303329120 | |
| 77 | RONDELLE PLATE | FLAT WASHER | LL 6 ZB | 4 | 2351124050 | |
| 80 | ECROU | NUT | H M6 CL. 8 ZB | 4 | 2341221050 | |
| 84 | VIS | SCREW | H M6X16-16 CL.8.8 ZB | 8 | 2331231310 | |
| 85 | BOÎTE À DOCUMENTS | DOCUMENT BOX | MANUAL-PAK CP 9000,08 | 1 | 2420209920 | |
| 86 | VIS POÊLIER FENDUE | SLOTTED SCREW | RLS M6X16 CL.4.8 ZB | 4 | 2420202920 | |
| 89 | CALE DE REGLAGE | | | 1 | 178D159440 | |

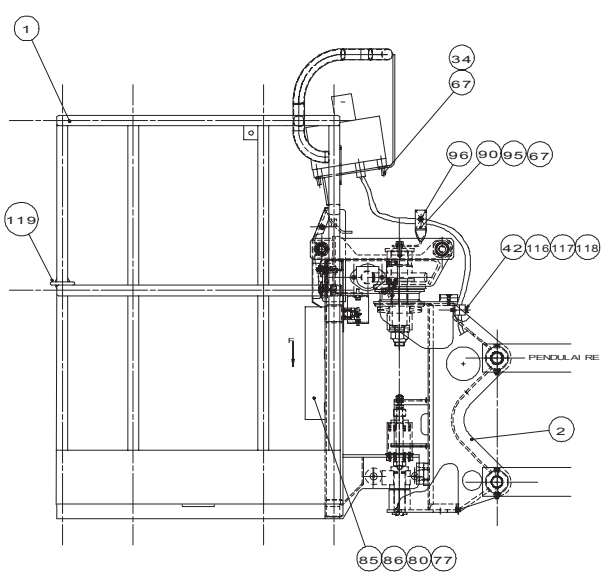
1
34
67
96
90
95
67
119
42
116
117
118
PENDULAIRE
2
85
86
80
77

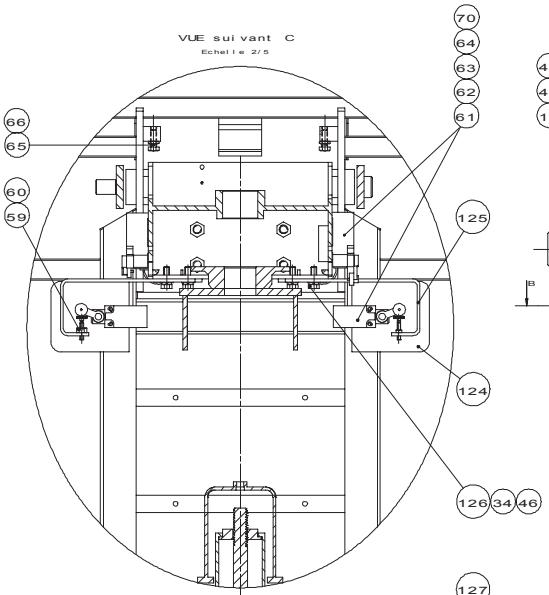
VUE suivant C
Echelle 2/5
70
64
63
62
61
66
65
60
59
125
124
126
34
46

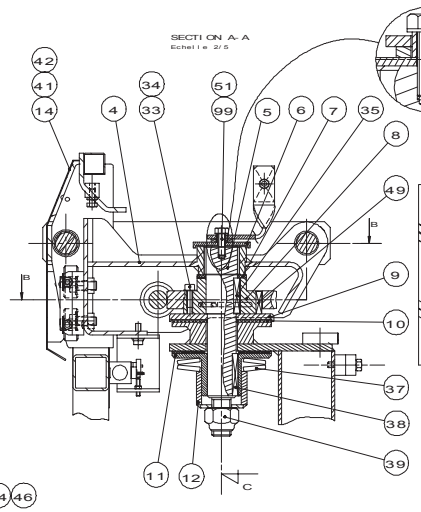
SECTION A-A
Echelle 2/5
100
101
42
41
14
34
4
33
51
99
5
6
7
35
8
49
B
9
10
37
38
39
11
12
C

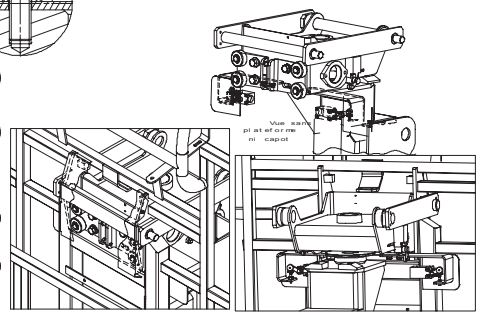
Vue sans plateforme ni capot

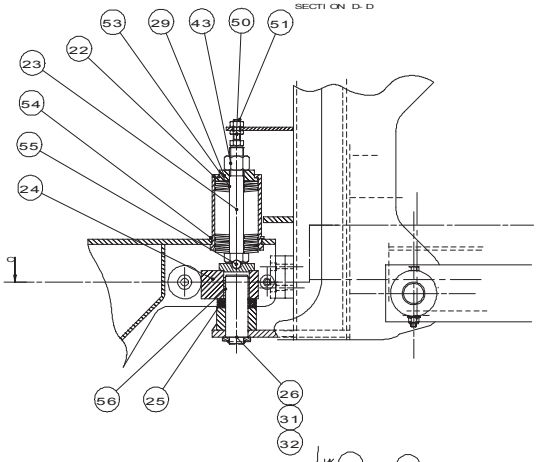
SECTION D-D
53
29
43
50
51
22
23
54
55
24
56
25
26
31
32

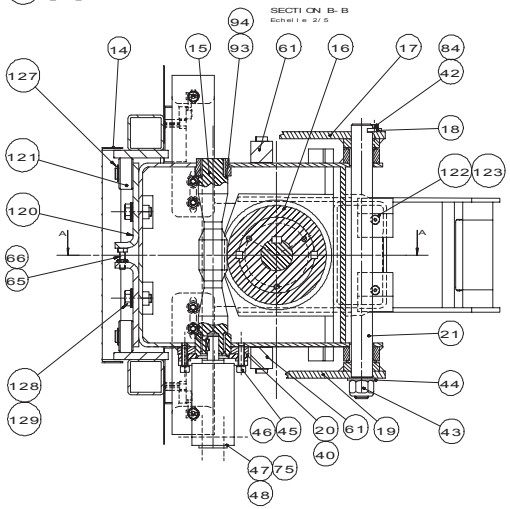
SECTION B-B
Echelle 2/5
94
14
15
93
61
16
17
84
42
127
18
121
122
123
120
A
66
65
21
128
129
44
46
45
20
61
19
43
40
47
75
48

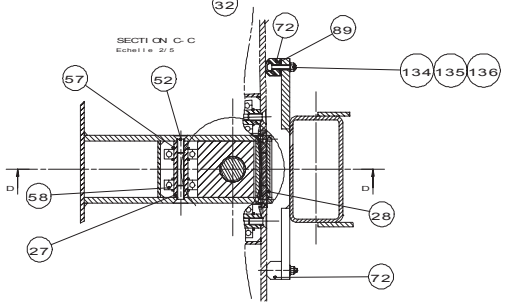
SECTION C-C
Echelle 2/5
72
89
134
135
136
57
52
D
58
28
27
72

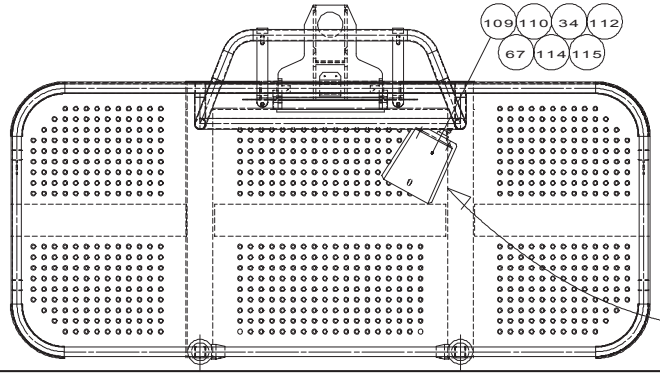
109
110
34
112
67
114
115

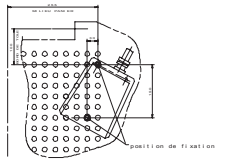
position de fixation

P20120 k

# ▲ NACELLE PESAGE-ROTATION
# PLATFORM WITH WEIGHING-ROTATION



| Rep. | Désignation | Designation | Specification | Qty | Code | Up to / jusqu'à |
|---|---|---|---|---|---|---|
| 90 | COLLIER SÉRIE DOUBLE | CHAIN (DOUBLE SERIES) | 216/12.7 -PP GD | 2 | 2700300190 | |
| 93 | RONDELLE D'AJUSTAGE | ADJUSTING WASHER | Ø30X42-0,1 | 1 | 2351902450 | |
| 94 | RONDELLE D'AJUSTAGE | ADJUSTING WASHER | Ø30X42-0,5 | 1 | 2351902460 | |
| 95 | VIS | SCREW | H M8X80-22 CL.8.8 ZB | 1 | 2301231750 | |
| 96 | SUPPORT COLLIER FLEXIBLE | FLEXIBLE CHAIN SUPPORT | COLLIER FLEXIBLE | 1 | 134C165420 | |
| 100 | ENTRETOISE | BRACE | | 1 | 134D165850 | |
| 101 | RONDELLE | WASHER | D'ENTRETOISE | 1 | 134D165840 | |
| 109 | PÉDALE | PEDAL | AVEC CAPOT | 1 | 2441608180 | |
| 110 | VIS | SCREW | H M8X35-22 CL.8.8 ZB | 2 | 2301231660 | |
| 112 | RONDELLE PLATE | FLAT WASHER | LL 8 ZB | 2 | 2351124070 | |
| 114 | RÉDUCTEUR | REDUCER | 16/13 REF G161002 | 1 | 2421801160 | |
| 115 | PRESSE-ÉTOUPE RÉDUCTEUR | REDUCER PACKING BOX | 13/7 | 1 | 2441613010 | |
| 116 | VIS | SCREW | H M6X60-60 CL.8.8 ZB | 2 | 2331231390 | |
| 117 | PATIN | PAD | | 1 | 137P201560 | |
| 118 | PLAT DE SERRAGE | TIGHTENING IRON | | 1 | 137P201570 | |
| 119 | BAGUE DE GUIDAGE | GUIDE RING | | 2 | 137P204250 | |
| 120 | PATE DE REGLAGE PESAGE | | | 2 | 179P204690 | |
| 121 | GALET | ROLLER | | 4 | 196D160350 | |
| 122 | PATIN DÉTECTEUR ROTATION | ROTATION DETECTOR PAD | | 2 | 178P208620 | |
| 123 | VIS | SCREW | FHC M6X25-25 CL.10.9 DC | 2 | 2307331510 | |
| 124 | CAPOT DETECTEUR NACELLE | | | 2 | 179P205710 | |
| 125 | SUPPORT MOLETTE DETECTEU | | | 2 | 179P205700 | |
| 126 | VIS | SCREW | H M8X16-16 CL.8.8 ZB | 4 | 2331231400 | |
| 127 | ANNEAU | RING | TRUARC E16 TYPE 863 | 4 | 2420105090 | |
| 128 | VIS | SCREW | H M12X35-35 CL.8.8 ZB | 4 | 2331231770 | |
| 129 | RONDELLE | WASHER | NL 12 ZB | 4 | 2351902940 | |

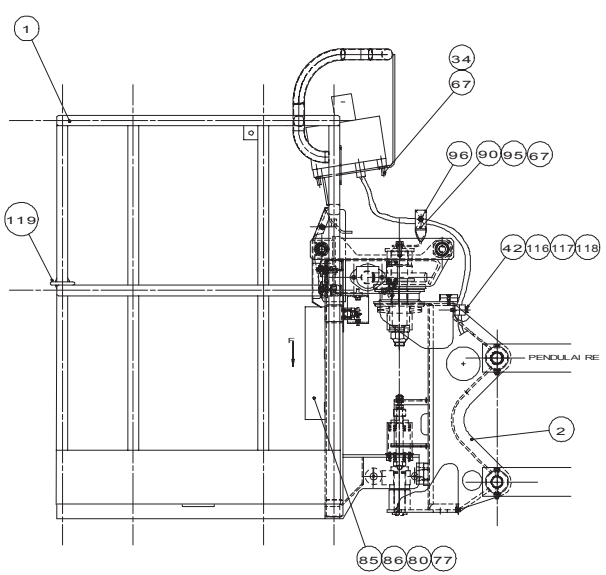
1
34
67
96
90
95
67
119
42
116
117
118
PENDULAIRE
2
85
86
80
77

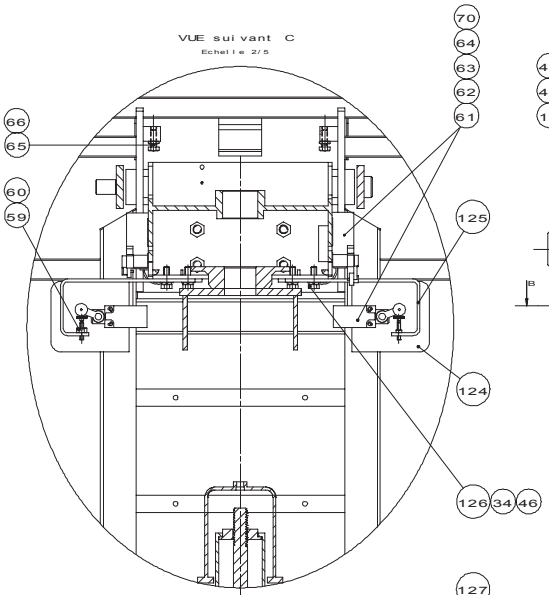
VUE suivant C
Echelle 2/5
70
64
63
62
61
66
65
60
59
125
124
126
34
46

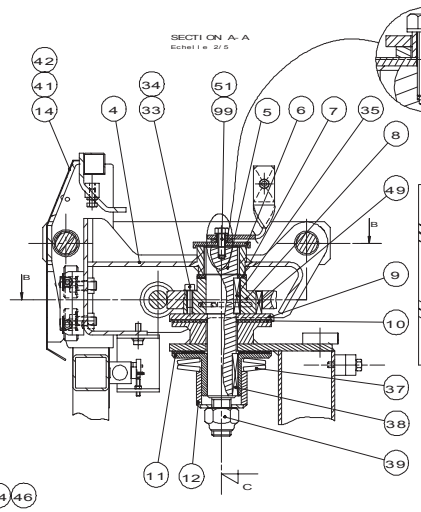
SECTION A-A
Echelle 2/5
100
101
42
41
14
34
4
33
51
99
5
6
7
35
8
49
B
9
10
37
38
39
11
12
C

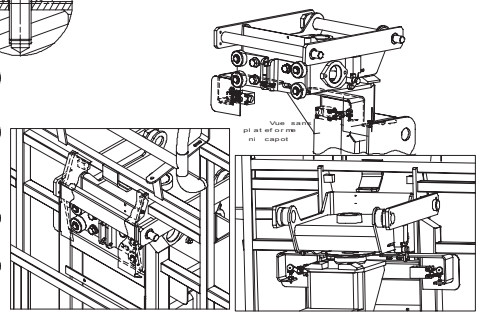
Vue sans plateforme ni capot

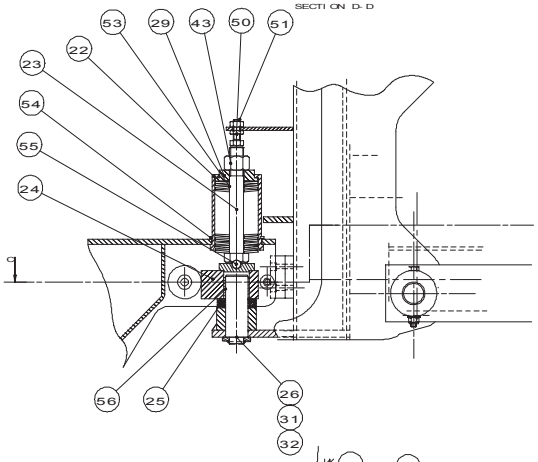
SECTION D-D
53
29
43
50
51
22
23
54
55
24
56
25
26
31
32

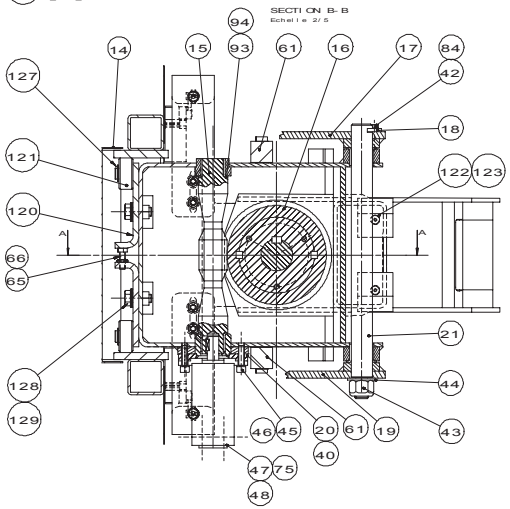
SECTION B-B
Echelle 2/5
94
14
15
93
61
16
17
84
42
127
18
121
122
123
120
A
66
65
21
128
129
44
46
45
20
61
19
43
40
47
75
48

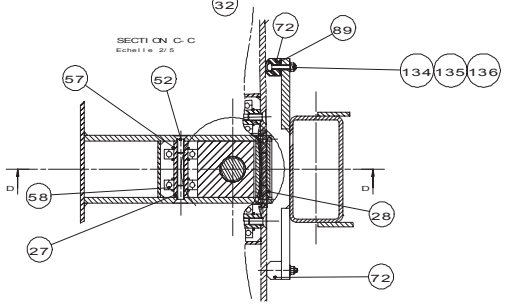
SECTION C-C
Echelle 2/5
72
89
134
135
136
57
52
D
58
28
27
72

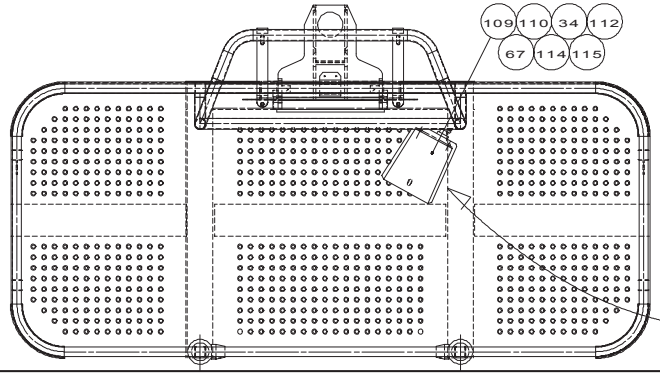
109
110
34
112
67
114
115

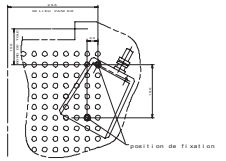
position de fixation

P20120 k

# NACELLE PESAGE-ROTATION
# PLATFORM WITH WEIGHING-ROTATION



| Rep. | Désignation | Designation | Specification | Qty | Code | Up to / jusqu'à |
|---|---|---|---|---|---|---|
| 134 | VIS | SCREW | CHC M6X35-24 CL.8,8 ZB | 4 | 2308231520 | |
| 135 | RONDELLE PLATE | FLAT WASHER | L 6 ZB | 4 | 2351123050 | |
| 136 | ECROU AUTOFREINÉ | SELF-LOCKED NUT | H FR M6 CL. 8 ZB | 4 | 2349221490 | |

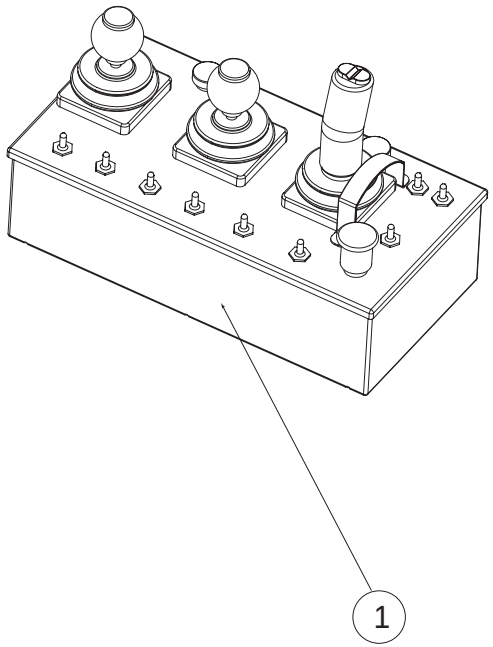


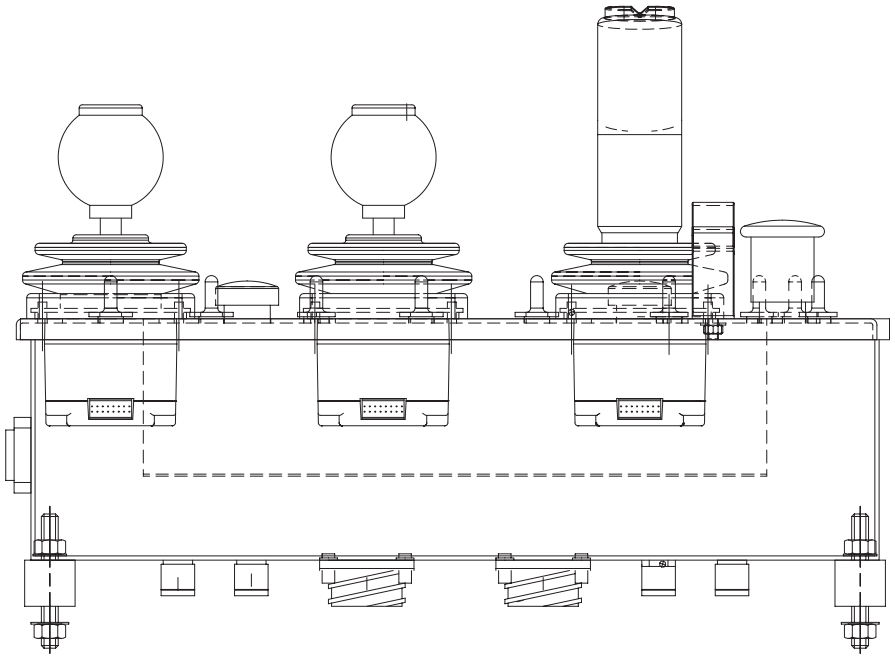

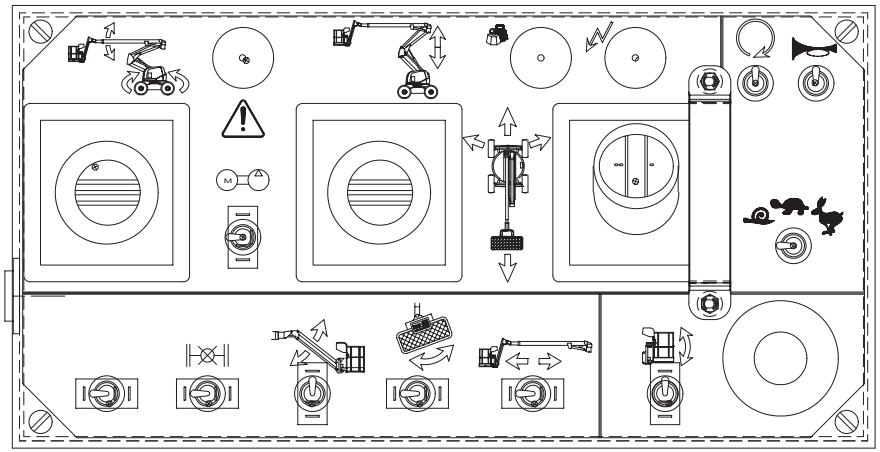

Coffret nacelle HA16/18SPX

# ELECTRICITÉ NACELLE
# PLATFORM ELECTRICITY

◀ D2 ▶

| Rep. | Désignation | Designation | Specification | Qty | Code | Up to / jusqu'à |
|---|---|---|---|---|---|---|
| 1 | COFFRET NACELLE | PLATFORM CABINET | | 1 | 180P214330 | |
| | | | | | | |
| | | | | | | |
| | | | | | | |
| | | | | | | |
| | | | | | | |
| | | | | | | |
| | | | | | | |
| | | | | | | |
| | | | | | | |
| | | | | | | |
| | | | | | | |
| | | | | | | |
| | | | | | | |
| | | | | | | |
| | | | | | | |
| | | | | | | |
| | | | | | | |
| | | | | | | |
| | | | | | | |
| | | | | | | |
| | | | | | | |
| | | | | | | |
| | | | | | | |
| | | | | | | |
| | | | | | | |
| | | | | | | |

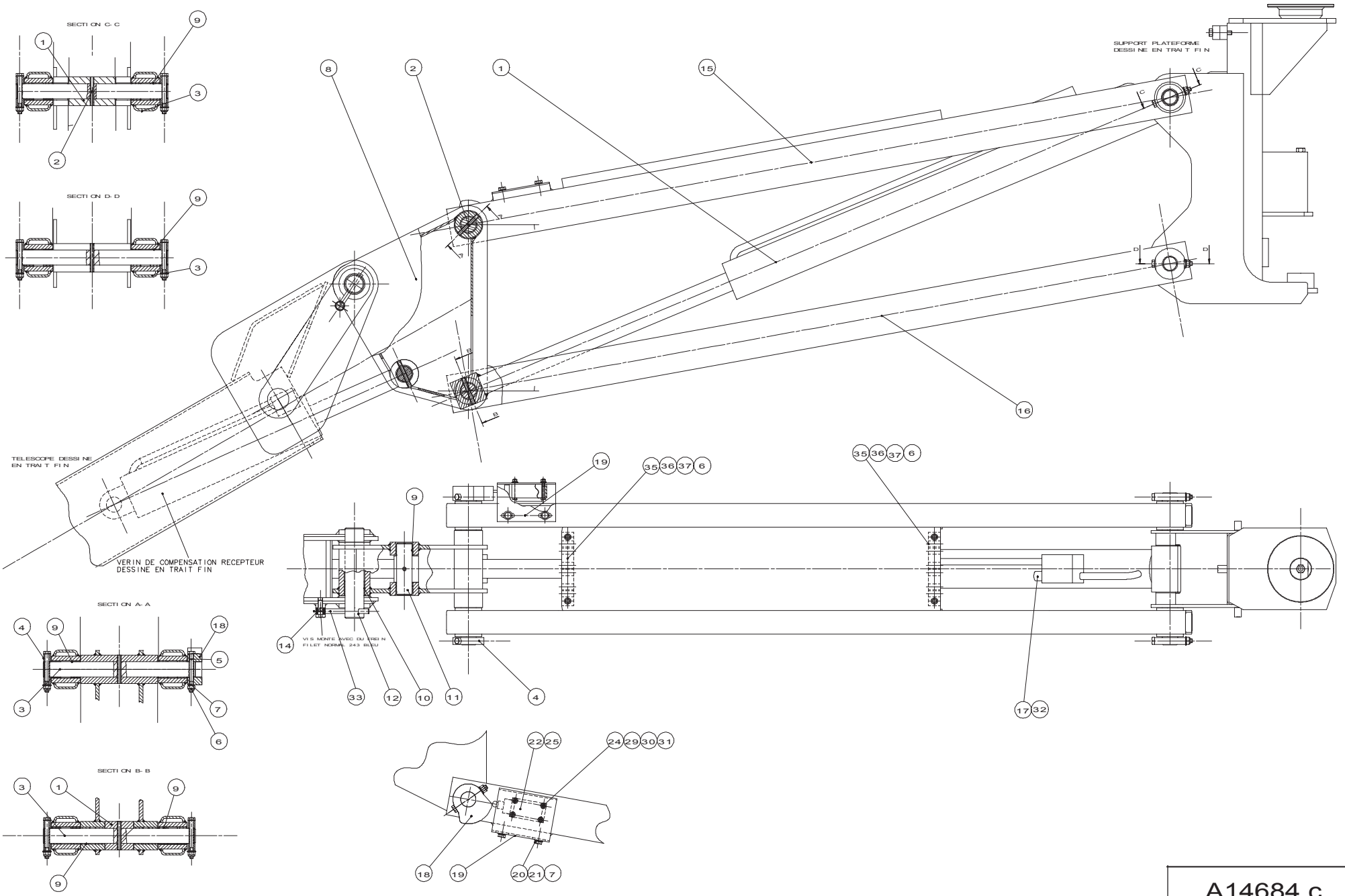
SECTION C-C
SECTION D-D
SECTION A-A
SECTION B-B
SUPPORT PLATEFORME DESSINE EN TRAIT FIN
TELESCOPE DESSINE EN TRAIT FIN
VERIN DE COMPENSATION RECEPTEUR DESSINE EN TRAIT FIN
VIS MONTE AVEC DU FREIN FILET NORMAL 243 BLEU

A14684 c

# ▲ PENDULAIRE
# PENDULAR



| Rep. | Désignation | Designation | Specification | Qty | Code | Up to / jusqu'à |
|---|---|---|---|---|---|---|
| 1 | VERIN PENDULAIRE | JIB CYLINDER | | 1 | 178C141930 | |
| | *VALVE D'ÉQUILIBRAGE* | *BALANCING VALVE* | *CBBA-LHN 210B* | *0* | *2422204860* | |
| | *CLAPET ANTI-RETR PILOTÉ* | *PILOT-OPERATED CHECK VALVE* | | *0* | *2426602510* | |
| | *VÉRIN RELEVAGE PENDULAIR* | *PENDULAR RAISING CYLINDER* | *HES* | *1* | *178C141930* | |
| | *VÉRIN RELEVAGE PENDULAIR* | *PENDULAR RAISING CYLINDER* | *BURNSIDE* | *1* | *178C141930* | |
| | *POCHETTE DE JOINTS* | *BAG OF SEALS* | | *1* | *2421692660* | |
| 2 | GOUPILLE ÉLASTIQUE | FLEXIBLE PIN | E 8-60 | 5 | 2352212510 | |
| 3 | AXE D'ARTICULATION BRAS | ARM HINGE PIN | | 4 | 178C142210 | |
| 4 | BAGUE D'ARRÊT | FIXING COLLAR | | 7 | 178D158340 | |
| 5 | VIS | SCREW | H M8X80-22 CL.8.8 ZB | 8 | 2301231750 | |
| 6 | ECROU AUTOFREINÉ | SELF-LOCKED NUT | H FR M8 CL. 8 ZB | 12 | 2349221500 | |
| 7 | RONDELLE PLATE | FLAT WASHER | M 8 ZB | 10 | 2351112070 | |
| 8 | PIÈCE DE LIAISON PEND. | PENDULAR CONNECTOR | | 1 | 178B152230 | |
| | *BAGUE* | *RING* | *PM 3220 DX* | *6* | *2390150770* | |
| | *BAGUE* | *RING* | *PM 40/30 DX SIC* | *2* | *2390150450* | |
| 11 | AXE NEZ DE VÉRIN | CYLINDER NOSE-PIECE PIN | | 1 | 178D158350 | |
| 12 | AXE ROT. PIÈCE LIAISON | ROTARY AXLE CONNECTOR PIECE | | 1 | 178D158370 | |
| 14 | VIS | SCREW | H M10X30-30 CL.8.8 ZB | 1 | 2331231540 | |
| 15 | BRAS HAUT PENDULAIRE | UPPER PENDULAR ARM | | 1 | 178B164240 | |
| | *BAGUE* | *RING* | *PM 3220 DX* | *8* | *2390150770* | |
| 16 | TIRANT BAS PENDULAIRE | LOWER PENDULAR TIE ROD | | 2 | 178B152260 | |
| | *BAGUE* | *RING* | *PM 3220 DX* | *4* | *2390150770* | |
| 18 | ARRÊT CAPTEUR | SENSOR STOP | | 1 | 178C144390 | |
| 19 | PLAQUE PROTECTION | | | 1 | 178C144410 | |
| 20 | VIS | SCREW | H M8X16-16 CL.8.8 ZB | 2 | 2331231400 | |
| 21 | RONDELLE À DENTS | TOOTH LOCK WASHER | DEC 8 ZB | 2 | 2351301090 | |

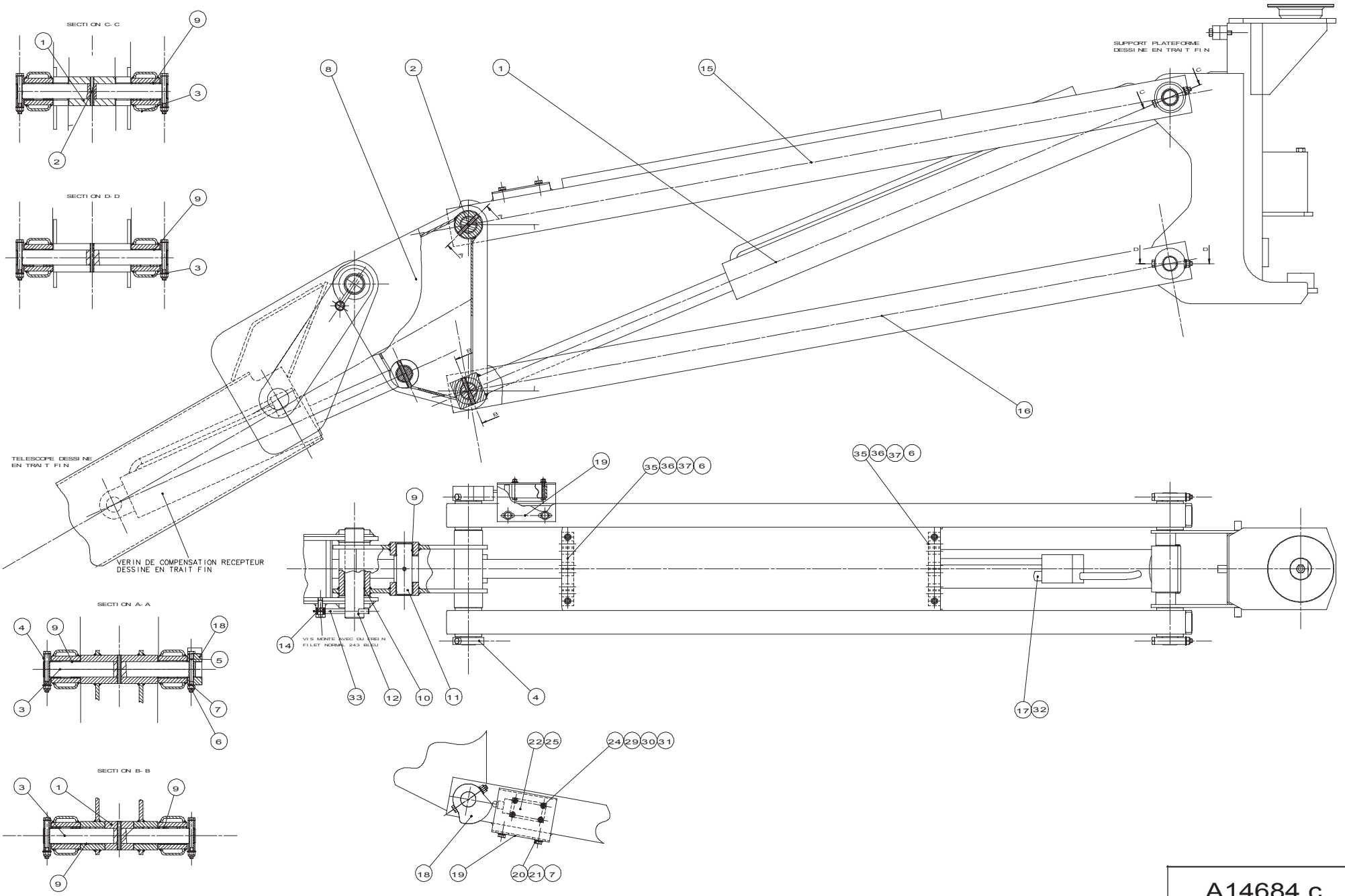
SECTION C-C
SECTION D-D
SECTION A-A
SECTION B-B
SUPPORT PLATEFORME DESSINE EN TRAIT FIN
TELESCOPE DESSINE EN TRAIT FIN
VERIN DE COMPENSATION RECEPTEUR DESSINE EN TRAIT FIN
VIS MONTE AVEC DU FREIN FILET NORMAL 243 BLEU

A14684 c

# PENDULAIRE
# PENDULAR



| Rep. | Désignation | Designation | Specification | Qty | Code | Up to / jusqu'à |
|---|---|---|---|---|---|---|
| 22 | INTERRUPTEUR POSITION | POSITION SWITCH | | 1 | 2440901520 | |
| 24 | VIS | SCREW | H M5X40-40 CL.8.8 ZB | 4 | 2331231250 | |
| 25 | PRESSE-ÉTOUPE RÉDUCTEUR | REDUCER PACKING BOX | 13/7 | 1 | 2441613010 | |
| 29 | RONDELLE PLATE | FLAT WASHER | M 5 ZB | 4 | 2351112040 | |
| 30 | RONDELLE À DENTS | TOOTH LOCK WASHER | DEC 5 ZB | 4 | 2351301060 | |
| 31 | ECROU | NUT | H M5 CL. 8 ZB | 4 | 2341221040 | |
| 33 | CHAPE MÂLE LISSE | SMOOTH MALE SLOT | | 1 | 132D154320 | |
| 35 | PATIN SERRAGE FLEXIBLES | | | 2 | 138P212370 | |
| 36 | PLAT DE SERRAGE FLEXIBLE | HOSE TIGHTENING IRON | | 2 | 178D164750 | |
| 37 | VIS | SCREW | H M8X45-22 CL.8.8 ZB | 4 | 2301231680 | |
| | | | | | | |
| | | | | | | |
| | | | | | | |
| | | | | | | |
| | | | | | | |
| | | | | | | |
| | | | | | | |
| | | | | | | |
| | | | | | | |
| | | | | | | |
| | | | | | | |
| | | | | | | |
| | | | | | | |
| | | | | | | |
| | | | | | | |

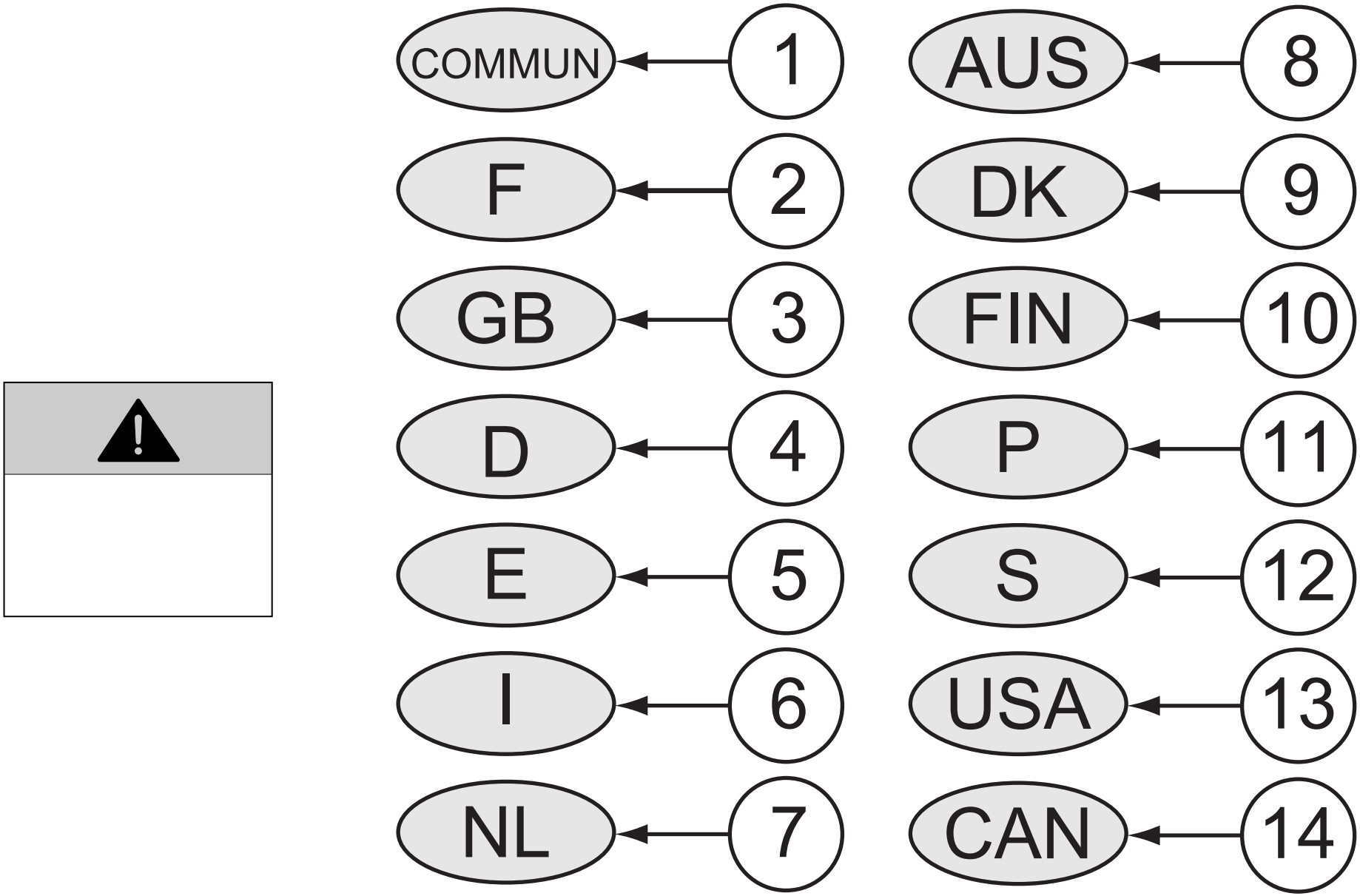
COMMUN
1
F
2
GB
3
D
4
E
5
I
6
NL
7
AUS
8
DK
9
FIN
10
P
11
S
12
USA
13
CAN
14
D16627 a

# ETIQUETTES
# LABELS

◀ G ▶

| Rep. | Désignation | Designation | Specification | Up to / jusqu'à |
|---|---|---|---|---|
| 1 | COMMUN SAUF USA / CANADA | COMMON EXCEPT USA / CANADA | | |
| 2 | FRANCE | FRANCE LABELS | | |
| 3 | GRANDE BRETAGNE | GB LABELS | | |
| 4 | ALLEMAGNE | RFA LABELS | | |
| 5 | ESPAGNE | SPAIN LABELS | | |
| 6 | ITALIE | ITALY LABELS | | |
| 7 | HOLLANDE | HOLLAND LABELS | | |
| 8 | AUSTRALIE | AUSTRALIA | | |
| 9 | DANEMARK | DENMARK LABELS | | |
| 10 | FINLANDE | FINLAND LABELS | | |
| 11 | PORTUGAL | PORTUGAL LABELS | | |
| 12 | SUEDE | | | |
| | | | | |
| | | | | |
| | | | | |
| | | | | |
| | | | | |
| | | | | |
| | | | | |
| | | | | |
| | | | | |
| | | | | |
| | | | | |
| | | | | |
| | | | | |
| | | | | |

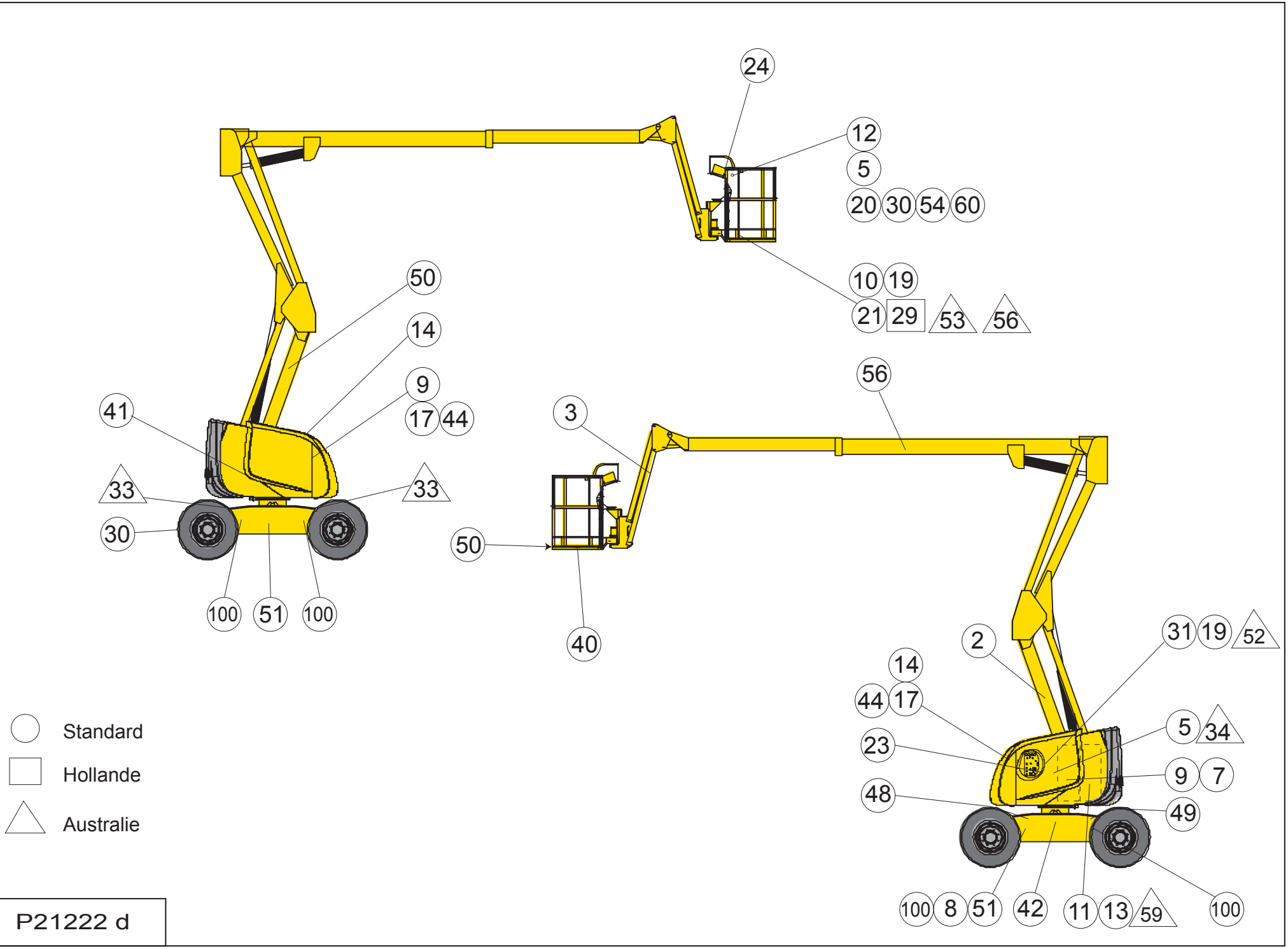
24
12
5
20 30 54 60
10 19
21 29 53 56
50
14
9
17 44
41
33
33
30
100 51 100
56
3
50
40
2
31 19 52
14
44 17
5 34
23
9 7
48
49
100 8 51 42 11 13 59 100
Standard
Hollande
Australie

P21222 d

## ▲ COMMUN SAUF USA / CANADA
## COMMON EXCEPT USA / CANADA

◀ G1 1/2 ▶

| Rep. | Désignation | Designation | Specification | Qty | Code | Up to / jusqu'à |
|---|---|---|---|---|---|---|
| 2 | GRAPHISME | LOGO | HA16SPX HORIZONTALE | 1 | 307P218200 | |
| 3 | GRAPHISME | LOGO | HA16SPX VERTICALE | 1 | 3078152130 | |
| 5 | HAUTEUR PLANCHER+CHARGE | FLOOR HEIGHT + LOAD LABEL | VENT 45 KMH | 2 | 307P205770 | |
| 9 | NE PAS STATIONNER | « DO NOT PARK » PARK | | 1 | 3078143550 | |
| 10 | ETIQUETTE 'ELECTROCUTION | « ELECTROCUTION » LABEL | | 1 | 3078143490 | |
| 11 | ET. "HUILE HYDRAULIQUE" | | | 1 | 3078143520 | |
| 11 | HUILE BIODEGRADABLE | BIODEGRADABLE OIL | CEE | 0 | 3078148890 | |
| 12 | SENS TRANSLATION | « DIRECTION OF TRAVEL » LABEL | | 1 | 3078145070 | |
| 13 | NIVEAU HUILE HDRAULIQUE | | | 1 | 3078143590 | |
| 14 | ECRASEMENT MAIN | « HAND CRUSHING » LABEL | | 2 | 3078143620 | |
| 17 | NE PAS MONTER SUR CAPOT | | | 1 | 3078143640 | |
| 19 | ETIQUETTE 'MASSE SOUDURE | « WELDING EARTH » LABEL | | 1 | 3078143600 | |
| 20 | ET. "LA PRISE DOIT ÊTRE | | ETIQUETTE/LABEL | 1 | 3078143540 | |
| 21 | ET. MANUEL D'UTILISATION | | | 1 | 3078143680 | |
| 23 | ETIQUETTE 'PUPITRE BAS' | « BOTTOM PANEL » LABEL | | 1 | 307P217920 | |
| 24 | ETIQ. COFFRET NACELLE | | | 1 | 307P217950 | |
| 30 | ACTIVATION GARANTIE | WARRANTY ACTIVATION LABEL | | 1 | 2420505950 | |
| 31 | NE PAS INTERCHANGER | « DO NOT INTERCHANGE » LABEL | | 1 | 3078145180 | |
| 40 | ADHÉSIF JAUNE ET NOIR | YELLOW AND BLACK ADHESIVE MAR- | | 1 | 2421808660 | |
| 41 | ETIQUETTE 'GRAISSAGE' | « LUBRICATION » LABEL | | 1 | 3078143570 | |
| 42 | ENLEVER BROCHE | « ... REMOVE PIN » LABEL | | 1 | 3078143530 | |
| 44 | ECRASEMENT CORPS | « BODY CRUSHING » LABEL | | 2 | 3078143630 | |
| 48 | FLÈCHE VERTE | GREEN ARROW | | 1 | 3078137440 | |
| 49 | FLÈCHE ROUGE | RED ARROW | | 1 | 3078137430 | |
| 50 | GRAPHISME | LOGO | ' HAULOTTE ' | 3 | 307P217080 | |
| 51 | PUIS. ACOUSTIQ. | ACOUSTIC POWER | 107 DB | 1 | 307P202240 | |

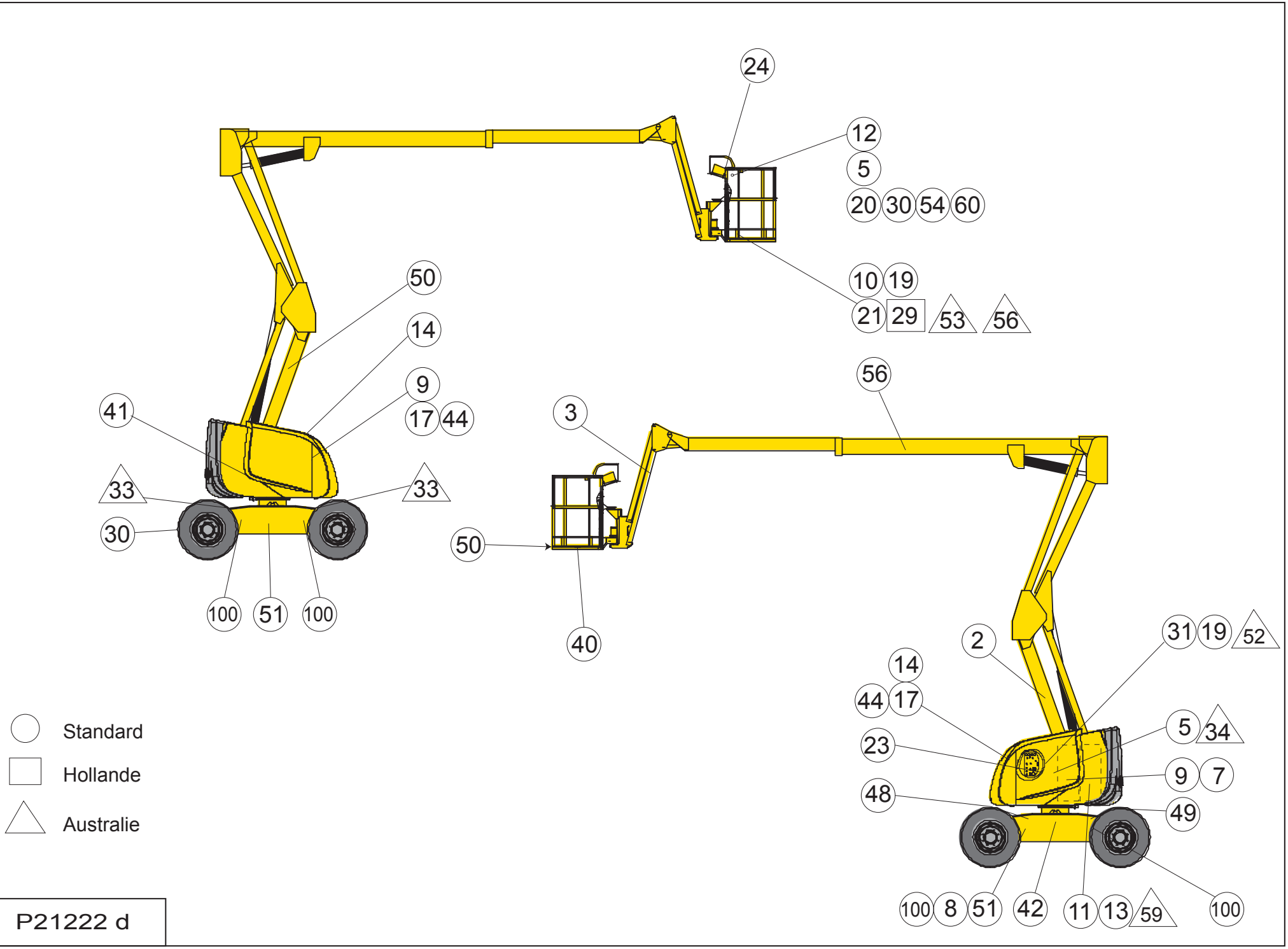
24
12
5
20 30 54 60
10 19
21 29 53 56
50
14
9
17 44
41
33
33
30
100 51 100
56
3
50
40
2
31 19 52
14
44 17
5 34
23
9 7
48
49
100 8 51 42 11 13 59 100
Standard
Hollande
Australie

P21222 d

# ▲ COMMUN SAUF USA / CANADA
# COMMON EXCEPT USA / CANADA



| Rep. | Désignation | Designation | Specification | Qty | Code | Up to / jusqu'à |
|---|---|---|---|---|---|---|
| 55 | DÉPANNAGE MANUEL | MANUAL EMERGENCY OPERATION | | 1 | 307P200700 | |
| 100 | CHARGE SUR UNE ROUE | LOAD ON ONE WHEEL | | 4 | 3078152380 | |
| | RIVET AVEUGLE TÊTE BOMBÉ | | TAPD 48 BS | 4 | 2421803570 | |
| 60 | BARRE COULISSANTE | SLIDING BAR | EUROPE AUSTR | 1 | 3078153510 | |
| 54 | HARNAIS | HARNESS | | 1 | 307P216290 | |
| | CATALOGUE PR | SPARE PARTS CATALOGUE | | 1 | 2420327510 | |
| 56 | GRAPHISME | LOGO | ' HAULOTTE ' | 3 | 307P217770 | |

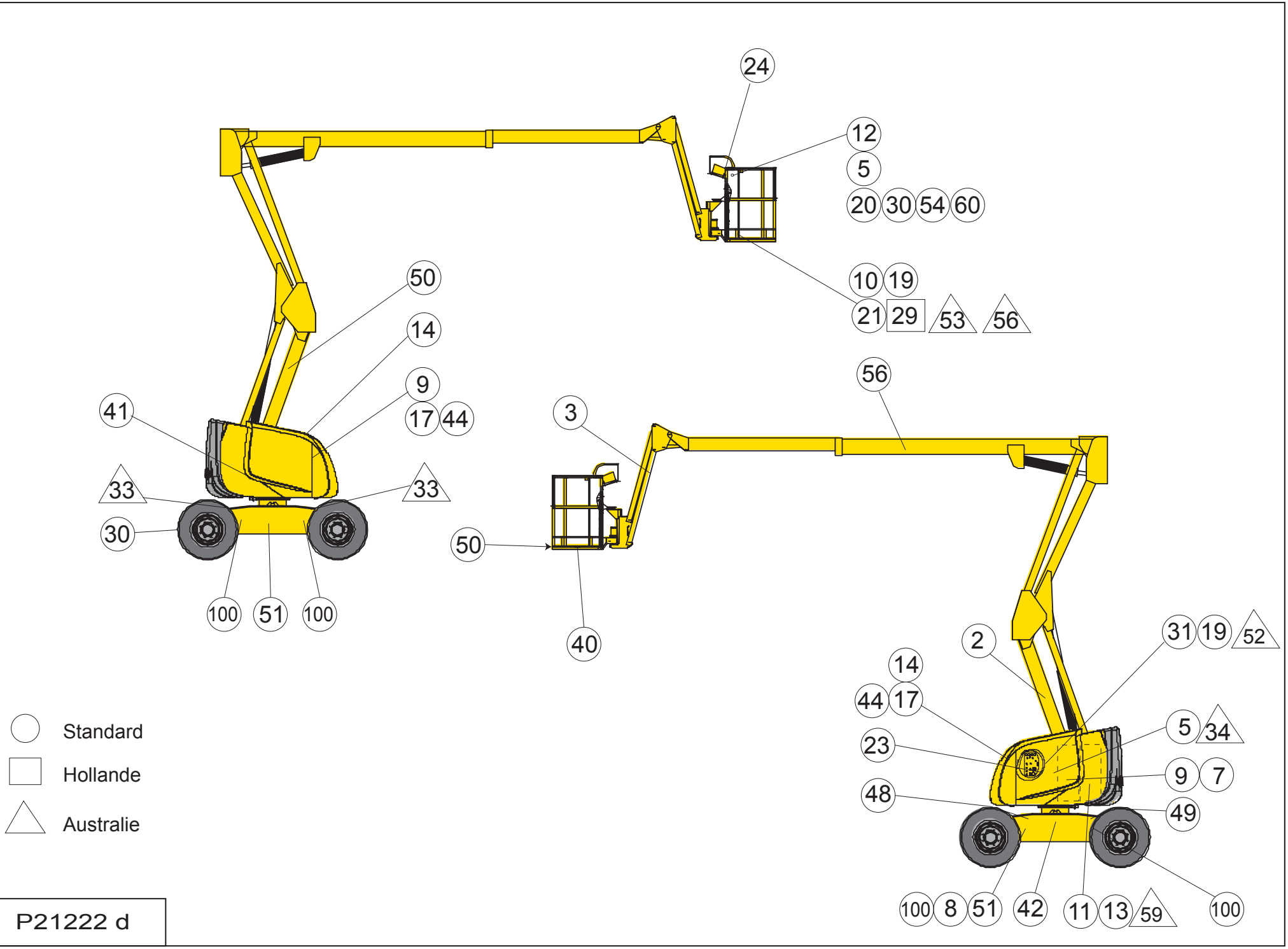
24
12
5
20 30 54 60
10 19
21 29 53 56
50
14
9
17 44
41
33
33
30
100 51 100
56
3
50
40
2
31 19 52
14
44 17
5 34
23
9 7
48
49
100 8 51 42 11 13 59 100
Standard
Hollande
Australie

P21222 d

# ▲ FRANCE
# FRANCE LABELS



| Rep. | Désignation | Designation | Specification | Qty | Code | Up to / jusqu'à |
|---|---|---|---|---|---|---|
| 7 | CONSIGNES UTILISATION | « OPERATING INSTRUCTIONS » | | 1 | 3078143420 | |
| 8 | PLAQUE CONSTRUCTEUR | MANUFACTURER'S PLATE | FRANCE | 1 | 307P218070 | |
| | MANUEL CE | OPERATOR'S MANUAL | HA16SPX FR | 1 | 2420322900 | |

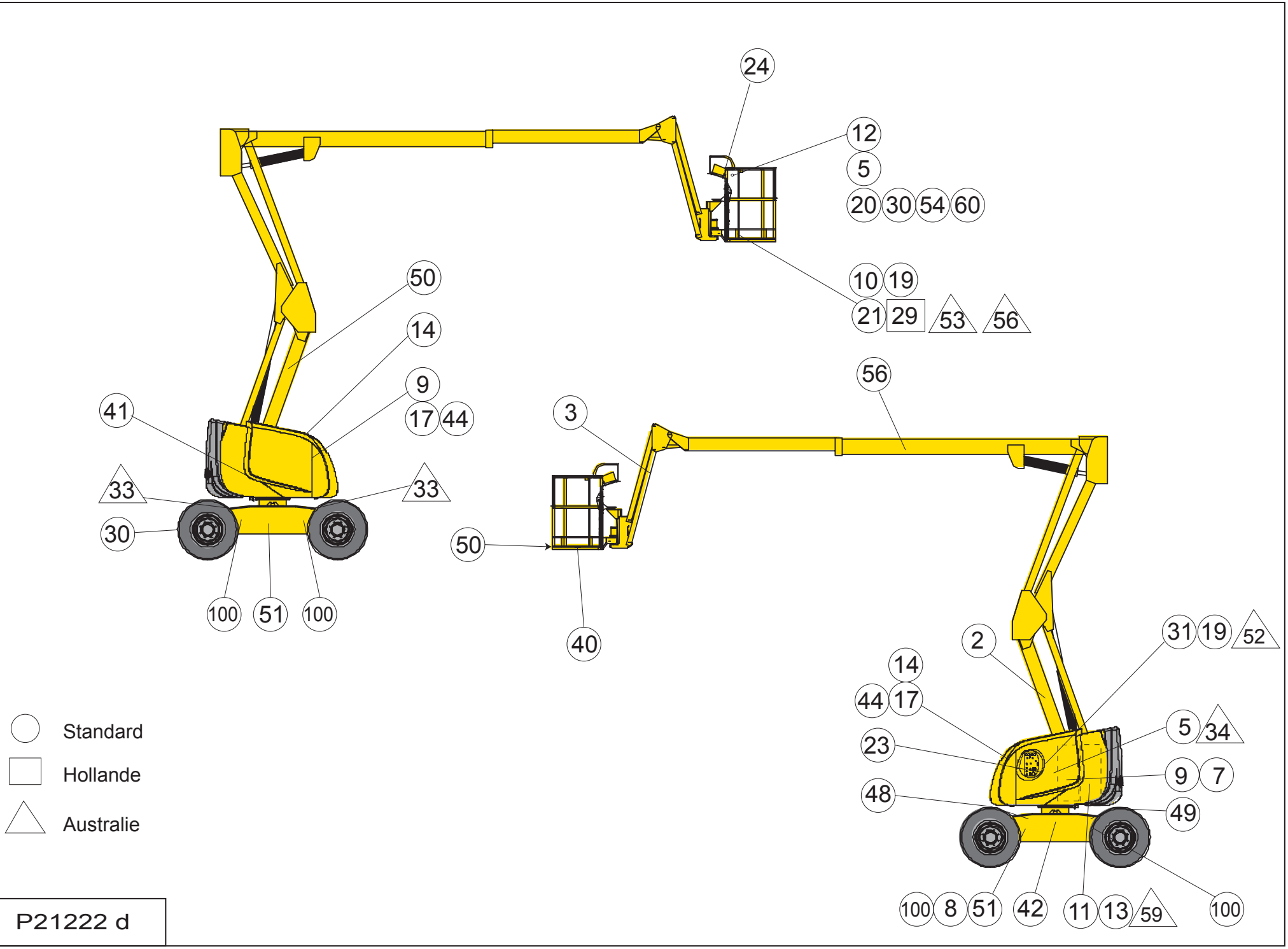
24
12
5
20 30 54 60
10 19
21 29 53 56
50
14
9
17 44
41
33
33
30
100 51 100
56
3
50
40
2
31 19 52
14
44 17
5 34
23
9 7
48
49
100 8 51 42 11 13 59 100
Standard
Hollande
Australie

P21222 d

# ▲ GRANDE BRETAGNE
# GB LABELS



| Rep. | Désignation | Designation | Specification | Qty | Code | Up to / jusqu'à |
|---|---|---|---|---|---|---|
| 7 | CONSIGNES UTILISATION | « OPERATING INSTRUCTIONS » | | 1 | 3078143450 | |
| 8 | ETIQUETTE " PLAQUE CONST | | ANGLETERRE | 1 | 307P218080 | |
| | ETIQUETTE | LABELS | PRISE 110V | 1 | 7814-758 | |
| | MANUEL CE | OPERATOR'S MANUAL | HA16SPX ANG | 1 | 2420323070 | |
| | | | | | | |
| | | | | | | |
| | | | | | | |
| | | | | | | |
| | | | | | | |
| | | | | | | |
| | | | | | | |
| | | | | | | |
| | | | | | | |
| | | | | | | |
| | | | | | | |
| | | | | | | |
| | | | | | | |
| | | | | | | |
| | | | | | | |
| | | | | | | |
| | | | | | | |
| | | | | | | |
| | | | | | | |
| | | | | | | |
| | | | | | | |
| | | | | | | |

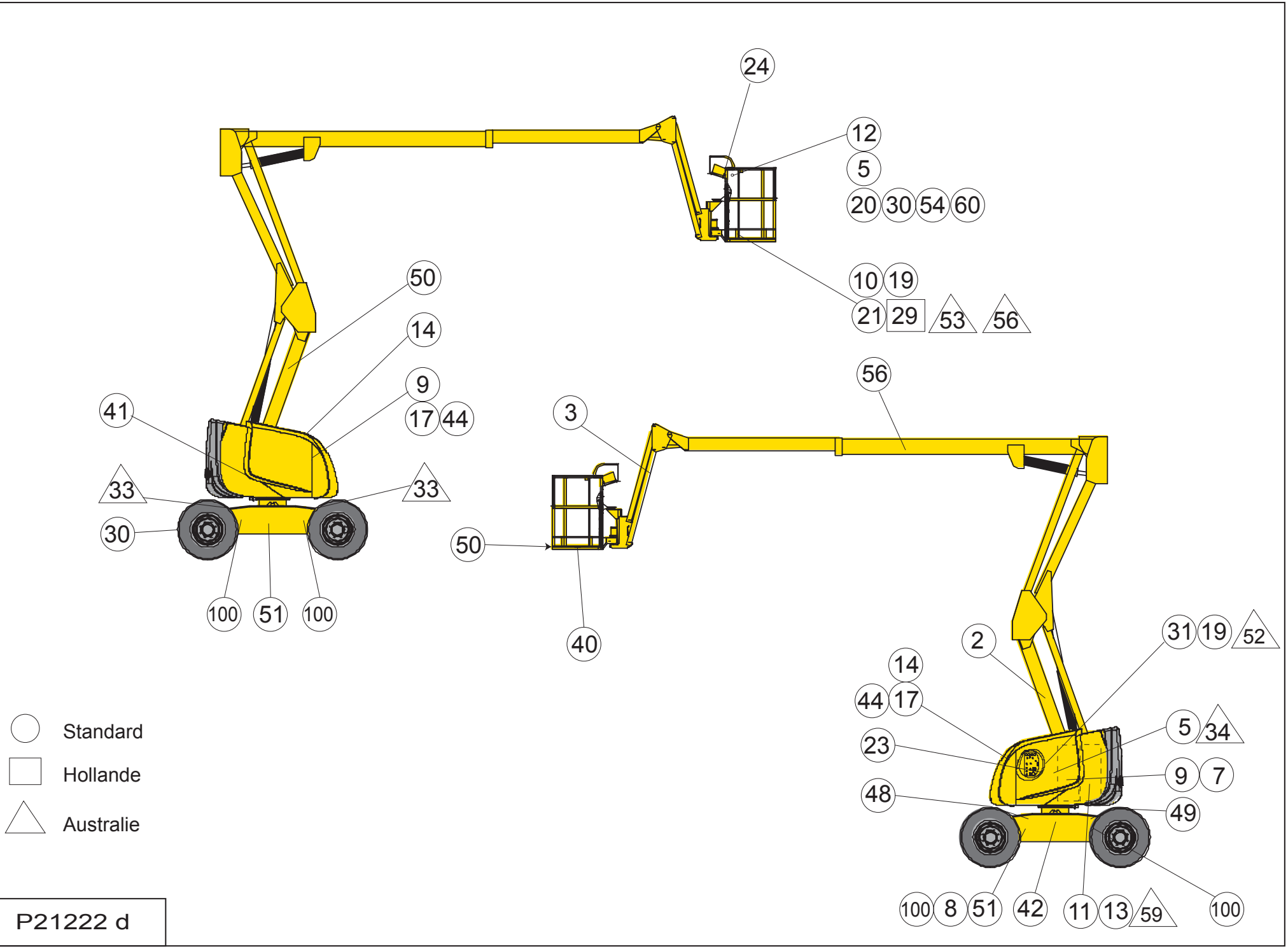
24
12
5
20 30 54 60
10 19
21 29 53 56
50
14
9
17 44
41
33
33
30
100 51 100
56
3
50
40
2
31 19 52
14
44 17
5 34
23
9 7
48
49
100 8 51 42 11 13 59 100
Standard
Hollande
Australie

P21222 d

# ▲ ALLEMAGNE
# RFA LABELS



| Rep. | Désignation | Designation | Specification | Qty | Code | Up to / jusqu'à |
|---|---|---|---|---|---|---|
| 7 | CONSIGNES UTILISATION | « OPERATING INSTRUCTIONS » | | 1 | 3078143440 | |
| 8 | PLAQUE CONSTRUCTEUR | MANUFACTURER'S PLATE | ALLEMAGNE | 1 | 307P218090 | |
| | MANUEL CE | OPERATOR'S MANUAL | HA16SPX ALL | 1 | 2420323080 | |

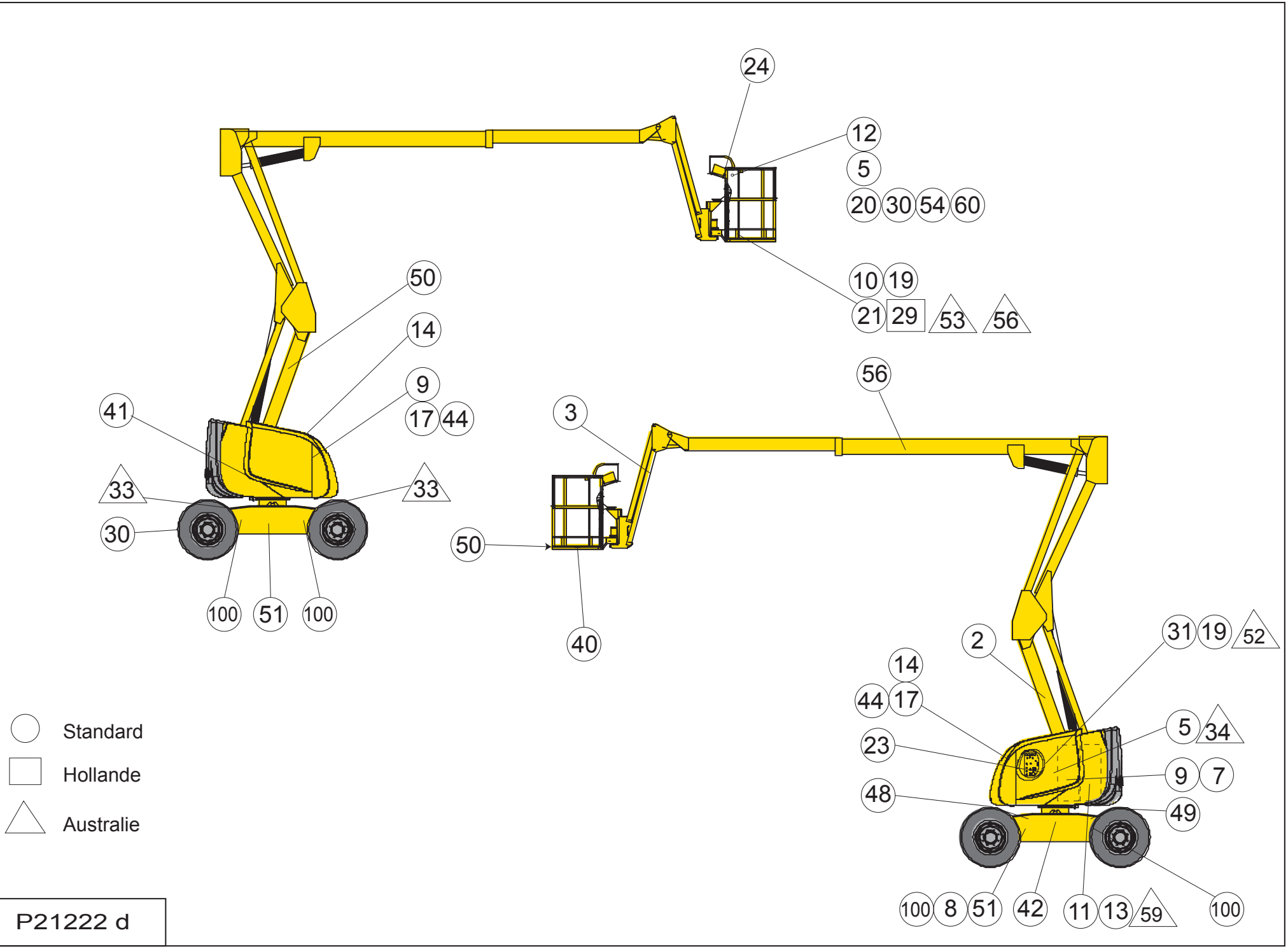
24
12
5
20 30 54 60
10 19
21 29 53 56
50
14
9
17 44
41
33
33
30
100 51 100
56
3
50
40
2
31 19 52
14
44 17
5 34
23
9 7
48
49
100 8 51 42 11 13 59 100
Standard
Hollande
Australie

P21222 d

# ▲ ESPAGNE
# SPAIN LABELS

◀ G5 ▶

| Rep. | Désignation | Designation | Specification | Qty | Code | Up to / jusqu'à |
|---|---|---|---|---|---|---|
| 7 | CONSIGNES UTILISATION | « OPERATING INSTRUCTIONS » | | 1 | 3078143430 | |
| 8 | PLAQUE CONSTRUCTEUR | MANUFACTURER'S PLATE | ESPAGNE | 1 | 307P218110 | |
| | MANUEL CE | OPERATOR'S MANUAL | HA16SPX ESP | 1 | 2420323090 | |

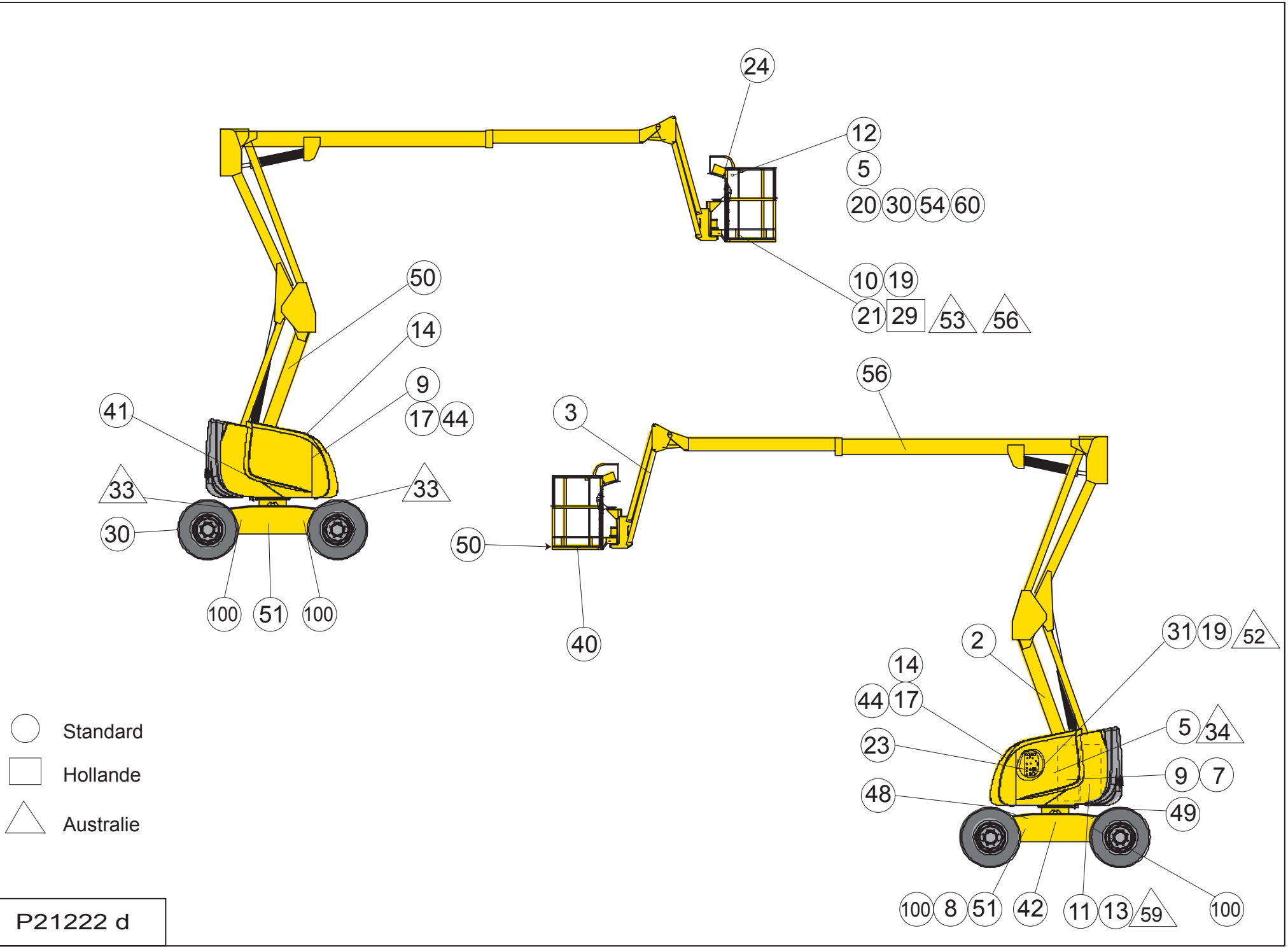
24
12
5
20 30 54 60
10 19
21 29 53 56
50
14
9
17 44
41
33
33
30
100 51 100
56
3
50
40
2
31 19 52
14
44 17
5 34
23
9 7
48
49
100 8 51 42 11 13 59 100
Standard
Hollande
Australie

P21222 d

# ▲ ITALIE
# ITALY LABELS



| Rep. | Désignation | Designation | Specification | Qty | Code | Up to / jusqu'à |
|---|---|---|---|---|---|---|
| 7 | CONSIGNES UTILISATION | « OPERATING INSTRUCTIONS » | | 1 | 3078143460 | |
| 8 | PLAQUE CONSTRUCTEUR | MANUFACTURER'S PLATE | ITALIEN | 1 | 307P218100 | |
| | MANUEL CE | OPERATOR'S MANUAL | HA16SPX ITA | 1 | 2420323100 | |

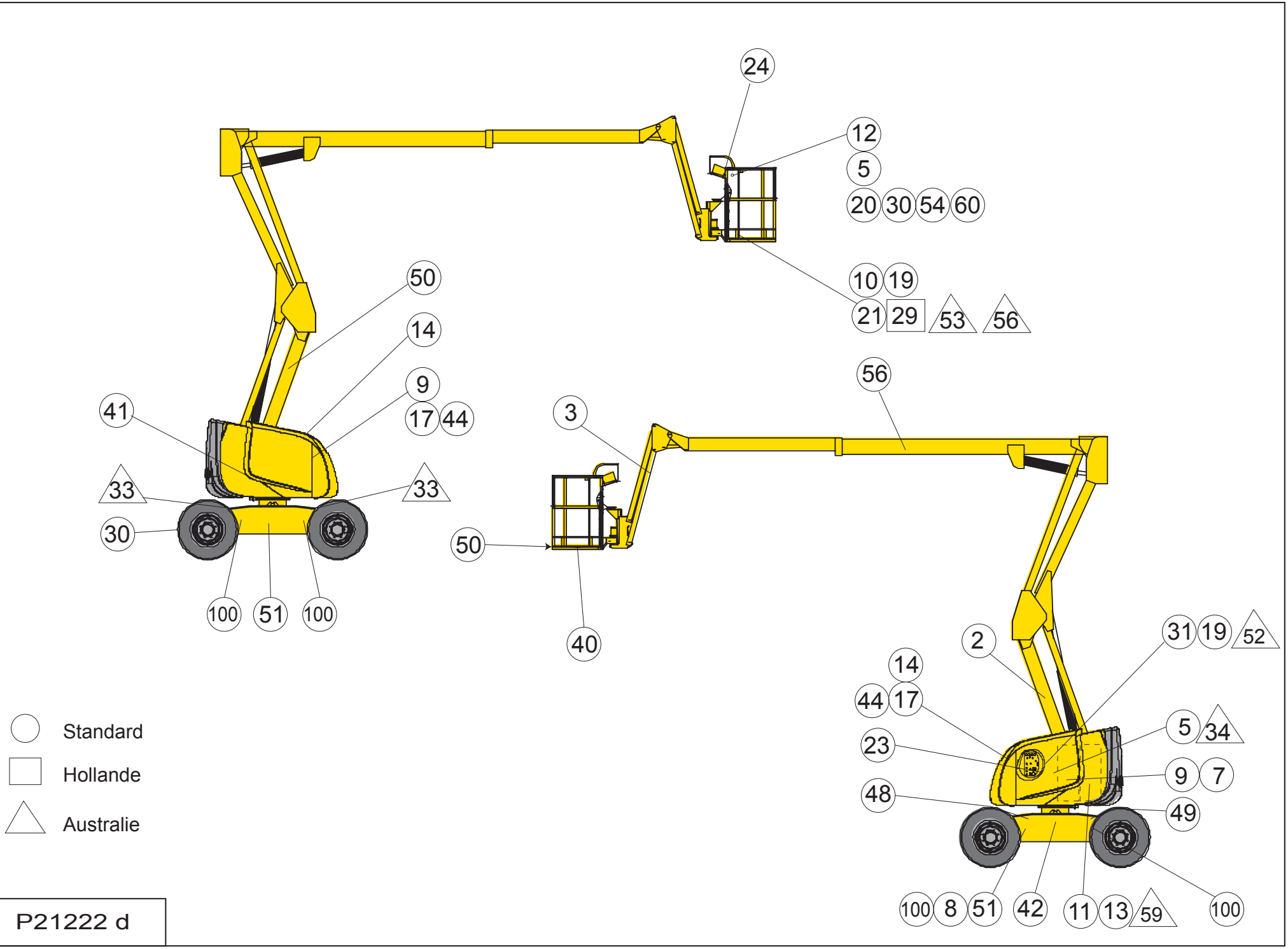
24
12
5
20 30 54 60
10 19
21 29 53 56
50
14
9
17 44
41
33
33
30
100 51 100
56
3
50
40
2
31 19 52
14
44 17
5 34
23
9 7
48
49
100 8 51 42 11 13 59 100
Standard
Hollande
Australie

P21222 d

# ▲ HOLLANDE
# HOLLAND LABELS



| Rep. | Désignation | Designation | Specification | Qty | Code | Up to / jusqu'à |
|---|---|---|---|---|---|---|
| 7 | CONSIGNES UTILISATION | « OPERATING INSTRUCTIONS » | HOLLANDE | 1 | 3078143470 | |
| 8 | PLAQUE CONSTRUCTEUR | MANUFACTURER'S PLATE | HOLLANDE | 1 | 307P218120 | |
| 29 | EMPLACEMENT PRISE 240V | 240V SOCKET POSITION | | 1 | 3078145730 | |
| | MANUEL CE | OPERATOR'S MANUAL | HA16SPX HOL | 1 | 2420323110 | |

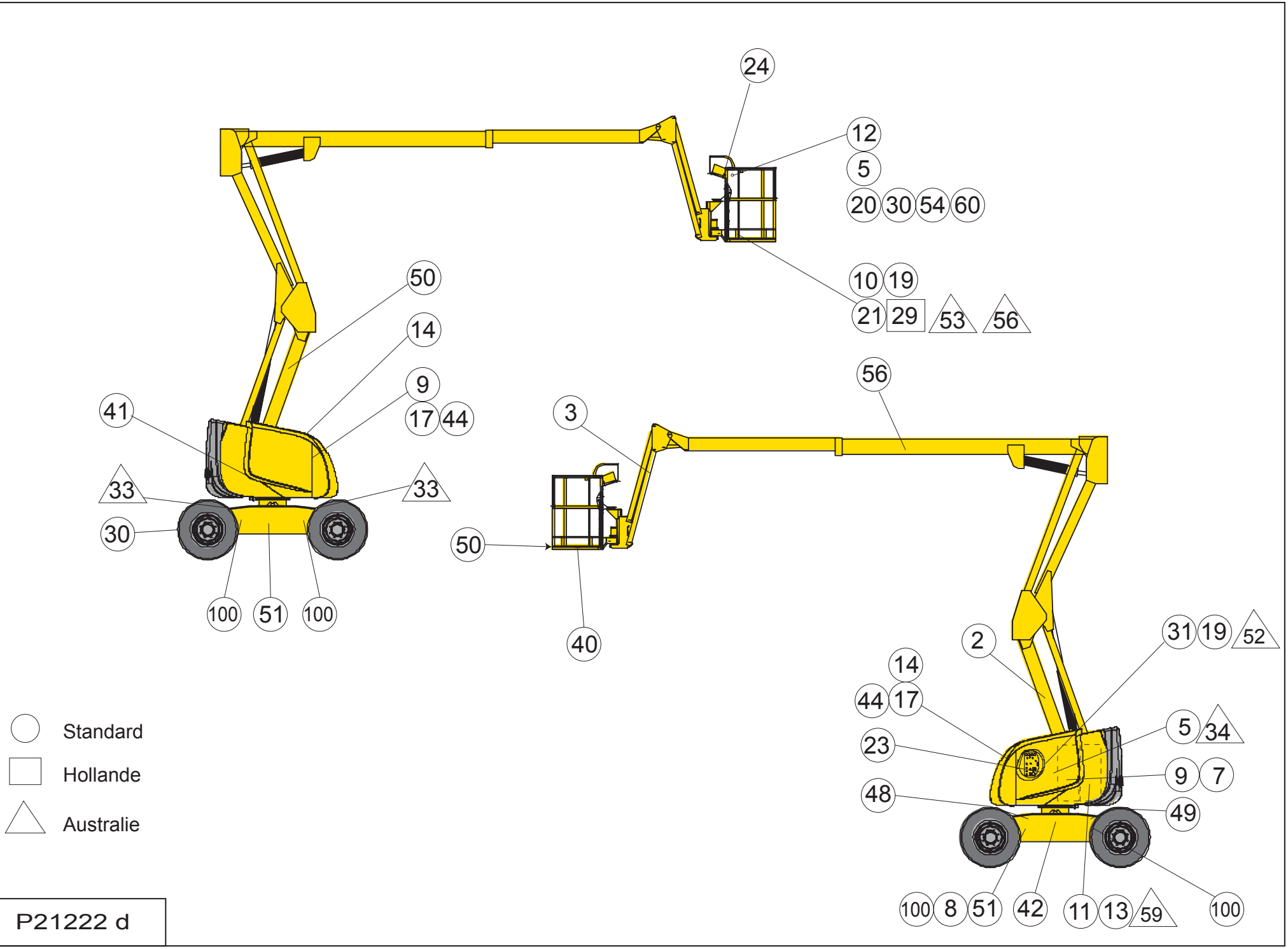
24
12
5
20 30 54 60
10 19
21 29 53 56
50
14
9
17 44
41
33
33
30
100 51 100
56
3
50
40
2
31 19 52
14
44 17
5 34
23
9 7
48
49
100 8 51 42 11 13 59 100
Standard
Hollande
Australie

P21222 d

# ▲ AUSTRALIE
# AUSTRALIA



| Rep. | Désignation | Designation | Specification | Qty | Code | Up to / jusqu'à |
|---|---|---|---|---|---|---|
| 7 | CONSIGNES UTILISATION | « OPERATING INSTRUCTIONS » | AUSTRALIE | 1 | 3078144560 | |
| 8 | ETIQUETTE " PLAQUE CONST | | ANGLETERRE | 1 | 307P218080 | |
| 10 | ETIQUETTE 'ELECTROCUTION | « ELECTROCUTION » LABEL | AUSTRALIE | 1 | 3078144430 | |
| 12 | SENS TRANSLATION | « DIRECTION OF TRAVEL » LABEL | AUSTRALIE | 1 | 3078145230 | |
| 29 | PRISE 220V | « 220 V SOCKET » LABEL | | 1 | 3078144570 | |
| 33 | CAPACITE DE CHARGE DE CH | | AUSTRALIE | 4 | 3078144490 | |
| 34 | ETIQ. REMPLISSAGE | | FUEL PISTOLET UNIQ | 1 | 3078144510 | |
| 52 | ETIQUETTE 'URGENCE' | « EMERGENCY » LABEL | AUSTRALIE | 1 | 3078144530 | |
| 53 | ETIQ. PORT DE HARNAIS | | AUSTRALIE | 2 | 3078144520 | |
| 56 | ETIQ. CONFORME EN280 | | AUSTRALIE | 1 | 3078144540 | |
| 59 | FLUIDE SOUS PRESSION | PRESSURISED LIQUID LABEL | AUSTRALIE | 1 | 3078145200 | |
| | MANUEL CE | OPERATOR'S MANUAL | HA16SPX AUS | 1 | 2420323120 | |
| | | | | | | |
| | | | | | | |
| | | | | | | |
| | | | | | | |
| | | | | | | |
| | | | | | | |
| | | | | | | |
| | | | | | | |
| | | | | | | |
| | | | | | | |
| | | | | | | |
| | | | | | | |
| | | | | | | |
| | | | | | | |

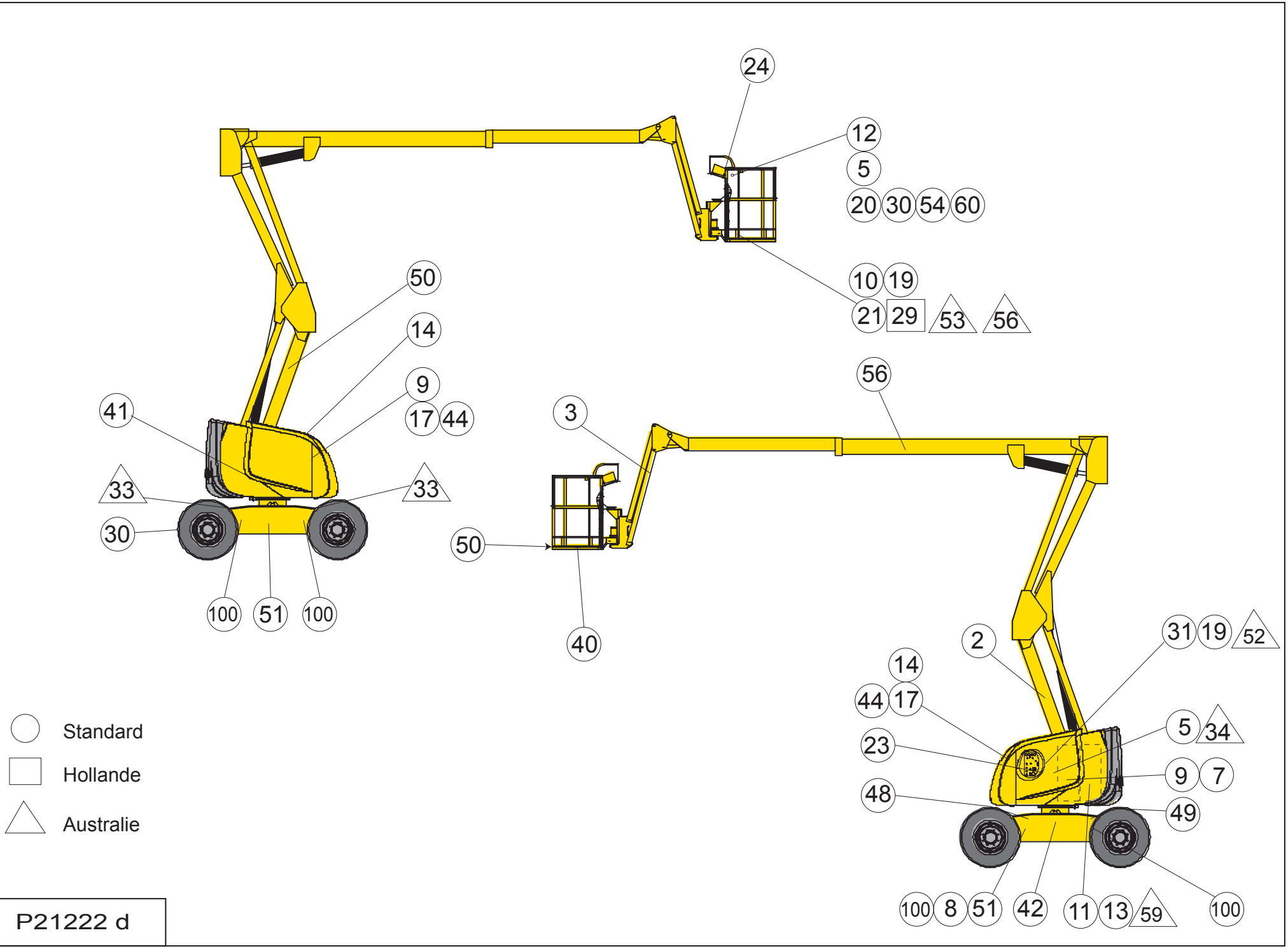
24
12
5
20 30 54 60
10 19
21 29 53 56
50
14
9
17 44
41
33
33
30
100 51 100
56
3
50
40
2
31 19 52
14
44 17
5 34
23
9 7
48
49
100 8 51 42 11 13 59 100
Standard
Hollande
Australie

P21222 d

# ▲ DANEMARK
# DENMARK LABELS



| Rep. | Désignation | Designation | Specification | Qty | Code | Up to / jusqu'à |
|---|---|---|---|---|---|---|
| 7 | CONSIGNES UTILISATION | « OPERATING INSTRUCTIONS » | DANEMARK | 1 | 3078144940 | |
| 8 | PLAQUE CONSTRUCTEUR | MANUFACTURER'S PLATE | DANEMARK | 1 | 307P218130 | |
| | MANUEL CE | OPERATOR'S MANUAL | HA16SPX DAN | 1 | 2420323130 | |

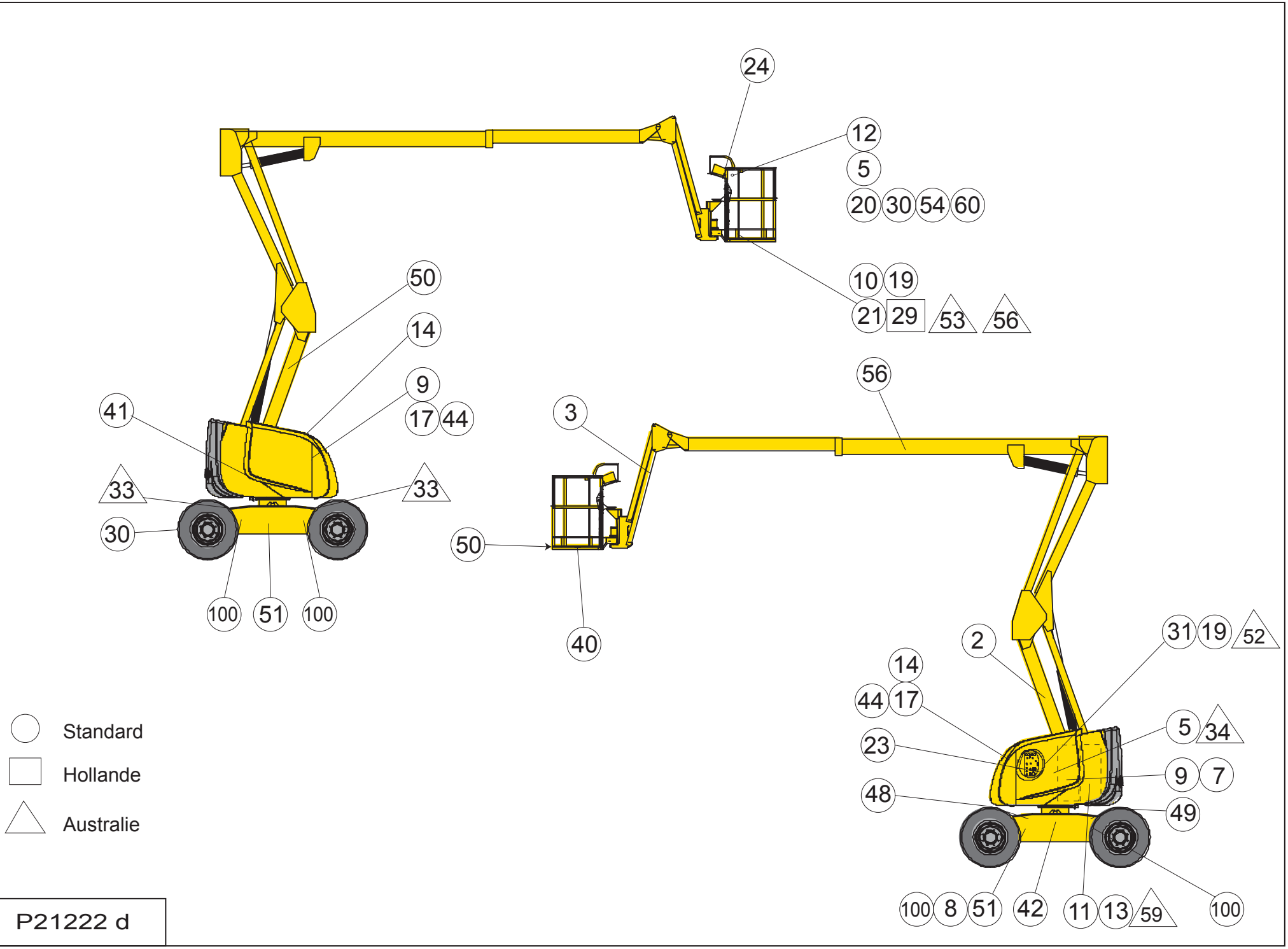
24
12
5
20 30 54 60
10 19
21 29 53 56
50
14
9
17 44
41
33
33
30
100 51 100
56
3
50
40
2
31 19 52
14
44 17
5 34
23
9 7
48
49
100 8 51 42 11 13 59 100
Standard
Hollande
Australie

P21222 d

# ▲ FINLANDE
# FINLAND LABELS



| Rep. | Désignation | Designation | Specification | Qty | Code | Up to / jusqu'à |
|---|---|---|---|---|---|---|
| 7 | CONSIGNES UTILISATION | « OPERATING INSTRUCTIONS » | FINLANDE | 1 | 3078145540 | |
| 8 | PLAQUE CONSTRUCTEUR | MANUFACTURER'S PLATE | FINLANDE | 1 | 307P218160 | |
| | MANUEL CE | OPERATOR'S MANUAL | HA16SPX FIN | 1 | 2420323140 | |

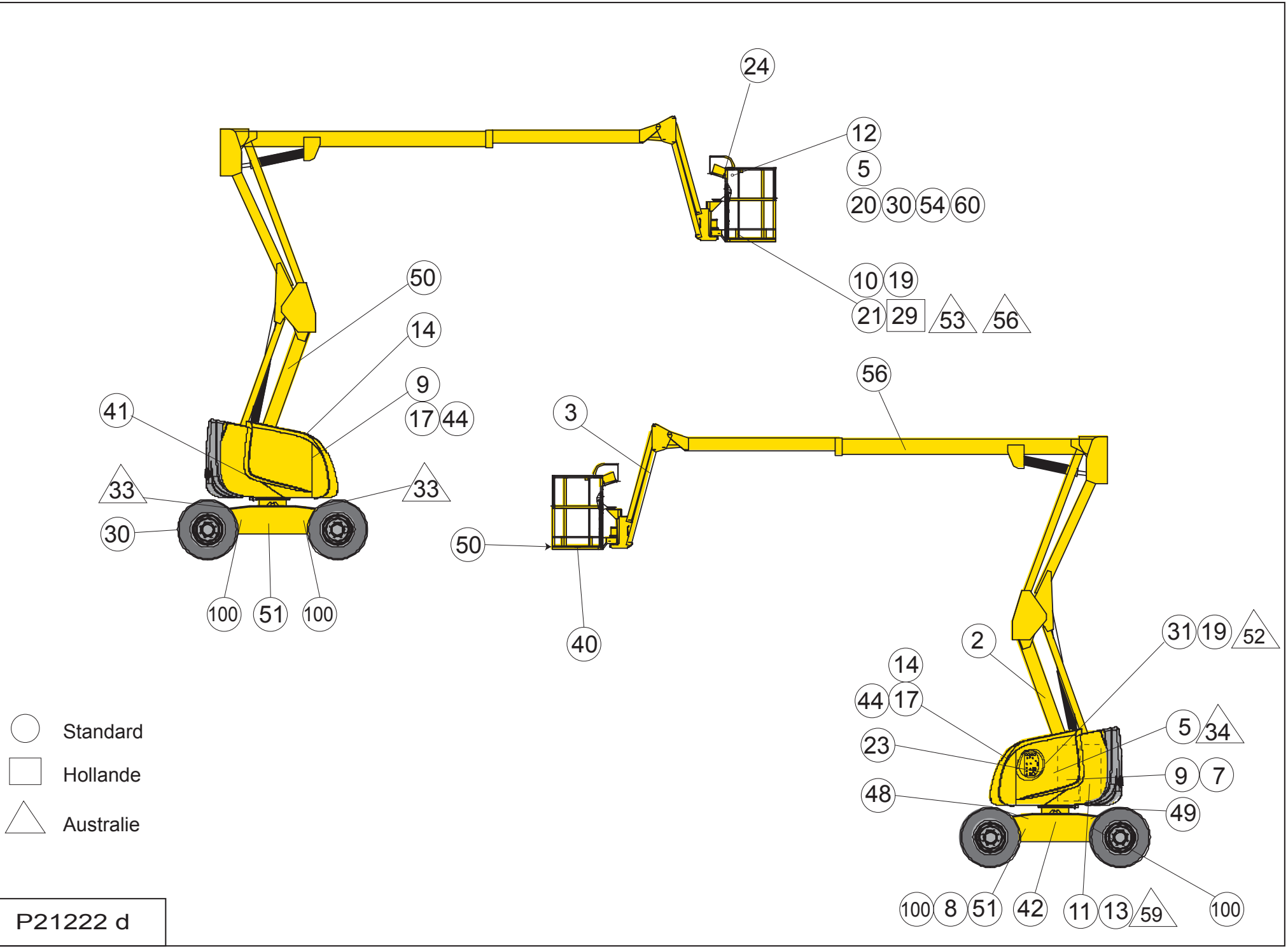
24
12
5
20 30 54 60
10 19
21 29 53 56
50
14
9
17 44
41
33
33
30
100 51 100
56
3
50
40
2
31 19 52
14
44 17
5 34
23
9 7
48
49
100 8 51 42 11 13 59 100
Standard
Hollande
Australie

P21222 d

# ▲ PORTUGAL
# PORTUGAL LABELS



| Rep. | Désignation | Designation | Specification | Qty | Code | Up to / jusqu'à |
|---|---|---|---|---|---|---|
| 7 | CONSIGNES UTILISATION | « OPERATING INSTRUCTIONS » | PORTUGAL | 1 | 3078145830 | |
| 8 | PLAQUE CONSTRUCTEUR | MANUFACTURER'S PLATE | PORTUGAL | 1 | 307P218140 | |
| | MANUEL CE | OPERATOR'S MANUAL | HA16SPX POR | 1 | 2420323150 | |

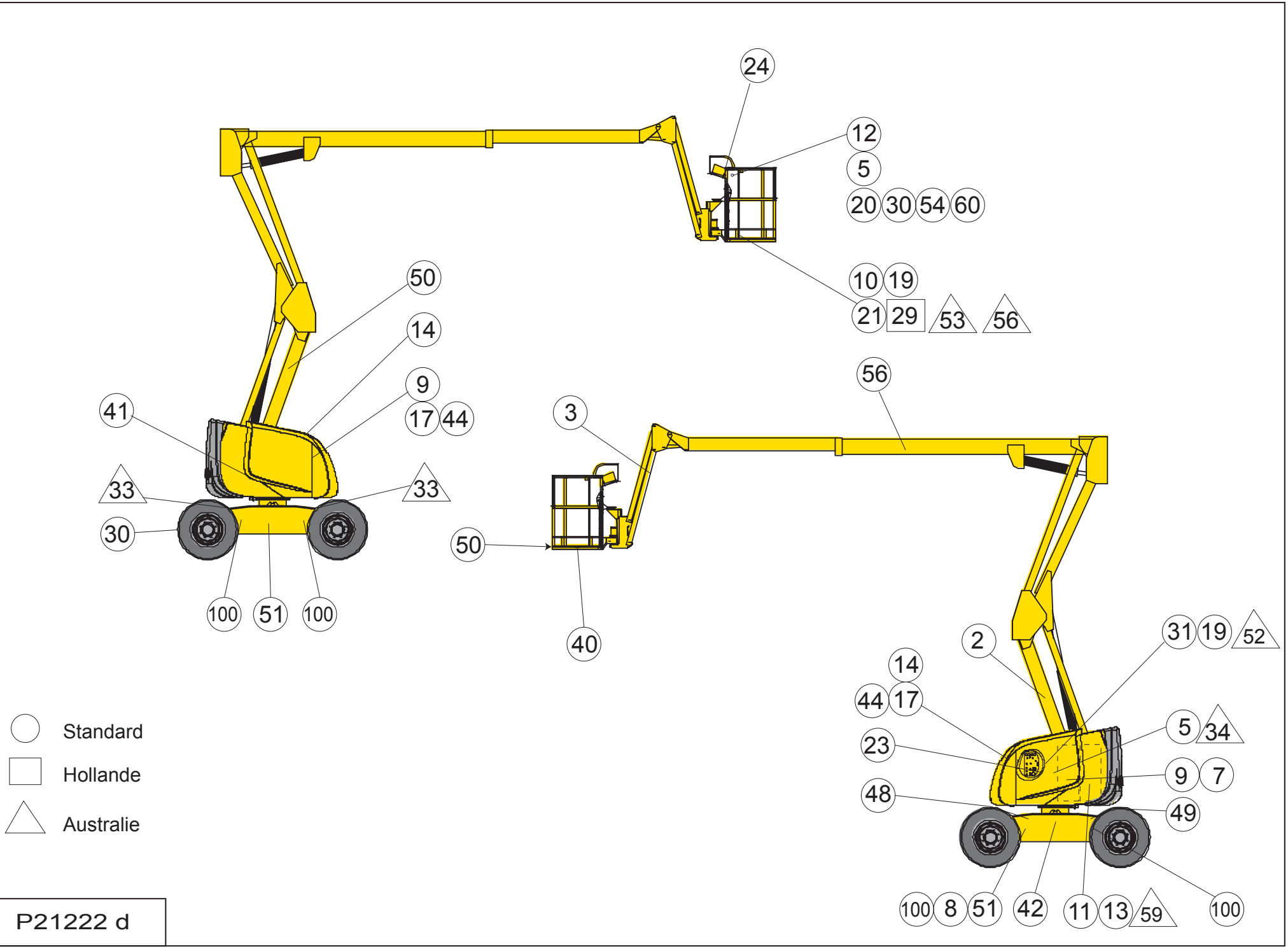
24
12
5
20 30 54 60
10 19
21 29 53 56
50
14
9
17 44
41
33
33
30
100 51 100
56
3
50
40
2
31 19 52
14
44 17
5 34
23
9 7
48
49
100 8 51 42 11 13 59 100
Standard
Hollande
Australie

P21222 d

# ▲ SUEDE



| Rep. | Désignation | Designation | Specification | Qty | Code | Up to / jusqu'à |
|---|---|---|---|---|---|---|
| 7 | CONSIGNES UTILISATION | « OPERATING INSTRUCTIONS » | SUEDE | 1 | 3078145940 | |
| 8 | PLAQUE CONSTRUCTEUR | MANUFACTURER'S PLATE | SUEDE | 1 | 307P218150 | |
| | MANUEL CE | OPERATOR'S MANUAL | HA16SPX SUE | 1 | 2420323160 | |

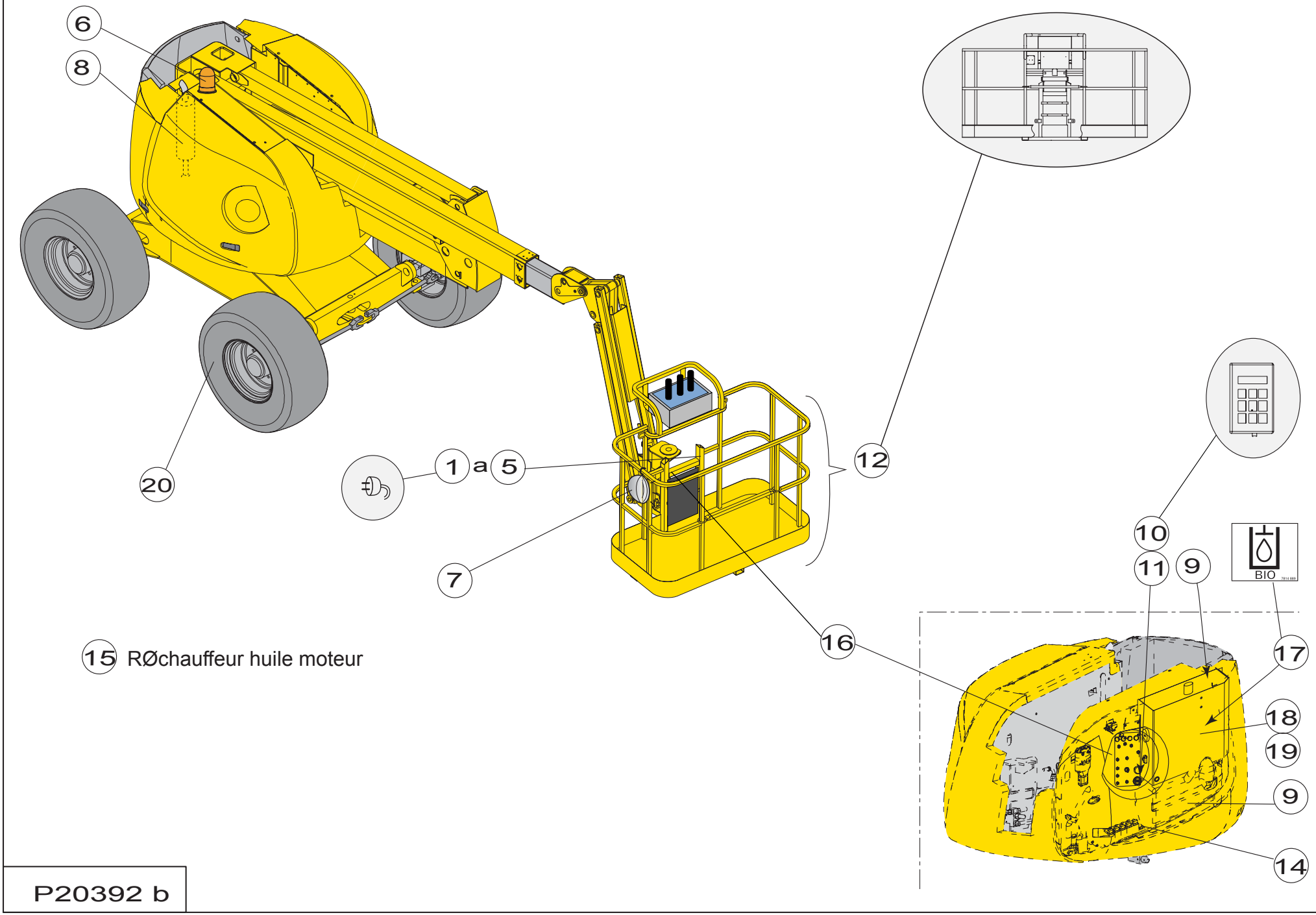


15 RØchauffeur huile moteur

P20392 b

# ▲ OPTIONS
# OPTION

◀ H ▶

| Rep. | Désignation | Designation | Specification | Up to / jusqu'à |
|---|---|---|---|---|
| 1 | ALIMENTATION 220V | SUPPLY | FRANÇAIS | |
| 2 | ALIMENTATION 220V | SUPPLY | ANGLAIS | |
| 3 | ALIMENTATION 220V | SUPPLY | ALLEMAND | |
| 4 | ALIMENTATION 220V | SUPPLY | USA | |
| 5 | ALIMENTATION 220V | SUPPLY | EUR | |
| 6 | GYROPHARE | BEACON | | |
| 7 | PHARE DE TRAVAIL | WORK HEADLIGHT | | |
| 8 | POT CATALYTIQUE | CATALYTIC CONVERTER | | |
| 9 | VIDANGE+REMPLISSAGE | EMPTYING AND FILLING | | |
| 10 | MODULE DÉMARRAGE CODÉ | CODED IGNITION MODULE | | |
| 11 | MODULE DE  DÉMARRAGE COD | CODED IGNITION MODULE | EXTRAIT DE | |
| 12 | PANIER LARGE | WIDE BASKET | 2300X800 | |
| 14 | DISJONCTEUR DIFFÉRENTIEL | DIFFERENTIAL CIRCUIT BREAKER | | |
| 15 | RÉCHAUFFEUR HUILE MOTEUR | MOTOR OIL HEATER | | |
| 16 | SECURITÉ PANIER 'LOXAM' | LOXAM BASKET SAFETY SYSTEM | | |
| 17 | HUILE BIOLOGIQUE | ORGANIC OIL | | |
| 18 | GASOIL BLANC | WHITE DIESEL | ALLEMAGNE | |
| 19 | HUILE PAYS CHAUDS | OIL FOR HOT COUNTRIES | | |
| 20 | PNEU 'NO MARKING' | NON MARKING TYRE | | |
| | | | | |
| | | | | |
| | | | | |
| | | | | |
| | - | | | |
| | | | | |
| | | | | |

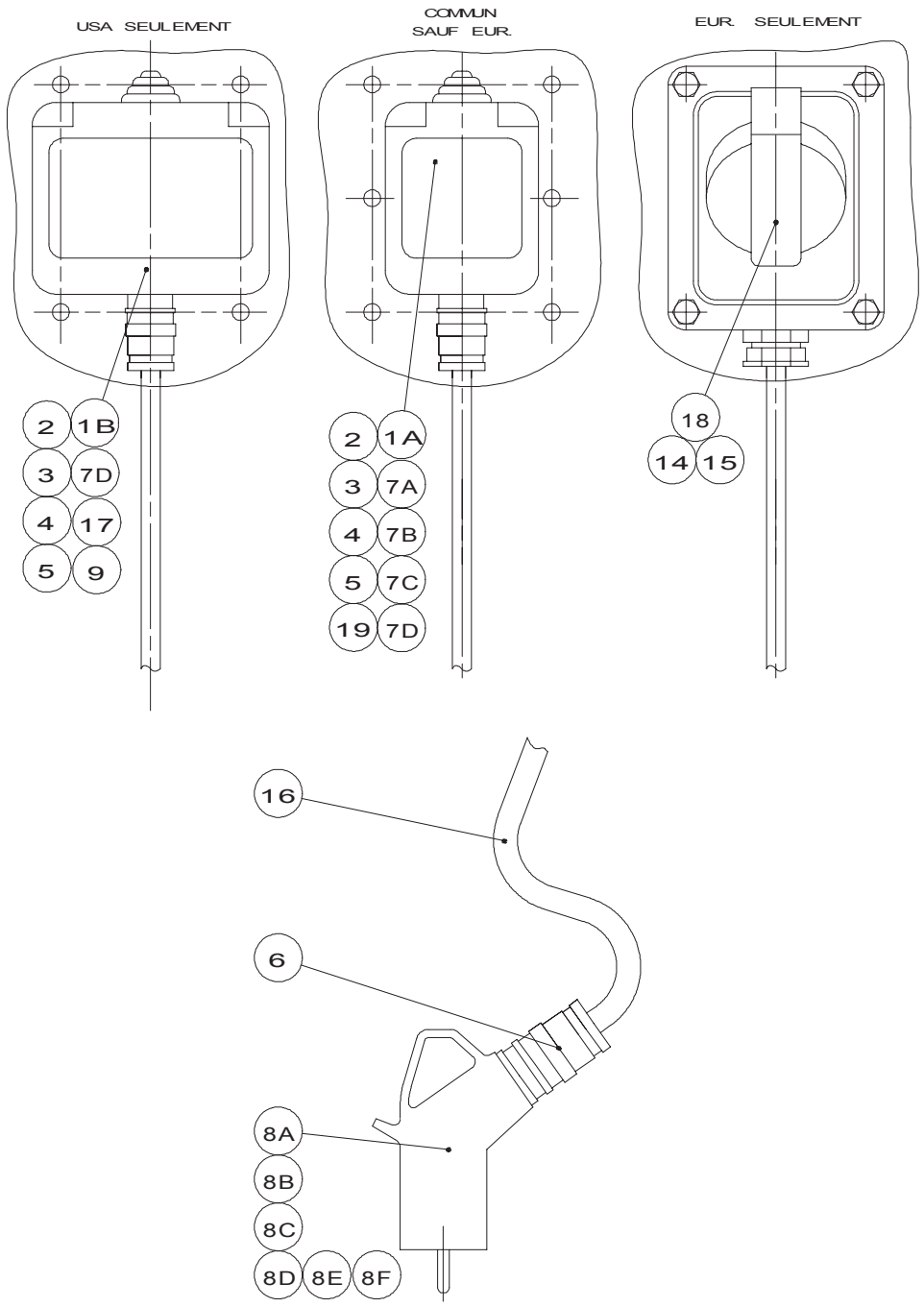
USA SEULEMENT
COMMUN
SAUF EUR.
EUR. SEULEMENT
2
1B
3
7D
4
17
5
9
2
1A
3
7A
4
7B
5
7C
19
7D
18
14
15
16
6
8A
8B
8C
8D
8E
8F

C15233 g

# ▲ ALIMENTATION 220V SUPPLY

◀ H1 ▶

| Rep. | Désignation | Designation | Specification | Qty | Code | Up to / jusqu'à |
|---|---|---|---|---|---|---|
| 1 | BOÎTIER | BOX | | 1 | 2440203650 | |
| 2 | VIS | SCREW | H M4X20-20 CL.8.8 ZB | 2 | 2331231120 | |
| 3 | RONDELLE À DENTS | TOOTH LOCK WASHER | DEC 4 ZB | 2 | 2351301050 | |
| 4 | ECROU | NUT | H M4 CL. 8 ZB | 2 | 2341221030 | |
| 5 | CONTRE-ÉCROU | LOCK NUT | CE 16 IN | 1 | 2420302030 | |
| 6 | PRESSE-ÉTOUPE | PACKING BOX | 13 | 1 | 2421602190 | |
| 7 | PRISE | PLUG SOCKET | 2P+T-10/16A | 1 | 2441605540 | |
| 8 | FICHE 2P+T | | FRANCE/ALLEMAGNE | 1 | 2440603970 | |
| 16 | CÂBLE | CABLE | 3G 2,5MM2 | 21 | 2440311750 | |
| 18 | PRESSE-ÉTOUPE RÉDUCTEUR | REDUCER PACKING BOX | 21/13 | 1 | 2441613050 | |
| 19 | PRESSE-ÉTOUPE RÉDUCTEUR | REDUCER PACKING BOX | 16/13 | 1 | 2441613040 | |
| | | | | | | |
| | | | | | | |
| | | | | | | |
| | | | | | | |
| | | | | | | |
| | | | | | | |
| | | | | | | |
| | | | | | | |
| | | | | | | |
| | | | | | | |
| | | | | | | |
| | | | | | | |
| | | | | | | |
| | | | | | | |
| | | | | | | |

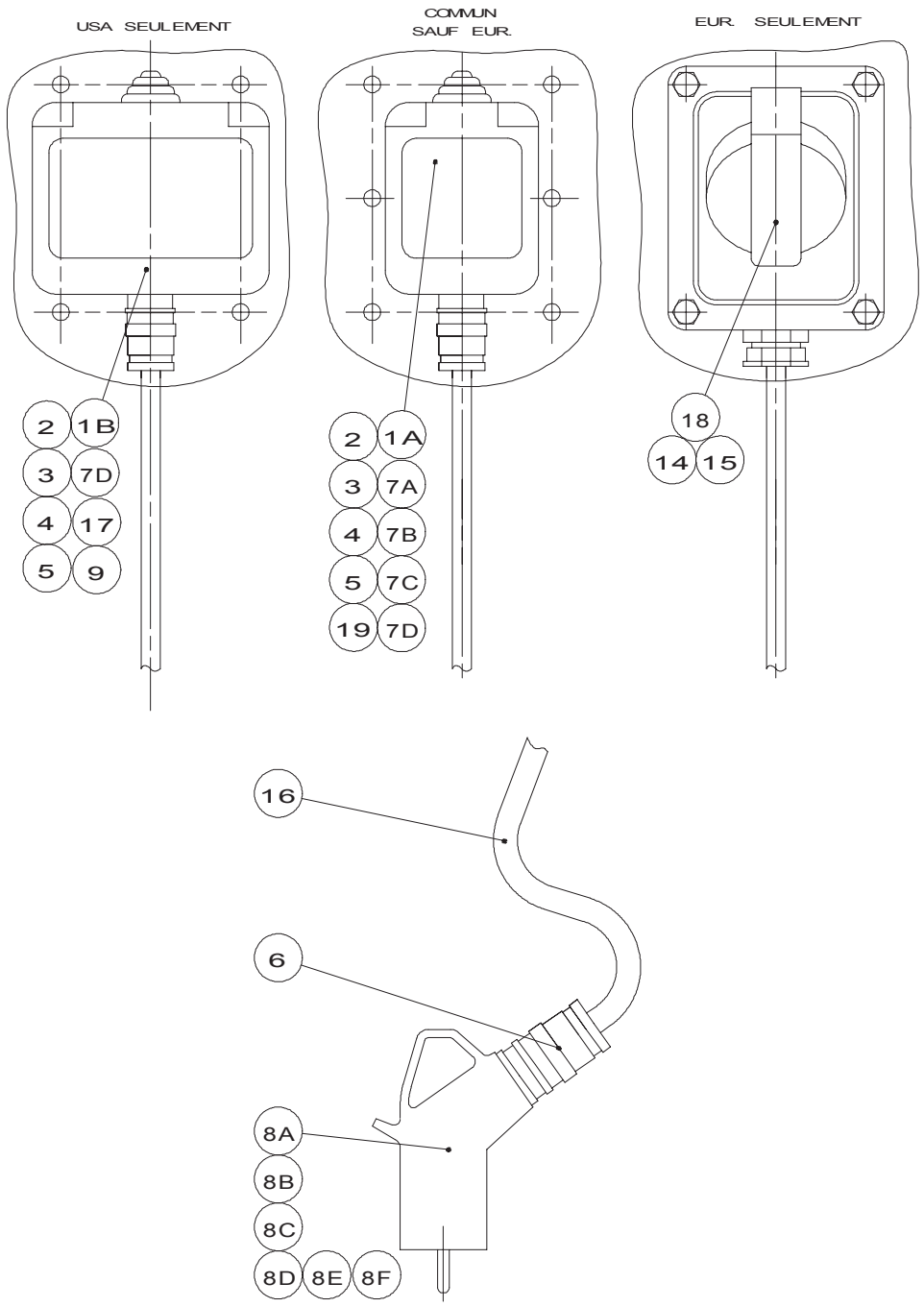
USA SEULEMENT
COMMUN
SAUF EUR.
EUR. SEULEMENT
2
1B
3
7D
4
17
5
9
2
1A
3
7A
4
7B
5
7C
19
7D
18
14
15
16
6
8A
8B
8C
8D
8E
8F

C15233 g

# ▲ ALIMENTATION 220V SUPPLY

◀ H2 ▶

| Rep. | Désignation | Designation | Specification | Qty | Code | Up to / jusqu'à |
|---|---|---|---|---|---|---|
| 1 | BOÎTIER | BOX | | 1 | 2440203650 | |
| 2 | VIS | SCREW | H M4X20-20 CL.8.8 ZB | 2 | 2331231120 | |
| 3 | RONDELLE À DENTS | TOOTH LOCK WASHER | DEC 4 ZB | 2 | 2351301050 | |
| 4 | ECROU | NUT | H M4 CL. 8 ZB | 2 | 2341221030 | |
| 5 | CONTRE-ÉCROU | LOCK NUT | CE 16 IN | 1 | 2420302030 | |
| 6 | PRESSE-ÉTOUPE | PACKING BOX | 13 | 1 | 2421602190 | |
| 7 | PRISE | PLUG SOCKET | 2P+T-13A | 1 | 2441605070 | |
| 8 | FICHE | PLUG | 13A | 2 | 2440603750 | |
| 16 | CÂBLE | CABLE | 3G 2,5MM2 | 1 | 2440311750 | |
| 18 | PRESSE-ÉTOUPE RÉDUCTEUR | REDUCER PACKING BOX | 21/13 | 1 | 2441613050 | |
| 19 | PRESSE-ÉTOUPE RÉDUCTEUR | REDUCER PACKING BOX | 16/13 | 1 | 2441613040 | |

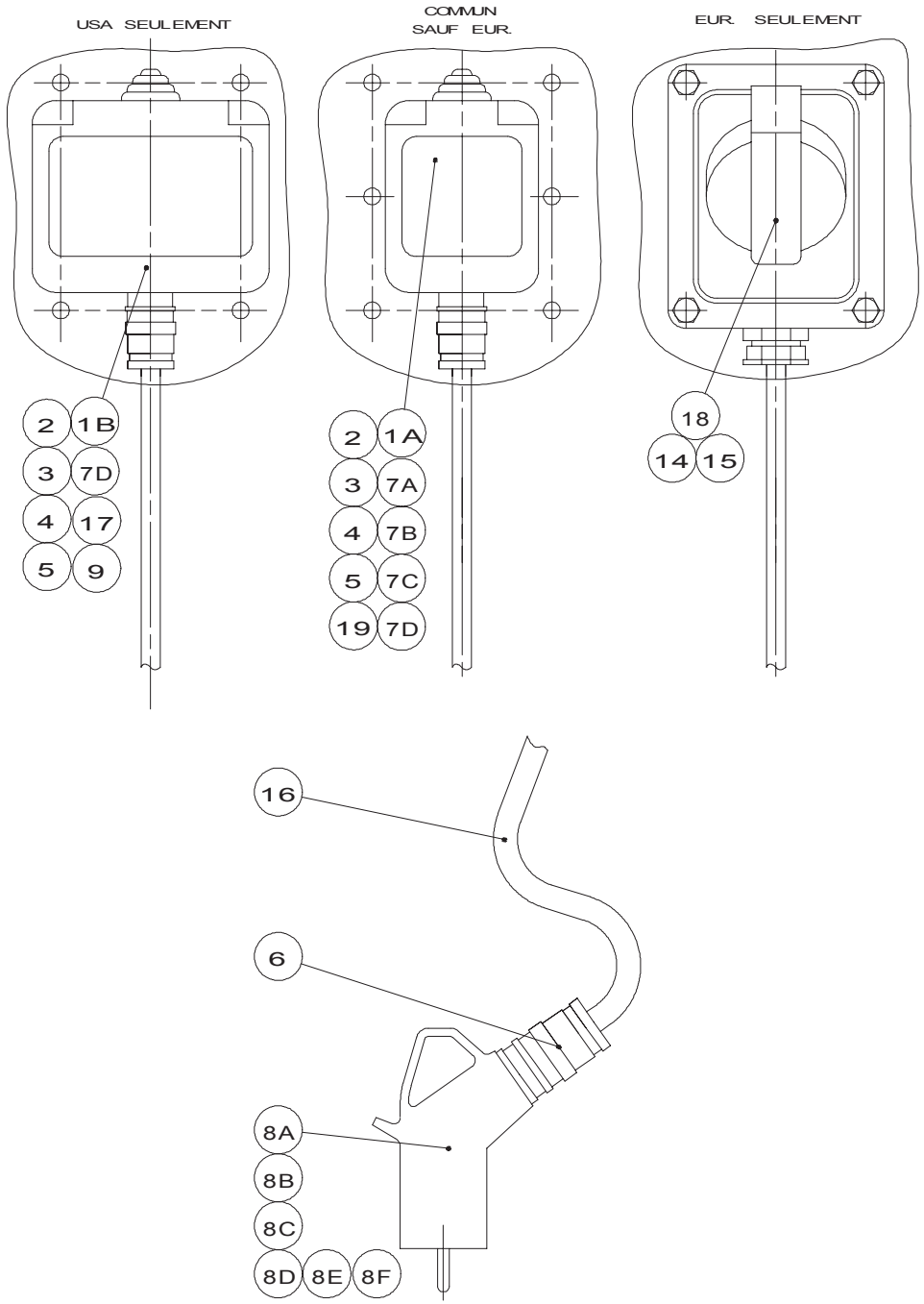
USA SEULEMENT
COMMUN
SAUF EUR.
EUR. SEULEMENT
2
1B
3
7D
4
17
5
9
2
1A
3
7A
4
7B
5
7C
19
7D
18
14
15
16
6
8A
8B
8C
8D
8E
8F

C15233 g

# ▲ ALIMENTATION 220V SUPPLY

◀ H3 ▶

| Rep. | Désignation | Designation | Specification | Qty | Code | Up to / jusqu'à |
|---|---|---|---|---|---|---|
| 1 | VIS | SCREW | H M4X20-20 CL.8.8 ZB | 2 | 2331231120 | |
| 1 | BOÎTIER | BOX | | 1 | 2440203650 | |
| 3 | RONDELLE À DENTS | TOOTH LOCK WASHER | DEC 4 ZB | 2 | 2351301050 | |
| 4 | ECROU | NUT | H M4 CL. 8 ZB | 2 | 2341221030 | |
| 5 | CONTRE-ÉCROU | LOCK NUT | CE 16 IN | 1 | 2420302030 | |
| 6 | PRESSE-ÉTOUPE | PACKING BOX | 13 | 1 | 2421602190 | |
| 7 | PRISE | PLUG SOCKET | 2P+T-16A | 1 | 2441605060 | |
| 7 | FICHE 2P+T | | FRANCE/ALLEMAGNE | 1 | 2440603970 | |
| 18 | PRESSE-ÉTOUPE RÉDUCTEUR | REDUCER PACKING BOX | 21/13 | 1 | 2441613050 | |
| 19 | PRESSE-ÉTOUPE RÉDUCTEUR | REDUCER PACKING BOX | 16/13 | 1 | 2441613040 | |

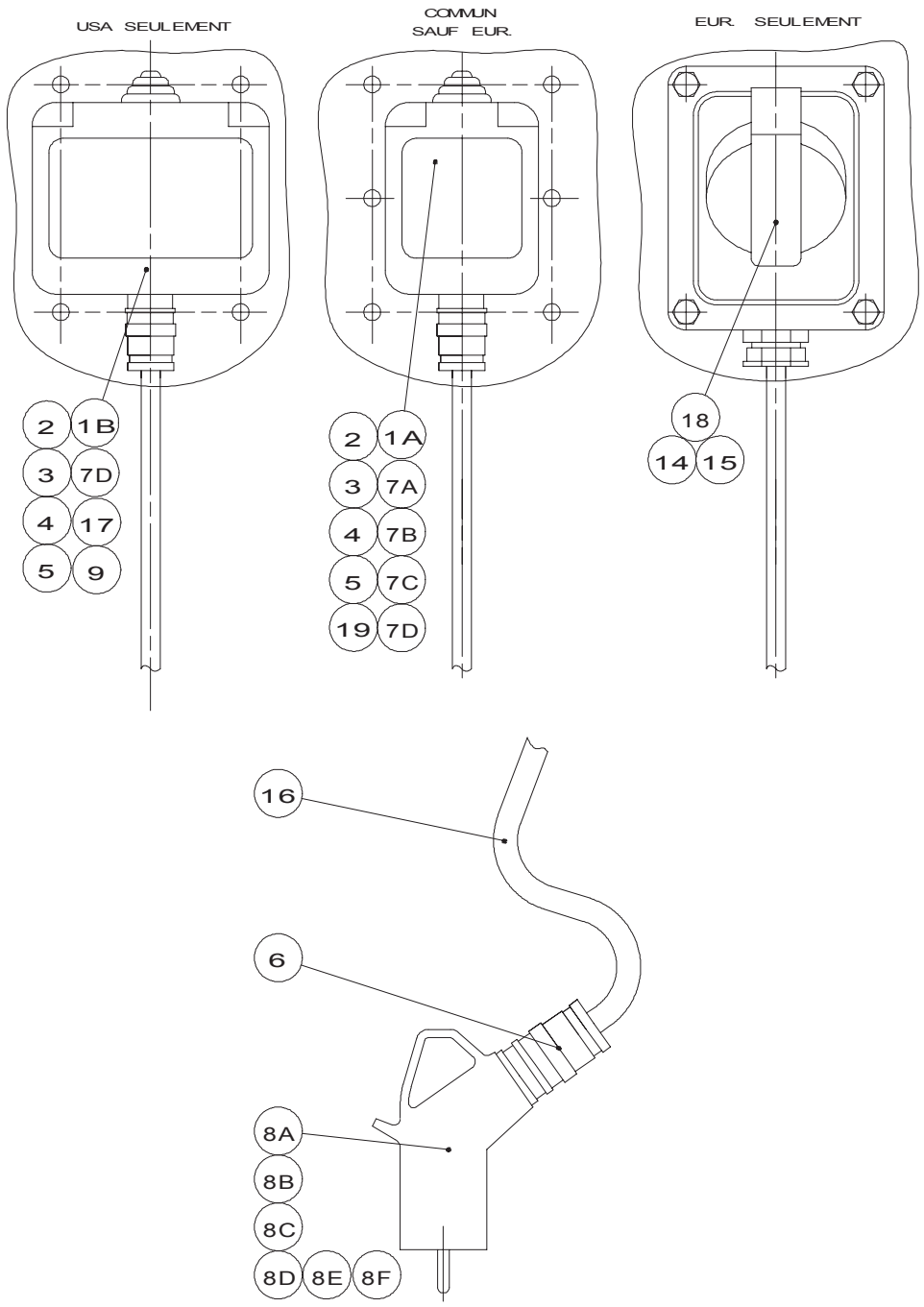
USA SEULEMENT
COMMUN
SAUF EUR.
EUR. SEULEMENT
2
1B
3
7D
4
17
5
9
2
1A
3
7A
4
7B
5
7C
19
7D
18
14
15
16
6
8A
8B
8C
8D
8E
8F

C15233 g

# ▲ ALIMENTATION 220V SUPPLY

◀ H4 ▶

| Rep. | Désignation | Designation | Specification | Qty | Code | Up to / jusqu'à |
|---|---|---|---|---|---|---|
| | BARRETTE CONNEXION | CONNECTING STRIP | 4 MM² | 1 | 2440203750 | |
| 2 | VIS | SCREW | H M4X20-20 CL.8.8 ZB | 2 | 2331231120 | |
| 3 | RONDELLE À DENTS | TOOTH LOCK WASHER | DEC 4 ZB | 2 | 2351301050 | |
| 4 | ECROU | NUT | H M4 CL. 8 ZB | 2 | 2341221030 | |
| 5 | CONTRE-ÉCROU | LOCK NUT | CE 16 IN | 1 | 2420302030 | |
| 6 | PRESSE-ÉTOUPE | PACKING BOX | 13 | 1 | 2421602190 | |
| 7 | PRISE | PLUG SOCKET | 2P+T-15A-125V | 2 | 2441605180 | |
| | *OBTURATEUR* | *SEAL* | | *1* | *2441500040* | |
| 8 | FICHE | PLUG | 2P+T | 1 | 2440603760 | |
| 9 | OBTURATEUR | SEAL | | 1 | 2441500040 | |
| 18 | PRESSE-ÉTOUPE RÉDUCTEUR | REDUCER PACKING BOX | 21/13 | 1 | 2441613050 | |
| 19 | PRESSE-ÉTOUPE RÉDUCTEUR | REDUCER PACKING BOX | 16/13 | 1 | 2441613040 | |
| | | | | | | |
| | | | | | | |
| | | | | | | |
| | | | | | | |
| | | | | | | |
| | | | | | | |
| | | | | | | |
| | | | | | | |
| | | | | | | |
| | | | | | | |
| | | | | | | |
| | | | | | | |
| | | | | | | |
| | | | | | | |

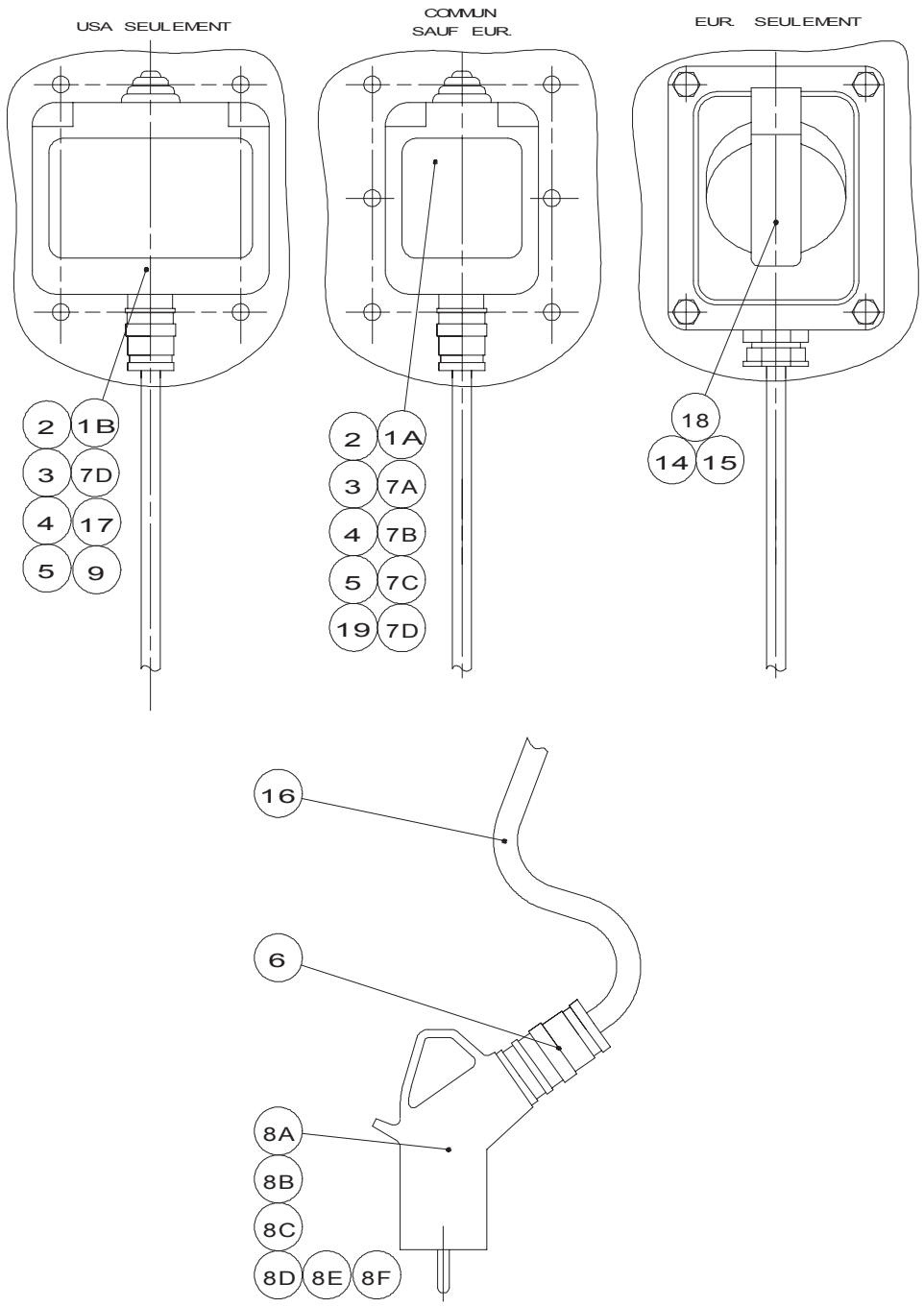
USA SEULEMENT
COMMUN
SAUF EUR.
EUR. SEULEMENT
2
1B
3
7D
4
17
5
9
2
1A
3
7A
4
7B
5
7C
19
7D
18
14
15
16
6
8A
8B
8C
8D
8E
8F

C15233 g

# ▲ ALIMENTATION 220V SUPPLY

◀ H5 ▶

| Rep. | Désignation | Designation | Specification | Qty | Code | Up to / jusqu'à |
|---|---|---|---|---|---|---|
| 8 | FICHE | PLUG | 16A 2P+T 220V | 1 | 2440603770 | |
| 11 | VIS | SCREW | H M6X20-20 CL.8.8 ZB | 4 | 2331231330 | |
| 12 | RONDELLE À DENTS | TOOTH LOCK WASHER | DD 6 ZB | 4 | 2351303070 | |
| 13 | ECROU | NUT | H M6 CL. 8 ZB | 4 | 2341221050 | |
| 14 | SOCLE | BASE | PC 16A 2P+T 220 | 1 | 2441904280 | |
| 15 | CONTRE-ÉCROU | LOCK NUT | 21 G 4021001 | 1 | 2440314130 | |
| | *TOURELLE / BRAS* | *TURRET/BOTTOM ARM PIN* | | *1* | *2901000160* | |
| 18 | PRESSE-ÉTOUPE RÉDUCTEUR | REDUCER PACKING BOX | 21/13 | 1 | 2441613050 | |
| | | | | | | |
| | | | | | | |
| | | | | | | |
| | | | | | | |
| | | | | | | |
| | | | | | | |
| | | | | | | |
| | | | | | | |
| | | | | | | |
| | | | | | | |
| | | | | | | |
| | | | | | | |
| | | | | | | |
| | | | | | | |
| | | | | | | |
| | | | | | | |
| | | | | | | |

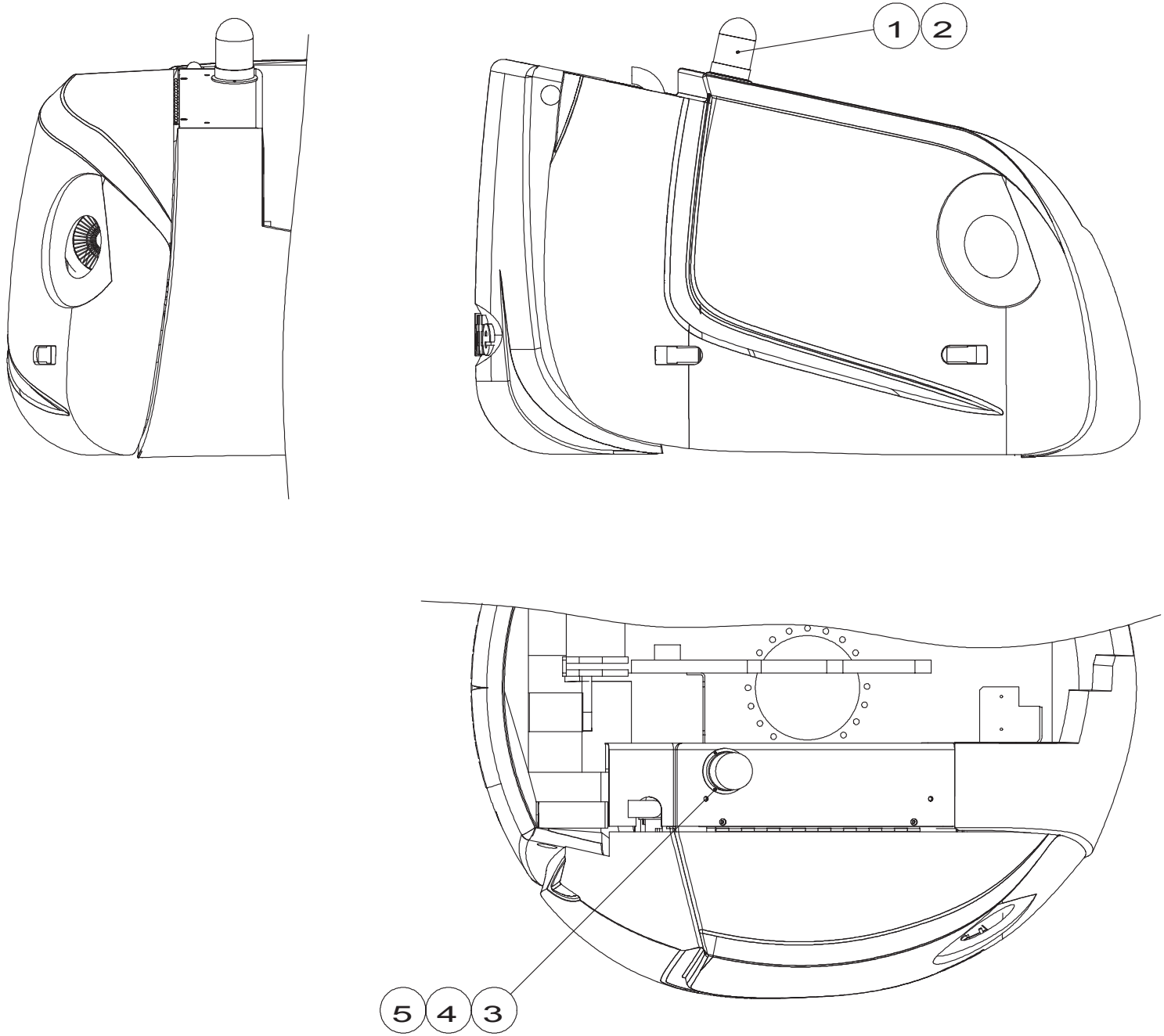


P20085 a

# ▲ GYROPHARE BEACON

◀ H6 ▶

| Rep. | Désignation | Designation | Specification | Qty | Code | Up to / jusqu'à |
|---|---|---|---|---|---|---|
| | INTER. UNIPOLAIRE LEVIER | SINGLE-POLE TOGGLE SWITCH | | 1 | 2440901650 | |
| | GYROPHARE | BEACON | H5 | 1 | 137C166800 | |
| | MODIFICATION | MODIFICATION | CAPOT COTÉ MOTEUR | 1 | 137P202170 | |
| 1 | GYROPHARE | BEACON | | 1 | 2440601310 | |
| 2 | LAMPE | LAMP | H1 12V 55W | 1 | 2441201060 | |
| 3 | VIS | SCREW | CHC M6X20-20 CL.8,8 ZB | 3 | 2308231490 | |
| 4 | ECROU AUTOFREINÉ | SELF-LOCKED NUT | H FR M6 CL. 8 ZB | 3 | 2349221490 | |
| 5 | RONDELLE PLATE | FLAT WASHER | LL 6 ZB | 3 | 2351124050 | |

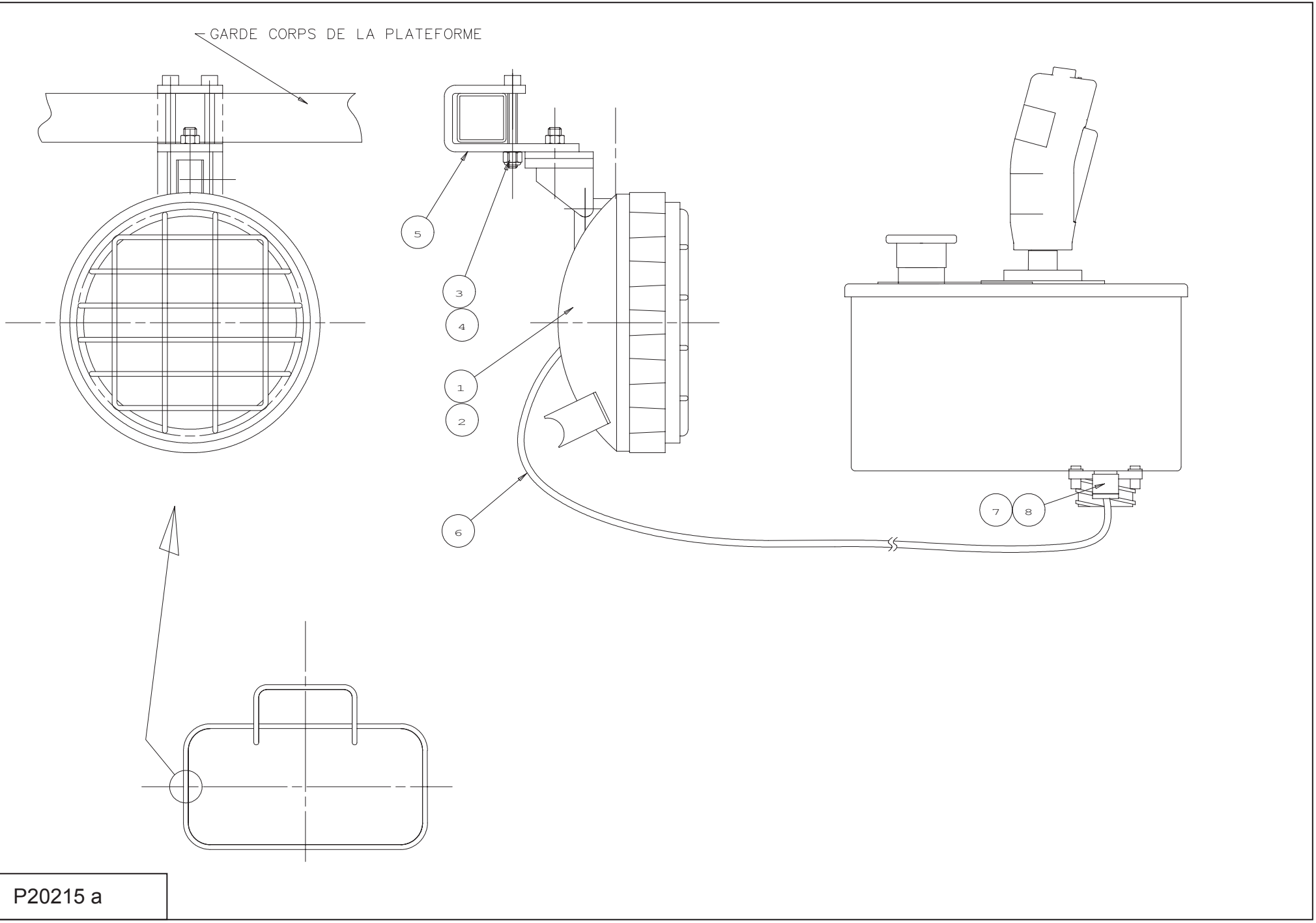


P20215 a

# ▲ PHARE DE TRAVAIL
# WORK HEADLIGHT

◀ H7 ▶

| Rep. | Désignation | Designation | Specification | Qty | Code | Up to / jusqu'à |
|---|---|---|---|---|---|---|
| 1 | PROJECTEUR | SPOTLIGHT | 24V | 1 | 2441603160 | |
| 2 | LAMPE | LAMP | H3- 12V- 70W | 1 | 2441202190 | |
| 3 | VIS | SCREW | H M6X50-50 CL.8.8 ZB | 2 | 2331231380 | |
| 4 | ECROU AUTOFREINÉ | SELF-LOCKED NUT | H FR M6 CL. 8 ZB | 2 | 2349221490 | |
| 5 | COLLIER | COLLAR | | 1 | 116C151080 | |
| 6 | FAISCEAU PHARE DE TRAVAIL | WORK HEADLIGHT | H6 | 1 | 137C166790 | |
| 7 | PRESSE-ÉTOUPE | PACKING BOX | 9 | 1 | 2421602150 | |
| 8 | CONTRE-ÉCROU | LOCK NUT | CE 9M REF:400 9009 | 1 | 2440314090 | |

# ▲ POT CATALYTIQUE
# CATALYTIC CONVERTER

◀ H8 ▶

| Rep. | Désignation | Designation | Specification | Qty | Code | Up to / jusqu'à |
|---|---|---|---|---|---|---|
| | POT CATALYTIQUE | CATALYTIC CONVERTER | MOTEUR DEUTZ F3L1011F | 1 | 2421608840 | |
| | | | | | | |
| | | | | | | |
| | | | | | | |
| | | | | | | |
| | | | | | | |
| | | | | | | |
| | | | | | | |
| | | | | | | |
| | | | | | | |
| | | | | | | |
| | | | | | | |
| | | | | | | |
| | | | | | | |
| | | | | | | |
| | | | | | | |
| | | | | | | |
| | | | | | | |
| | | | | | | |
| | | | | | | |
| | | | | | | |
| | | | | | | |
| | | | | | | |
| | | | | | | |
| | | | | | | |
| | | | | | | |

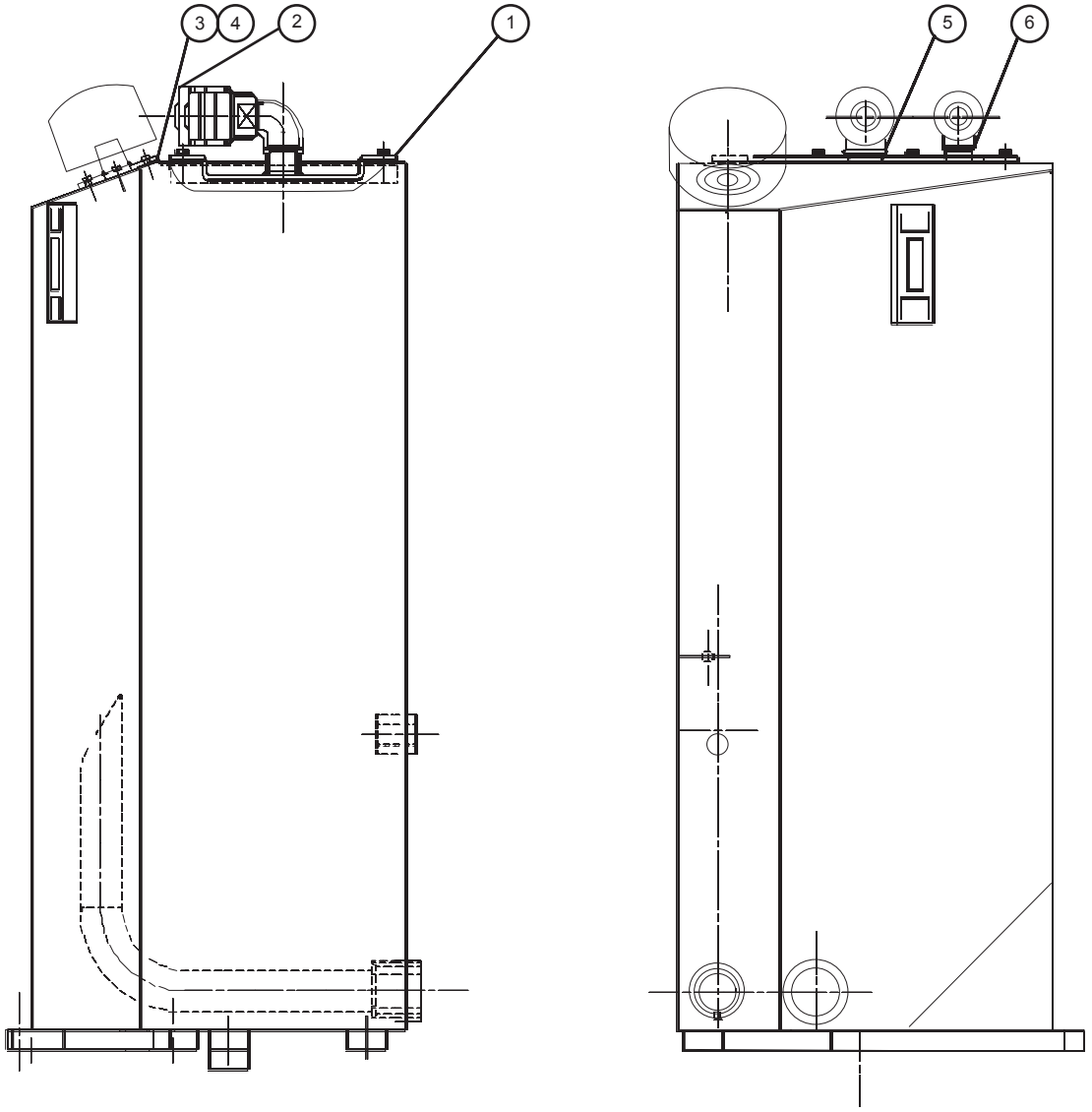


B15784

# ▲ VIDANGE+REMPLISSAGE
# EMPTYING AND FILLING



| Rep. | Désignation | Designation | Specification | Qty | Code | Up to / jusqu'à |
|---|---|---|---|---|---|---|
| | RENIFLARD FILTRE À AIR | SNIFFING VALVE AIR FILTER | | -1 | 2420208900 | |
| | PLAQUE DE FERMETURE | COVER PLATE | | -1 | 178C141900 | |
| 1 | PLAQUE DE FERMETURE | COVER PLATE | | 1 | 178B157830 | |
| 2 | COUPLEUR | COUPLING | | 1 | 2421101460 | |
| | *COUPLEUR* | *COUPLING* | *RÉF:WAO604400* | *1* | *2420315830* | |
| | *BOUCHON* | *PLUG* | *RÉF:WD0614400* | *1* | *2420210070* | |
| | *COUPLEUR* | *COUPLING* | *RÉF:WAO605400* | *1* | *2420315820* | |
| | *BOUCHON* | *PLUG* | *RÉF:WD0615400* | *1* | *2420210060* | |
| 3 | SUPPORT RENIFLARD | SNIFFING VALVE SUPPORT | | 1 | 173C148710 | |
| 4 | VIS | SCREW | CS M5X16 CL. 4.8 ZB | 1 | 2306329080 | |
| 5 | COUDE | BEND | N 92 -130 - 26MM - 1' | 1 | 2372120260 | |
| 6 | COUDE | BEND | N 92 -130 - 20MM - 3/4' | 1 | 2372120200 | |

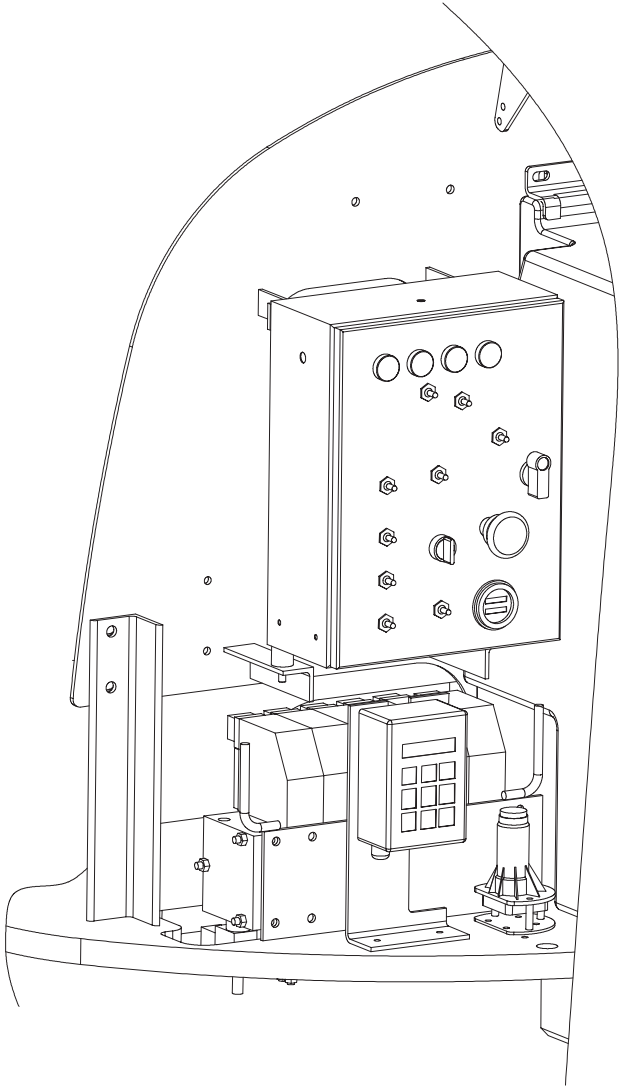

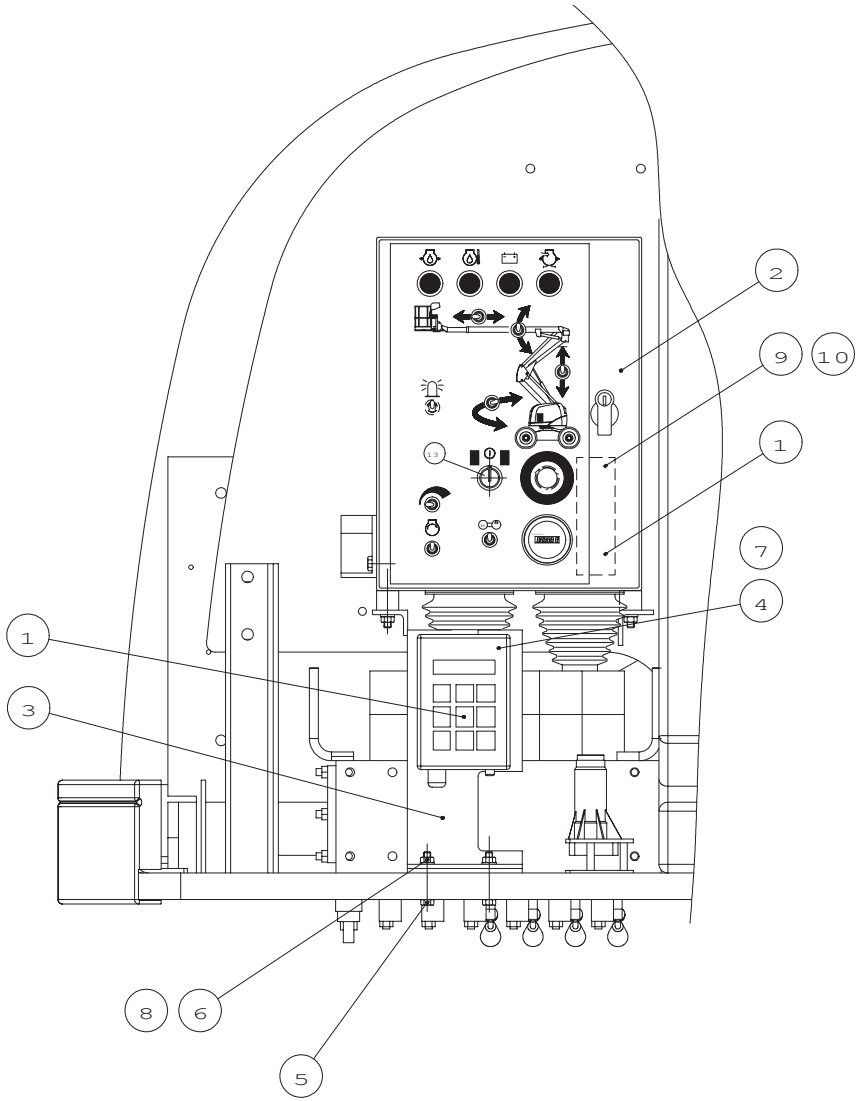


P20231 a

# ▲ MODULE DÉMARRAGE CODÉ
# CODED IGNITION MODULE



| Rep. | Désignation | Designation | Specification | Qty | Code | Up to / jusqu'à |
|---|---|---|---|---|---|---|
| 1 | BOÎTIER | BOX | | 1 | 2440203640 | |
| 2 | PERÇAGE COFFRET | GANTRY DRILLING | | 1 | 137P202300 | |
| 3 | SUPPORT | HOLDER | MODULE DE DÉMARRAGE | 1 | 178C155190 | |
| 4 | VIS | SCREW | H M4X16-16 CL.8.8 ZB | 3 | 2301231210 | |
| 5 | VIS | SCREW | H M6X50-18 CL.8.8 ZB | 2 | 2301231480 | |
| 6 | ECROU AUTOFREINÉ | SELF-LOCKED NUT | H FR M6 CL. 8 ZB | 2 | 2349221490 | |
| 7 | RONDELLE À DENTS | TOOTH LOCK WASHER | DEC 4 ZB | 3 | 2351301050 | |
| 8 | RONDELLE PLATE | FLAT WASHER | L 6 ZB | 2 | 2351123050 | |
| 9 | VIS | SCREW | CS M3X10 CL. 4.8 ZB | 2 | 2306334030 | |
| 10 | RONDELLE À DENTS | TOOTH LOCK WASHER | DEC 3 ZB | 2 | 2351301030 | |

# ▲ MODULE DE DÉMARRAGE COD
# CODED IGNITION MODULE



| Rep. | Désignation | Designation | Specification | Qty | Code | Up to / jusqu'à |
|---|---|---|---|---|---|---|
| | | | | | | |
| | | | | | | |
| | | | | | | |
| | | | | | | |
| | | | | | | |
| | | | | | | |
| | | | | | | |
| | | | | | | |
| | | | | | | |
| | | | | | | |
| | | | | | | |
| | | | | | | |
| | | | | | | |
| | | | | | | |
| | | | | | | |
| | | | | | | |
| | | | | | | |
| | | | | | | |
| | | | | | | |
| | | | | | | |
| | | | | | | |
| | | | | | | |
| | | | | | | |
| | | | | | | |
| | | | | | | |
| | | | | | | |
| | | | | | | |

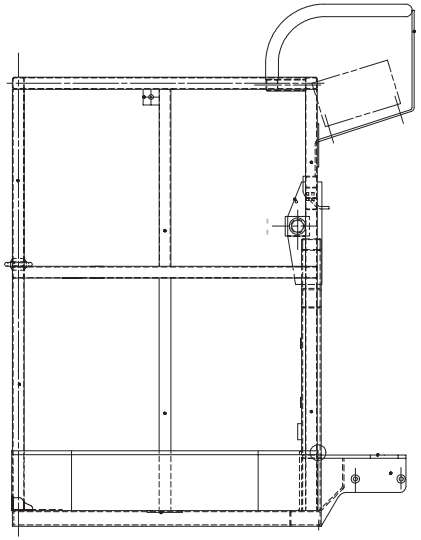

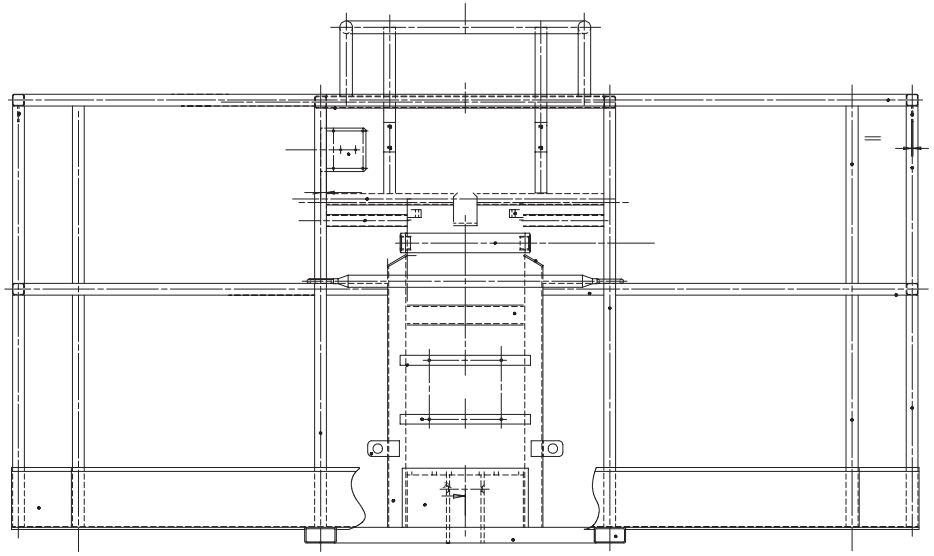

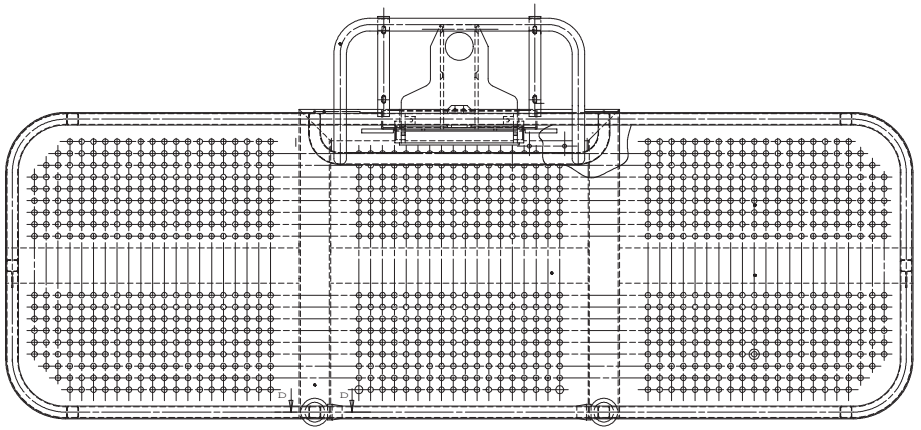

P20212 d

# ▲ PANIER LARGE
# WIDE BASKET

◀ H12 ▶

| Rep. | Désignation | Designation | Specification | Qty | Code | Up to / jusqu'à |
|---|---|---|---|---|---|---|
| | PLATE-FORME | PLATFORM | 1800X800 | -1 | 179P201030 | |
| | *BAGUE À COLLERETTE* | *FLANGED BEARING BUSH* | *30X34X26 DU* | *2* | *2390150190* | |
| | PLATE-FORME | PLATFORM | 2300*800 | 1 | 179P202120 | |
| | *BAGUE À COLLERETTE* | *FLANGED BEARING BUSH* | *30X34X26 DU* | *2* | *2390150190* | |
| | HAUTEUR PLANCHER+CHARGE | FLOOR HEIGHT + LOAD LABEL | (OPTION PANIER LARGE) | 1 | 307P205780 | |
| | HAUTEUR PLANCHER+CHARGE | FLOOR HEIGHT + LOAD LABEL | HA18 | -1 | 307P202410 | |
| | | | | | | |
| | | | | | | |
| | | | | | | |
| | | | | | | |
| | | | | | | |
| | | | | | | |
| | | | | | | |
| | | | | | | |
| | | | | | | |
| | | | | | | |
| | | | | | | |
| | | | | | | |
| | | | | | | |
| | | | | | | |
| | | | | | | |
| | | | | | | |
| | | | | | | |
| | | | | | | |
| | | | | | | |

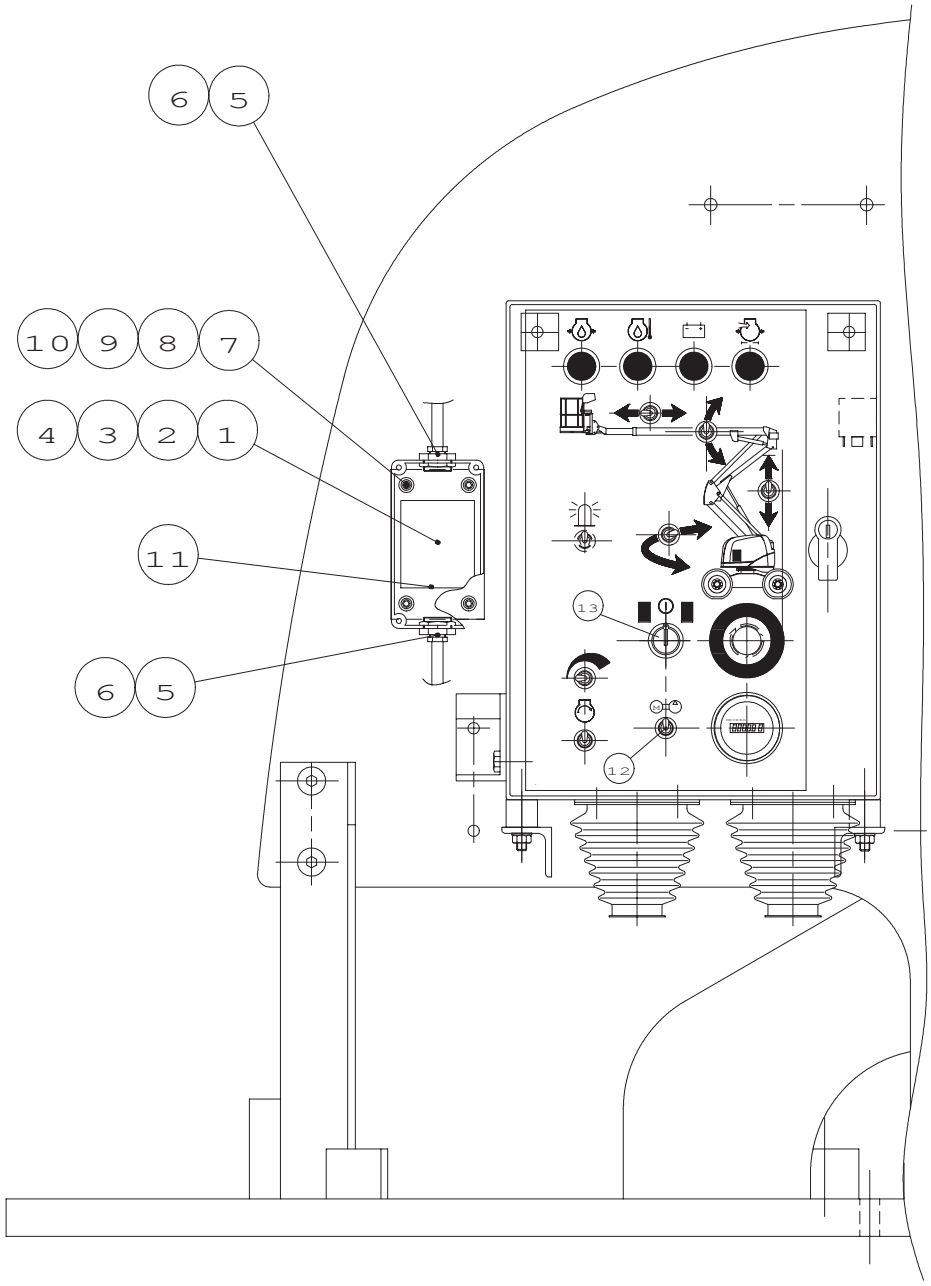


P20214 a

# ▲ DISJONCTEUR DIFFÉRENTIEL
# DIFFERENTIAL CIRCUIT BREAKER



| Rep. | Désignation | Designation | Specification | Qty | Code | Up to / jusqu'à |
|---|---|---|---|---|---|---|
| 1 | COFFRET | BOX | REF 80903 | 1 | 2440302230 | |
| 2 | DISJONCTEUR DIFFÉRENTIEL | DIFFERENTIAL CIRCUIT BREAKER | REF 20903 | 1 | 2440402040 | |
| 3 | BLOC JONCTION DE TERRE | TERRESTRIAL INTERFACE BLOCK | REF 39381 | 1 | 2440215150 | |
| 4 | BLOC CLOISON TERMINALE | TERMINAL PARTITION BLOCK | REF 39387 | 1 | 2440215160 | |
| 5 | PRESSE-ÉTOUPE RÉDUCTEUR | REDUCER PACKING BOX | 16/13 | 2 | 2441613040 | |
| 6 | CONTRE-ÉCROU | LOCK NUT | CE 16 M | 2 | 2440314120 | |
| 7 | RONDELLE PLATE | FLAT WASHER | M 5 ZB | 4 | 2351112040 | |
| 8 | RONDELLE À DENTS | TOOTH LOCK WASHER | DEC 5 ZB | 4 | 2351301060 | |
| 9 | ECROU | NUT | H M5 CL. 8 ZB | 4 | 2341221040 | |
| 10 | VIS | SCREW | CHC M5X30-30 CL.8,8 ZB | 2 | 2338231260 | |
| 11 | BARRETTE RAIL | RAIL BAR | | 1 | 2440205010 | |
| | | | | | | |
| | | | | | | |
| | | | | | | |
| | | | | | | |
| | | | | | | |
| | | | | | | |
| | | | | | | |
| | | | | | | |
| | | | | | | |
| | | | | | | |
| | | | | | | |
| | | | | | | |
| | | | | | | |
| | | | | | | |

# ▲ RÉCHAUFFEUR HUILE MOTEUR
# MOTOR OIL HEATER

◀ H15 ▶

| Rep. | Désignation | Designation | Specification | Qty | Code | Up to / jusqu'à |
|---|---|---|---|---|---|---|
| | MOTEUR THERMIQUE | INTERNAL COMBUSION ENGINE | DEUTZ- WISHER KIT- | 1 | 2431141280 | |
| | MOTEUR THERMIQUE | INTERNAL COMBUSION ENGINE | DEUTZ F3L1011F S5192 | -1 | 2431141260 | |
| | *CARTER DE COURROIE* | *BELT COVER* | | *1* | *2420317600* | |
| | *ALTERNATEUR* | *ALTERNATOR* | *14V 60A* | *1* | *2440105100* | |
| | *TÉMOIN COLMATAGE ÉLEC.* | *ELECTRIC CLOGGING INDICATOR* | | *1* | *2442201780* | |
| | *CÂBLAGE ALTERN DÉMAR.* | *STARTER ALTERNATOR CABLING* | | *1* | *2450315420* | |
| | *THERMO CONTACT* | *HEAT CONTACT* | | *1* | *2442001150* | |
| | *JAUGE* | *GAUGE* | | *1* | *2421003060* | |
| | *SUPPORT MOTEUR THERMIQUE* | *THERMAL MOTOR SUPPORT* | | *1* | *2421906680* | |
| | *RÉFRIGÉRANT HUILE MOTEUR* | *MOTOR OIL REFRIGERANT* | | *1* | *2421809140* | |
| | *CARTOUCHE FILTRE À AIR* | *AIR FILTER CARTRIDGE* | | *1* | *2427003000* | |
| | *MANO CONTACT* | *PRESSURE CONTROLLER* | | *1* | *2441303600* | |
| | *ACCÉLÉRATEUR* | *ACCELERATOR* | | *1* | *2440210680* | |
| | *DÉMARREUR* | *STARTER* | *12V 2,2KW* | *1* | *2440405080* | |
| | *MANUEL* | *MANUAL* | *ENTRETIEN ET PR* | *1* | *2420317610* | |
| | | | | | | |
| | | | | | | |
| | | | | | | |
| | | | | | | |
| | | | | | | |
| | | | | | | |
| | | | | | | |
| | | | | | | |
| | | | | | | |
| | | | | | | |
| | | | | | | |

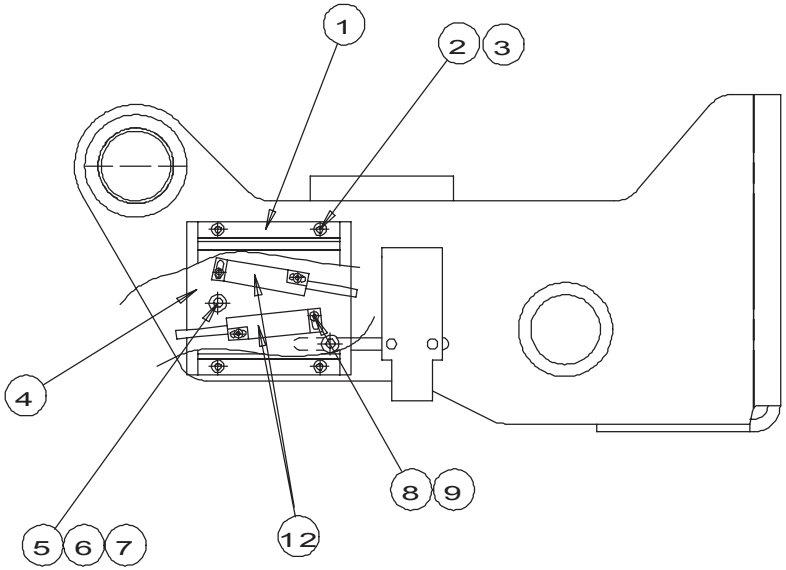


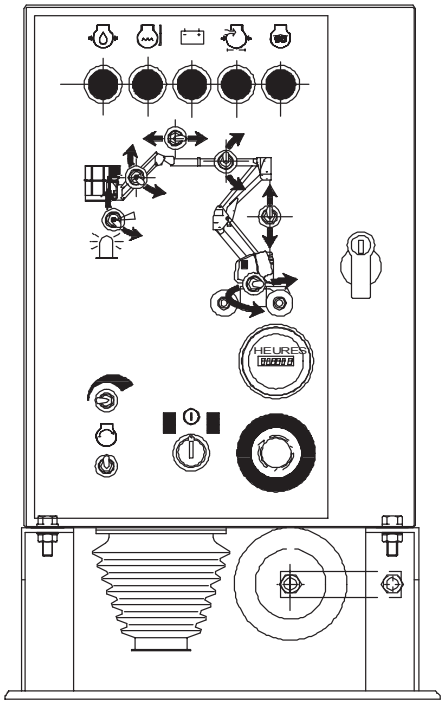


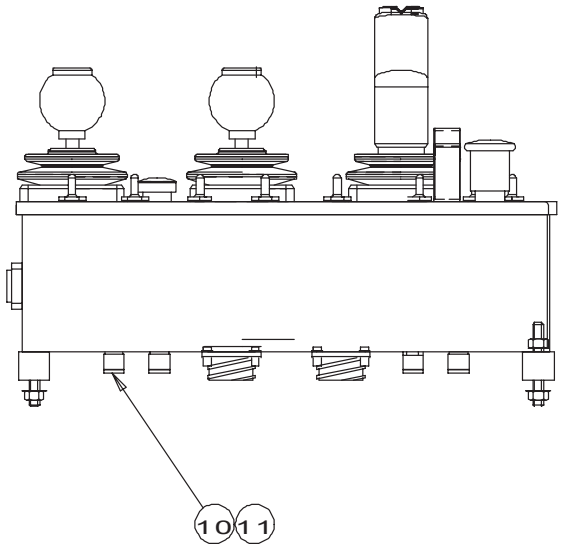


P23598 a

# ▲ SECURITÉ PANIER 'LOXAM'
# LOXAM BASKET SAFETY SYSTEM



| Rep. | Désignation | Designation | Specification | Qty | Code | Up to / jusqu'à |
|---|---|---|---|---|---|---|
| 1 | CAPOT | HOOD | PROTECTION CONTAC- | 1 | 182P232560 | |
| 2 | VIS | SCREW | CHC M4X8-8 CL.8.8 ZB | 4 | 2700100310 | |
| 3 | RONDELLE ÉLASTIQUE | RUBBER WASHER | W 4 ZB | 4 | 2351201030 | |
| 4 | SUPPORT | HOLDER | CONTACTEUR MERCURE | 1 | 182P232550 | |
| 5 | VIS | SCREW | CHC M5X20-20 CL8.8 ZB | 2 | 2308231320 | |
| 6 | RONDELLE PLATE | FLAT WASHER | M 5 ZB | 2 | 2351112040 | |
| 7 | ECROU | NUT | H M5 CL. 8 ZB | 2 | 2341221040 | |
| 8 | VIS | SCREW | CB M3X16-16 CL.8.8 ZB | 4 | 2306334110 | |
| 9 | RONDELLE À DENTS | TOOTH LOCK WASHER | DEC 3 ZB | 4 | 2351301030 | |
| 10 | PRESSE-ÉTOUPE | PACKING BOX | PLASTIQUE NOIR PG9 | 1 | 2901001270 | |
| 11 | CONTRE-ÉCROU | LOCK NUT | P-E PLATIQUE NOIR PG9 | 1 | 2901001280 | |
| 12 | CÂBLAGE | CABLES | TILT COMPENSATION | 1 | 182P201880 | |
| | *FAISCEAU* | *BUNDLE* | *TILT COMPENSATION* | *1* | *180P233220* | |
| | *JONCTION* | *JUNCTION* | *J2* | *1* | *2441003190* | |
| | | | | | | |
| | | | | | | |
| | | | | | | |
| | | | | | | |
| | | | | | | |
| | | | | | | |
| | | | | | | |
| | | | | | | |
| | | | | | | |
| | | | | | | |
| | | | | | | |
| | | | | | | |

Huile - BIO

# HUILE BIOLOGIQUE
# ORGANIC OIL



| Rep. | Désignation | Designation | Specification | Qty | Code | Up to / jusqu'à |
|---|---|---|---|---|---|---|
| | HUILE BIODEGRADABLE | BIODEGRADABLE OIL | USA | 1 | 3078148920 | |
| | HUILE BIODEGRADABLE | BIODEGRADABLE OIL | CEE | 1 | 3078148890 | |
| | | | | | | |
| | | | | | | |
| | | | | | | |
| | | | | | | |
| | | | | | | |
| | | | | | | |
| | | | | | | |
| | | | | | | |
| | | | | | | |
| | | | | | | |
| | | | | | | |
| | | | | | | |
| | | | | | | |
| | | | | | | |
| | | | | | | |
| | | | | | | |
| | | | | | | |
| | | | | | | |
| | | | | | | |
| | | | | | | |
| | | | | | | |
| | | | | | | |
| | | | | | | |
| | | | | | | |

# ▲ GASOIL BLANC
# WHITE DIESEL



| Rep. | Désignation | Designation | Specification | Qty | Code | Up to / jusqu'à |
|---|---|---|---|---|---|---|
| | | | | | | |
| | | | | | | |
| | | | | | | |
| | | | | | | |
| | | | | | | |
| | | | | | | |
| | | | | | | |
| | | | | | | |
| | | | | | | |
| | | | | | | |
| | | | | | | |
| | | | | | | |
| | | | | | | |
| | | | | | | |
| | | | | | | |
| | | | | | | |
| | | | | | | |
| | | | | | | |
| | | | | | | |
| | | | | | | |
| | | | | | | |
| | | | | | | |
| | | | | | | |
| | | | | | | |
| | | | | | | |
| | | | | | | |
| | | | | | | |

# ▲ HUILE PAYS CHAUDS
# OIL FOR HOT COUNTRIES



| Rep. | Désignation | Designation | Specification | Qty | Code | Up to / jusqu'à |
|---|---|---|---|---|---|---|
| | | | | | | |
| | | | | | | |
| | | | | | | |
| | | | | | | |
| | | | | | | |
| | | | | | | |
| | | | | | | |
| | | | | | | |
| | | | | | | |
| | | | | | | |
| | | | | | | |
| | | | | | | |
| | | | | | | |
| | | | | | | |
| | | | | | | |
| | | | | | | |
| | | | | | | |
| | | | | | | |
| | | | | | | |
| | | | | | | |
| | | | | | | |
| | | | | | | |
| | | | | | | |
| | | | | | | |
| | | | | | | |
| | | | | | | |
| | | | | | | |

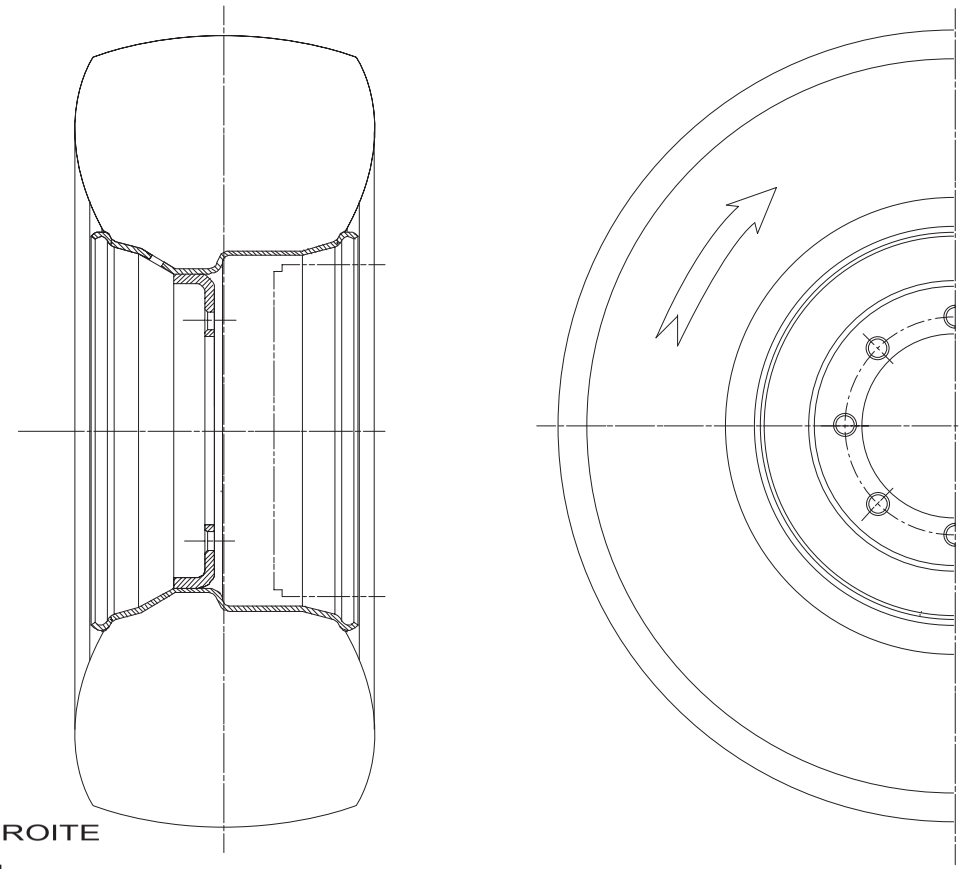

1 ROUE DROITE

B15996

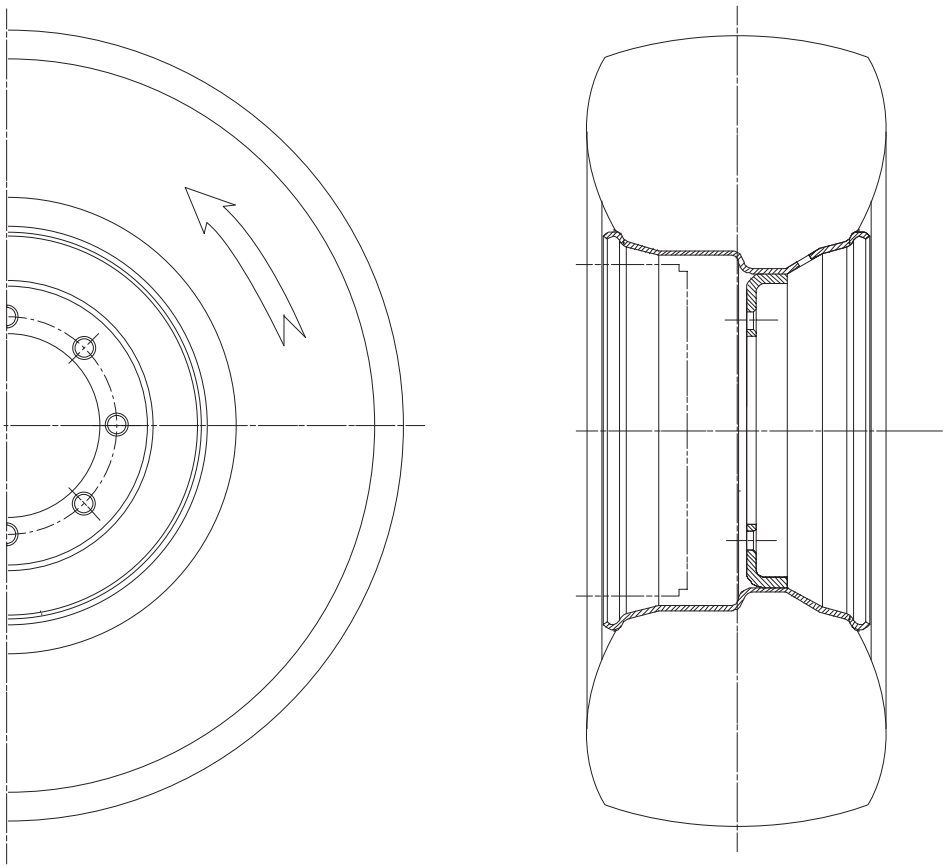

2 ROUE GAUCHE

B16052

# ▲ PNEU 'NO MARKING'
# NON MARKING TYRE

◀ H20 ▶

| Rep. | Désignation | Designation | Specification | Qty | Code | Up to / jusqu'à |
|---|---|---|---|---|---|---|
| 2 | ROUE GAUCHE | LEFT WHEEL | | -2 | 152B160520 | |
| | *JANTE* | *RIM* | | *1* | *2601002020* | |
| | *PNEU* | *TIRE* | | *1* | *2601602780* | |
| | *REMPL.MOUS. POLYURÉTHANE* | *FOAM FILLING* | | *1* | *E* | |
| 1 | ROUE DROITE | RIGHT WHEEL | | -2 | 152B159960 | |
| | *JANTE* | *RIM* | | *1* | *2601002020* | |
| | *PNEU* | *TIRE* | | *1* | *2601602780* | |
| | *REMPL MOUS. POLYURÉTHANE* | *FOAM FILLING* | | *1* | *E* | |
| | PNEU 'NO MARKING' | NON MARKING TYRE | PNEUMATIQUE BLANC | 2 | 152P214110 | |
| | *JANTE* | *RIM* | | *1* | *2601002020* | |
| | *PNEU 'NO MARKING'* | *NON MARKING TYRE* | | *1* | *2601602970* | |
| | *REMPL.MOUS. POLYURÉTHANE* | *FOAM FILLING* | | *1* | *E* | |
| | PNEU 'NO MARKING' | NON MARKING TYRE | PNEUMATIQUE BLANC | 2 | 152P214120 | |
| | *JANTE* | *RIM* | | *1* | *2601002020* | |
| | *PNEU 'NO MARKING'* | *NON MARKING TYRE* | | *1* | *2601602970* | |
| | *REMPL.MOUS. POLYURÉTHANE* | *FOAM FILLING* | | *1* | *E* | |
| | | | | | | |
| | | | | | | |
| | | | | | | |
| | | | | | | |
| | | | | | | |
| | | | | | | |
| | | | | | | |
| | | | | | | |
| | | | | | | |
| | | | | | | |

| English | Deutsch | Nederlands | Danska |
|---|---|---|---|
| « … REMOVE PIN » LABEL | ETIKETT "...SPINDEL ENTFERNEN" | ETIKET "...PEN VERWIJDEREN" | ETIKET "...FJERN TAP" |
| « 220 V SOCKET » LABEL | ETIKETT "220V-ANSCHLUß" | ETIKET "STEKKER 220V" | ETIKET "220 V-STIK" |
| « BODY CRUSHING » LABEL | ETIKETT "QUETSCHUNGSGEFAHR KÖRPER" | ETIKET "VERPLETTINGSGEVAAR LICHAAM" | ETIKET "MASNING AF KROP" |
| « BOTTOM PANEL » LABEL | ETIKETT "SCHALTPULT UNTEN" | ETIKET "LAAG PANEEL" | ETIKET "NEDERSTE KONTROLPANEL" |
| « DIRECTION OF TRAVEL » LABEL | ETIKETT "FAHRTRICHTUNG" | ETIKET "TRANSLATIERICHTING" | ETIKET "KØRERETNING" |
| « DO NOT INTERCHANGE » LABEL | ETIKETT "NICHT AUSTAUSCHEN" | ETIKET "NIET VERWISSELEN" | ETIKET "MÅ IKKE OMBYTTES..." |
| « DO NOT PARK » PARK | ETIKETT "PARKVERBOT" | ETIKET "NIET PARKEREN" | ETIKET "PARKERING FORBUDT" |
| « ELECTROCUTION » LABEL | ETIKETT "BERÜHRUNGSGEFAHR" | ETIKET "ELEKTROCUTIE" | ETIKET "ELEKTRISK STØD" |
| « EMERGENCY » LABEL | ETIKETT "NOTEINRICHTUNG" | ETIKET "NOODGEVAL" | ETIKET "NØDSTOP" |
| « HAND CRUSHING » LABEL | ETIKETT "QUETSCHUNGSGEFAHR HÄNDE" | ETIKET "VERPLETTINGSGEVAAR HANDEN" | ETIKET "MASNING AF HÅND" |
| « HYDRAULIC OIL » LABEL | ETIKETT "HYDRAULIKÖL" | ETIKET "HYDRAULISCHE OLIE" | ETIKET "HYDRAULIKOLIE" |
| « LUBRICATION » LABEL | ETIKETT "SCHMIERUNG" | ETIKET "SMERING" | ETIKET "SMØRING" |
| « OPERATING INSTRUCTIONS » LABEL | ETIKETT "BEDIENUNGSHINWEISE" | ETIKET "GEBRUIKSINSTRUCTIES" | ETIKET "DRIFTSANVISNINGER" |
| « TILT » LABEL | ETIKETT "NEIGUNG" | ETIKET "OVERHELLING" | ETIKET "HÆLDNING" |
| « WELDING EARTH » LABEL | ETIKETT "SCHWEIßMASSE" | ETIKET "LASMASSA" | ETIKET "SVEJSEEMNE" |
| 1/2 PIVOTING AXIS | 1/2 SCHWENKACHSE | 1/2 DRAAIAS | HALVAKSELTAP |
| 240V SOCKET POSITION | ETIKETT " PLATZ STECKER 240V" | ETIKET "PLAATSING STOPCONTACT 240V" | ETIKET "PLACERING AF 240V-STIK" |
| ACCELERATOR | BESCHLEUNIGER | VERSNELLER | SPEEDER |
| ACOUSTIC POWER | AKUSTISCHE LEISTUNG | GELUIDSVERMOGEN | STØJNIVEAU |
| ADAPTOR | ADAPTER | ADAPTER | ADAPTER |
| ADAPTOR | ADAPTER | AANPASSING | ADAPTER |
| ADDITIONAL COUNTERWEIGHT | ZUSÄTZLICHES GEGENGEWICHT | EXTRA CONTRAGEWICHT | EKSTRA MODVÆGT |
| ADJUSTABLE BEND | AUSRICHTBARER KRÜMMER | RICHTBARE KNIE | DREJBAR BØJNING |
| ADJUSTABLE BEND 135° JIC | AUSRICHTBARER KRÜMMER 135° JIC | RICHTBARE KNIE 135° JIC | DREJBAR BØJNING 135° JIC |
| ADJUSTING WASHER | PAßSCHEIBE | AANPASSINGSRING | JUSTERINGSSKIVE |
| AIR FILTER CARTRIDGE | LUFTFILTERKARTUSCHE | LUCHTFILTERPATROON | INDSATS TIL LUFTFILTER |
| ALTERNATOR | GENERATOR | WISSELSTROOMDYNAMO | VEKSELSTRØMSGENERATOR |
| ANGLE BRACKET | BEFESTIGUNGSWINKEL | BEVESTIGINGSHAAK | FASTGØRELSESJERN |
| ARM HINGE PIN | GELENKACHSE ARM | AS SCHARNIER ARM | LEDDELINGSAKSEL TIL ARM |
| ARM LIFT CYLINDER | ARMANHUBZYLINDER | HEFCILINDER ARM | ARMHÆVNINGSCYLINDER |
| ATTACHMENT DEVICE | BEFESTIGUNG | BEVESTIGING | FASTGØRELSE |
| AUSTRALIA | AUSTRALIEN | AUSTRALISCHE | AUSTRALSKE |
| BAFFLE PLATE | ABLENKPLATTE | DEFLECTOR | DEFLEKTOR |

| English | Deutsch | Nederlands | Danska |
|---|---|---|---|
| BAG OF SEALS | SATZ DICHTUNGEN | PAKKINGSET | PAKNINGSSÆT |
| BALANCE CARTRIDGE | AUSGLEICHSKARTUSCHE | PATROON VEREFFENING | UDLIGNINGSENHED |
| BALANCING VALVE | AUSGLEICHSVENTIL | BALANCEERKLEP | UDLIGNINGSVENTIL |
| BALL | KUGEL | KOGEL | KUGLE |
| BALL BEARING | KUGELLAGER | KOGELLAGER | KUGLELEJE |
| BASE | SOCKEL | SOKKEL | FUNDAMENT |
| BATTERY | BATTERIE | ACCU | BATTERI |
| BATTERY SUPPORT | BATTERIEHALTER | ACCUSTEUN | BATTERIHOLDER |
| BEACON | RUNDUMLEUCHTE | ZWAAILICHT | BLINKLYS |
| BEARING PIN | WÄLZLAGERACHSE | LAGERPEN | AKSEL TIL RULLELEJE |
| BELT COVER | RIEMENKASTEN | DRIJFRIEMKAST | DRIVREMSDÆKSEL |
| BEND | KRÜMMER | KNIE | BØJNING |
| BIODEGRADABLE OIL | ABBAUBARES ÖL | BIOLOGISCH AFBREEKBARE OLIE | BIOLOGISK NEDBRYDELIG OLIE |
| BLOCK | KÖRPER | LICHAAM | KAPPE |
| BOLT | GELENKACHSE | SCHARNIERPEN | LEDDELINGSAKSEL |
| BOOM | AUSLEGER | BOOM | UDLIGGER |
| BOOM POST | AUSLEGERSCHAFT | SCHACHT VAN DE BOOM | UDLIGGERSTANG |
| BOOM SUPPORT | AUSLEGERTRÄGER | BOOMSTEUN | UDLIGGERKONSOL |
| BOTTOM ARM | UNTERER ARM | ONDERSTE ARM | NEDRE ARM |
| BOTTOM PART | UNTERER BEREICH | ONDERSTE GEDEELTE | NEDERSTE DEL |
| BOTTOM PIVOTING AXIS | UNTERE SCHWENKACHSE | AS ONDERSTE SPIL | NEDRE STYRETAP |
| BOTTOM TIE ROD | UNTERE ZUGSTANGE | ONDERSTE STANG | NEDRE TRÆKSTANG |
| BOX | SCHALTKASTEN | KAST | SKAB |
| BOX | KASTEN | DOOS | HUS |
| BRACE | ZWISCHENSTÜCK | TUSSENSTUK | MELLEMSTYKKE |
| BRAID (NOT FELT) | BAND (KEIN FILZ) | NIET-VILTEN GALON | KANT IKKE FILT |
| BUNDLE | KABELSTRANG | BUNDEL | BUNDT |
| CABLE | KABEL | KABEL | KABEL |
| CABLE CLIP | BEFESTIGUNGSSCHELLE | BEVESTIGINGSBEUGEL | FASTSPÆNDINGSKLEMME |
| CABLE HOLDER CHAIN | KABELTRÄGERKETTE | KETTING KABELHOUDER | KABELKÆDE |
| CABLES | VERDRAHTUNG | BEDRADING | KABELFØRING |
| CAGED NUT | KÄFIGMUTTER | MOER KAST | MØTRIK TIL HUS |
| CAP | SKAPPE | SKAPJE | HÆTTE |
| CATALYTIC CONVERTER | KATALYSATOR | KATALYTISCHE POT | KATALYSATOR |
| CENTRE HINGE BOLT | MITTLERE GELENKACHSE | CENTRALE AS GEWRICHT | AKSEL TIL CENTRAL LEDDELING |

| English | Deutsch | Nederlands | Danska |
|---|---|---|---|
| CENTRE HOOD | MITTLERE SCHUTZABDECKUNG | CENTRALE KAP | MIDTERSKÆRM |
| CENTRING STOP | ZENTRIERANSCHLAG | CENTRERINGSAANSLAG | CENTRALT ENDESTOP |
| CHAIN (DOUBLE SERIES) | SERIEN-DOPPELSCHELLE | BEUGEL DUBBELE SERIE | KÆDE (DOBBELTMODEL) |
| CHAIN (STANDARD SERIES) | SERIEN-STANDARDSCHELLE | BEUGEL STANDAARD SERIE | KÆDE (STANDARDMODEL) |
| CHASSIS HYDRAULICS | GESTELLHYDRAULIK | HYDRAULISCH CHASSIS | HYDRAULIK CHASSIS |
| CHOCK | KEIL | WIG | KILE |
| CIRCUIT SELECTOR SWITCH | KREISSCHALTER | CIRCUITSELECTOR | KREDSLØBSVÆLGER |
| CLIP RECEPTACLE | AUFNAHME MIT CLIPBEFESTIGUNG | IN TE CLIPSEN HOUDER | OPSAMLINGSBAKKE MED KLEMME |
| CODED IGNITION MODULE | KODIERTES ANLAßMODUL | GECODEERDE START | KODET STARTMODUL |
| CODED IGNITION MODULE | KODIERTES ANLAßMODUL | GECODEERDE START | KODET STARTMODUL |
| COIL | DROSSEL | SPOEL | SPOLE |
| COLLAR | SCHELLE | BAND | KLEMME |
| COMMON EXCEPT USA / CANADA | GLEICH AUßER USA/KANADA | UNIVERSEEL BEHALVE USA / CANADA | FÆLLES UNDTAGET USA/CANADA |
| COMPENSATION INPUT CYLINDER | EINFAHRAUSGLEICHSZYLINDER | ONTVANGENDE COMPENSATIECILINDER | KOMPENSATIONSMODTAGERCYLINDER |
| COMPENSATION OUTPUT CYLINDER | AUSFAHRAUSGLEICHSZYLINDER | UITGAANDE COMPENSATIECILINDER | KOMPENSATIONSSENDERCYLINDER |
| COMPRESSION SPRING | DRUCKFEDER | COMPRESSIEVEER | KOMPRESSIONSFJEDER |
| COMPUTER | RECHNER | COMPUTER | REGNEMASKINE |
| CONICAL SPRING WASHER | | | |
| CONNECTING ROD | PLEUELSTANGE | DRIJFSTANG | PLEJLSTANG |
| CONNECTING SOCKET | REDUZIERSTÜCK M-F JIC | REDUCTIE M-F JIC | REDUKTIONSRING M-F JIC |
| CONNECTING STRIP | ANSCHLUßLEISTE | VERBINDINGSSTAAFJE | CELLEBRO |
| CONTACTOR | SCHALTSCHÜTZ | CONTACTSLUITER | KONTAKT |
| CONTROL PIN | STEUERACHSE | AANDRIJFAS | DRIVAKSEL |
| CONTROL PLATFORM CONNECTOR | VERBINDUNGSTEIL PLATTFORM | VERBINDINGSSTUK PLATFORM | FORBINDELSESDEL PLATFORM-KONNEKTOR |
| CONTROL SUPPORT | STEUERUNGSTRÄGER | RICHTINGBESTURING | BETJENINGSHOLDER |
| COPPER SEAL | KUPFERVERBINDUNG | KOPERPAKKING | KOBBERSAMLING |
| COUNTERWEIGHT | GEGENGEWICHT | TEGENGEWICHT | KONTRAVÆGT |
| COUPLING | KUPPLUNG | KOPPELING | KONTROLLER |
| COVER | DECKEL | DEKSEL | DÆKSEL |
| COVER HINGE | ABDECKUNGSSCHARNIER | SCHARNIER KAP | HÆNGSEL TIL SKÆRM |
| COVER PLATE | VERSCHLUßPLATTE | SLUITINGSPLAAT | LUKNINGSPLADE |
| CYLINDER AXIS | ZYLINDERACHSE | CILINDERAS | CYLINDERAKSEL |
| CYLINDER FOOT PIN | ACHSE ZYLINDERFUß | AS CILINDERVOET | AKSEL CYLINDERBUND |
| CYLINDER NOSE-PIECE PIN | ACHSE ZYLINDERZAPFEN | AS CILINDERNEUS | AKSEL CYLINDERSPIDS |
| CYLINDER ROD GUIDE | KOLBENSTANGENFÜHRUNG | CILIDERPENGELEIDER | CYLINDERSTYRESTANG |

| English | Deutsch | Nederlands | Danska |
|---|---|---|---|
| CYLINDRICAL STOP | ZYLINDRISCHER ANSCHLAG | CILINDERAANSLAG | CYLINDERENDESTOP |
| DENMARK LABELS | ETIKETTEN DÄNEMARK | LABELS DENEMARKEN | MÆRKATER DANMARK |
| DIFFERENTIAL CIRCUIT BREAKER | LEISTUNGSSCHUTZSCHALTER | DIFFERENTIËLE STROOMONDERBREKER | DIFFERENTIALAFBRYDER |
| DIRECTION CENTRE PIN | ZENTRALE LENKACHSE | CENTRALE STUURAS | MIDTERAKSEL TIL RETNINGSREGULERING |
| DIRECTION LEVER | LENKHEBEL | STUURHENDEL | LØFTESTANG TIL RETNING |
| DIRECTION PIVOT | LENKZAPFEN | STUURPEN | STYRINGSAKSEL |
| DISK | SCHEIBE | SCHIJF | PLADE |
| DISTRIBUTION BLOCK | VERTEILBLOCK | VERDEELBLOK | FORDELINGSHUS |
| DOCUMENT BOX | DOKUMENTENFACH | DOCUMENTENKAST | DOKUMENTHUS |
| DOUBLE ROD | DOPPELROHR | DUBBELE STOK | DOBBELT RØR |
| DRAINAGE PLUG | ABLAßSTOPFEN | AFTAPPLUG | TØMNINGSSTUDS |
| DRIVING AXLE-(TREE) | ANTRIEBSACHSE | AANDRIJFAS | DRIVAKSEL |
| ELASTIC SHAFT RING | ELASTISCHER WELLENRING | ELASTISCHE RING AS | GUMMIRING AKSEL |
| ELECTRIC CLOGGING INDICATOR | LEUCHTE FÜR ELEKTRISCHE KOLMATION | CONTROLELAMPJE ELEKTRISCHE AFDICHTING | ELEKTRISK TILSTOPNINGSKONTROLLAMPE |
| ELECTRIC PUMP CONTACT SWITCH FITTING | EINBAU SCHALTSCHÜTZ ELEKTROPUMPE | MONTAGE ELEKTROPOMP SCHAKELAAR | MONTERING ELEKTROPUMPEKONTAKT |
| ELECTRICITY | ELEKTRIZITÄT | ELEKTRICITEIT | ELEKTRICITET |
| ELECTROPUMP UNIT | ELEKTROPUMPE | ELEKTROPOMPGROEP | ELEKTROPUMPE-AGREGATER |
| EMPTYING AND FILLING | ÖLWECHSEL (LEEREN UND FÜLLEN) | AFLATEN EN VULLEN | AFTAPNING OG PÅFYLDNING |
| EQUAL T-PIECE | GLEICHSEITIGES T-STÜCK | GELIJKE T | T-STYKKER |
| EQUAL T-PIECE JIC | GLEICHSEITIGES T-STÜCK JIC | GELIJKE T JIC | T-STYKKER JIC |
| EVEN BEND | GLEICHSEITIGER KRÜMMER | GELIJKE KNIE | ENS BØJNING |
| EXTREMELY LOW-HEADED SCREW | SEHR NIEDRIGE KOPFSCHRAUBE | BOUT ZEER LAGE KOP | SKRUE MED MEGET LAVT HOVED |
| FINLAND LABELS | ETIKETTEN FINNLAND | FINSE OPSCHRIFTEN | ETIKETTER (FINSKE) |
| FIXING COLLAR | STOPPRING | STOPRING | STOPRING |
| FLANGE | FLANSCH | BEUGEL | BESLAG |
| FLANGED BEARING BUSH | FLANSCHRING | RING MET MOF | KRAVERING |
| FLAT WASHER | FLACHE UNTERLEGSCHEIBE | PLATTE RING | FLAD SKIVE |
| FLEXIBLE | SCHLAUCH | FLEXIBELE VERBINDING | SLANGE |
| FLEXIBLE CHAIN SUPPORT | TRÄGER SCHALTSCHRANK | STEUN FLEXIBELE BEUGEL | HOLDER SLANGEKOBLING |
| FLEXIBLE COUPLINGS GUIDE STAR | SCHLAUCHFÜHRERSTERN | STER GIDS SLANGEN | STJERNEFORBINDELSE TIL SLANGER |
| FLEXIBLE GUIDE CHAIN | SCHLAUCHFÜHRUNGSKETTE | FLEXIBELE KETTING GELEIDER | KÆDE TIL BEVÆGELIG STYRESKINNE |
| FLEXIBLE GUIDE SUPPORT | SCHLAUCHFÜHRUNGSTRÄGER | STEUN FLEXIBELE GELEIDING | BÆRESTYKKE TIL FLEKSIBEL GLIDESKINNE |
| FLEXIBLE PIN | FEDERSTIFT | SPLITPEN | FLEKSIBEL STIFT |

| English | Deutsch | Nederlands | Danska |
|---|---|---|---|
| FLEXIBLE SHEATH | FLEXIBLER MANTEL | BUIGZAME LEIDING | BLØD KAPPE |
| FLOOR HEIGHT + LOAD LABEL | ETIKETT AUSLEGERHÖHE + LAST | OPSCHRIFT HOOGTE PLATFORM + BELASTING | ETIKET GULVHØJDE OG -BELASTNING |
| FLOW DIVIDER | DURCHSATZTEILER | VERMOGENSDELER | FLOWFORDELER |
| FOAM FILLING | FÜLLSCHAUM | VULLEN SCHUIM | SKUMFYLD |
| FOAM FILLING | FÜLLSCHAUM | VULLEN SCHUIM | SKUMFYLD |
| FRAME COWLING | ABDECKUNG GESTELL | KAPPEN FRAME | SKÆRM TIL CHASSIS |
| FRANCE LABELS | ETIKETTEN FRANKREICH | LABELS FRANKRIJK | MÆRKATER FRANKRIG |
| FRONT HOOD | VORN SCHUTZABDECKUNG | VOOR KAP | FORAN SKÆRM |
| FUEL TANK | KRAFTSTOFFTANK | BRANDSTOFREVERSOIR | BRÆNDSTOFSTANK |
| FUSE | SICHERUNG | ZEKERING | SIKRING |
| FUSE HOLDER | SICHERUNGSHALTER | ZEKERINGHOUDER | SIKRINGSHOLDER |
| GANTRY DRILLING | BOHRUNG SCHALTKASTEN | BORING KAST | GENNEMBORING AF KASSE |
| GAS SPRING | GASFEDER | GASVEER | GASFJEDER |
| GAUGE | MEßSTAB | PEILSTOK | OLIEMÅLEPIND |
| GB LABELS | ETIKETTEN GB | ENGELSE OPSCHRIFTEN | ETIKETTER (ENGELSKE) |
| GREEN ARROW | GRÜNER PFEIL | GROENE PIJL | GRØN PIL |
| GUIDE PAD | FÜHRUNGSKUFE | GELEIDINGSGLIJSCHOEN | GLIDESKO |
| GUIDE RING | FÜHRUNGSRING | GELEIDERING | STYRERING |
| HARNESS | VORGELEGE | HARNAS | SELE |
| HEAD | KOPF | KOP | HOVED |
| HEAT CONTACT | THERMOKONTAKT | THERMOCONTACT | VARMEFØLSOM KONTAKT |
| HEX CAP SCREW | SCHRAUBE MIT RINGSCHNEIDE | BOUT MET PUNT BAK | SKRUE MED SEKSKANTET HOVED |
| HIGH SPEED CUT-OFF | ABSCHALTUNG HOHE GESCHWINDIGKEIT | UITSCHAKELEN H.S. | AFBRYDELSE HØJ HASTIGHED |
| HINGE PIN | GELENKACHSE | AS SCHARNIER | LEDFORBINDELSESAKSEL |
| HOLDER | HALTERUNG | STEUN | KONSOL |
| HOLLAND LABELS | ETIKETTEN HOLLAND | NEDERLANDSE OPSCHRIFTEN | ETIKETTER (HOLLANDSKE) |
| HOOD | ABDECKUNG | KAP | KAPPE |
| HOOD STOP | ANSCHLAG ABDECKUNG | KAPAANSLAG | ENDESTOP FOR SKÆRMPLADE |
| HOSE TIGHTENING IRON | ANZIEHPLATTE SCHLAUCH | KLEMVLAK VOOR FLEXIBELE LEIDINGEN | SPÆNDFLADE SLANGE |
| HYDRAULIC DIAGRAM | HYDRAULIKSCHEMA | HYDRAULISCH SCHEMA | HYDRAULISK SKEMA |
| HYDRAULIC PARTITION | HYDRAULIKABTRENNUNG | HYDRAULISCHE SCHOT | HYDRAULIKSKÆRM |
| HYDRAULIC PUMP | HYDRAULIKPUMPE | HYDRAULISCHE POMP | HYDRAULISK PUMPE |
| HYDRAULIC RESERVOIR | WASSERTANK | HYDRAULISCH RESERVOIR | HYDRAULIKTANK |
| HYDRAULIC RESERVOIR KIT | KIT WASSERTANK | KIT HYDRAULISCH RESERVOIR | UDSTYR TIL HYDRAULISK BEHOLDER |
| INTERNAL COMBUSION ENGINE | THERMOMOTOR | THERMISCHE MOTOR | TERMISK MOTOR |

| English | Deutsch | Nederlands | Danska |
|---|---|---|---|
| ITALY LABELS | ETIKETTEN ITALIEN | LABELS ITALIË | MÆRKATER ITALIEN |
| JIB CYLINDER | PENDELARMZYLINDER | VIJZEL SLINGER | FJERNUDLIGGERCYLINDER |
| JIB RAISING JACK | AUSLEGERANHUBZYLINDER | HEFCILINDER BOOM | UDLIGGERCYLINDER |
| JIC NUT | MUTTER JIC | MOER JIC | JIC MØTRIK |
| JUNCTION | VERBINDUNG | VERBINDING | SAMLING |
| LABELS | ETIKETTEN | ETIKETTEN | ETIKETTER |
| LABELS | ETIKETTEN | OPSCHRIFTEN | ETIKETTER |
| LAMP | LEUCHTE | LAMP | LAMPE |
| LEFT HOOD | LINKE SCHUTZABDECKUNG | LINKER KAP | VENSTRE SKÆRM |
| LEFT LINK | LINKER SCHWINGARM | DRIJFSTANG LINKS | LILLE FORBINDELSESSTANG VENSTRE |
| LEFT WHEEL | LINKES RAD | LINKER WIEL | VENSTRE HJUL |
| LEVEL | STAND | PEIL | STAND |
| LEVER | HEBEL | HENDEL | LØFTESTANG |
| LEVER-OPERATED SEALED LATCH | ABGEDICHTETE KLINKE MIT HEBEL | DICHTE PAL MET HENDEL | SIKKERHEDSLÅS MED VIPPEANORDNING |
| LINING HOLDER PLATE | PLATTE TÜR VERKLEIDUNG | PLAAT STEUN BESLAG | BAKKE TIL TILBEHØR |
| LOAD ON ONE WHEEL | LAST AUF EINEM RAD | BELASTING OP 1 WIEL | BELASTNING PÅ ET HJUL |
| LOCK BOLT / PLUG SCREW | KAPSELVERSCHLUSS | VERZEGELDE STOP | BESKYTTELSESLÅG |
| LOCK NUT | BREMSMUTTER | MOER REM | MØTRIK BREMSE |
| LOCK NUT | GEGENMUTTER | CONTRAMOER | KONTRAMØTRIK |
| LOGO | GRAPHIK | OPSCHRIFT | SKRIFT |
| LOWER PART CHASSIS | GESTELL UNTERER TEIL | CHASSIS LAAG GEDEELTE | CHASSIS NEDRE DEL |
| LOWER PENDULAR TIE ROD | UNTERE PENDEL-ZUGSTANGE | TREKSTANG ARM SLINGER | NEDERSTE TRÆKSTANG UDLIGGER |
| LOW-HEADED KNURLED SCREW | NIEDRIGE GERIEFTE KOPFSCHRAUBE | BOUT MET GEKARTELDE PUNT LAAG | ROULLETERET SKRUE MED LAVT HOVED |
| LOXAM BASKET SAFETY SYSTEM | KORBSICHERHEIT "LOXAM" | VEILIGHEID PLATFORM "LOXAM" | SIKKERHEDSFORANSTALTNING I LIFTKURV 'LOXAM" |
| MALE CONNECTION | KUPPLUNG MIT AUßENGEWINDE | INSTEEKVERBINDING | GEVIND |
| MALE UNION PIECE | ANSCHLUßSTÜCK MIT AUßENGEWINDE | INTREDENDE VERBINDING | SAMLING HAN |
| MANUAL | HANDBUCH | HANDBOEK | MANUAL |
| MANUAL EMERGENCY OPERATION | MANUELLE FEHLERBESEITIGUNG | HANDMATIG FOUTENHERSTEL | MANUEL REPARATION |
| MANUFACTURER'S PLATE | HERSTELLERSCHILD | CONSTRUCTIEPLAATJE | TYPESKILT |
| MINIMESS TAP | MINIMESS-ANSCHLUß | MINIMESS AANSLUITING | STIK |
| MODIFICATION | ÄNDERUNG | WIJZIGING | ÆNDRING |
| MOTOR | MOTOR | MOTOR | MOTOR |
| MOTOR AXLE COVER | ABDECKUNG ANTRIEBSACHSE | KAP OP AANDRIJFAS | SKÆRM PÅ DRIVAKSEL |
| MOTOR GUIDING AXLE | ANTRIEBSFÜHRUNGSACHSE | DRIJF/STUURAS | MOTORAKSEL |
| MOTOR OIL HEATER | MOTORÖLERHITZER | VOORVERWARMEN OLIE MOTOR | MOTOROLIEVARMER |

| English | Deutsch | Nederlands | Danska |
|---|---|---|---|
| MOTOR OIL REFRIGERANT | MOTORÖLKÜHLMITTEL | KOELVLOEISTOF MOTOROLIE | MOTOROLIEKØLER |
| MOTOR PARTITION | MOTORABTRENNUNG | SCHOT MOTOR | MOTORSKÆRM |
| MOTOR TANK BASE | BODEN MOTORRAUM | BODEM MOTORBAK | NEDERSTE DEL AF MOTORKASSE |
| MOUNTING FLANGE (MOTOR) | BEFESTIGUNGSSCHELLE MOTOR | MOTORKLEM | MONTERINGSFLANGE TIL MOTOR |
| NON MARKING TYRE | NICHT MARKIERENDE REIFEN | BAND "NO MARKING" | DÆK "INGEN MARKERING" |
| NOTCHED CONNECTION | RASTKUPPLUNG | GEKARTELDE VERBINDING | FORBINDELSESLED MED INDSNIT |
| NUT | MUTTER | MOER | MØTRIK |
| OIL FILTER SUPPORT | STÜTZE ÖLFILTER | STEUNSTUK OLIEFILTER | HOLDER OLIEFILTER |
| OIL FOR HOT COUNTRIES | ÖL WARME LÄNDER | OLIE WARME LANDEN | OLIE TIL VARME LANDE |
| ON/OFF MOVEMENTS BLOCK | BEWEGUNGSBLOCK ALLES-ODER-NICHTS-PRINZIP | BEWEGINGSBLOK ALLES-OF-NIETS | BEVÆGELSESBLOK ALT ELLER INTET |
| ONE-WAY DOUBLE VALVE | DOPPELTE RÜCKSCHLAGKLAPPE | DUBBELE ANTI-TERUGSLAG KLEP | DOBBELT VENTIL ANTI-KLAVITATION |
| ONE-WAY VALVE | RÜCKSCHLAGKLAPPE | TERUGSLAGKLEP | KONTRAVENTIL |
| OPERATOR'S MANUAL | BEDIENUNGS- UND WARTUNGSHANDBUCH | BESTURINGS- EN ONDERHOUDSINSTRUKTIES | EU-BETJENINGSVEJLEDNING |
| OPTION | OPTION | OPTIE | EKSTRAUDSTYR |
| ORGANIC OIL | BIOLOGISCHES ÖL | BIOLOGISCHE OLIE | BIOLOGISK OLIE |
| O-RING | O-RINGDICHTUNG | AFDICHTRING | O-RING |
| PACKING BOX | STOPFBÜCHSE | PAKKINGBUS | PAKDÅSE |
| PAD | UNTERLAGE | GLIJDER | KLODS |
| PAD UNDER MOTOR SUPPORT | KUFE UNTER MOTORHALTERUNG | GELEIDESLOF ONDER STEUN MOTOR | STØTTEUNDERSTEL TIL MOTOROPHÆNG |
| PEDAL | PEDAL | PEDAAL | PEDAL |
| PENDULAR | PENDELARM | SLINGER | UDLIGGER |
| PENDULAR CONNECTOR | PENDELNDES VERBINDUNGSTEIL | VERBINDINGSSTUK SLINGER | FORBINDELSESSTYKKE UDLIGGER |
| PENDULAR RAISING CYLINDER | PENDELARMANHUBZYLINDER | HEFCILINDER SLINGER | PENDULHÆVNINGSCYLINDER |
| PILOT-OPERATED CHECK VALVE | STEUERRÜCKSCHLAGKLAPPE | ANTI-TERUGSLAGSTUURKLEP | STYRENDE KONTRAVENTIL |
| PIN | ACHSE | AS | AKSEL |
| PIN COVER | ACHSKAPPE | ASKAP | HÆTTE TIL AKSEL |
| PIN STOP | ACHSENSPERRE | ASSTOP | AKSELSTOP |
| PIN STOP PLATE | SICHERUNG ACHSE | ASBORGPLAAT | PLADE AKSELSTOP |
| PIPE | ROHR | PIJP | RØR |
| PISTON | KOLBEN | ZUIGER | STEMPEL |
| PLASTIC SPIRAL HOSE | ELASTISCHE KUNSTSTOFFSPIRALE | KUNSTSTOF SPIRAALSLANG | FLEKSIBEL PLASTSPIRAL |
| PLATE | BLECH | PLAAT | PLADE |
| PLATFORM | PLATTFORM | PLATFORM | PLATFORM |
| PLATFORM + JIB | BÜHNE + PENDELARM | KORF + SLINGER | KURV + PENDELAKSEL |

| English | Deutsch | Nederlands | Danska |
|---|---|---|---|
| PLATFORM CABINET | SCHALTKASTEN BÜHNE | KAST GONDEL | EL-KASSE KURV |
| PLATFORM ELECTRICITY | STROM ARBEITSBÜHNE | ELEKTRICITEIT KORF | ELEKTRICITET LIFT/KURV |
| PLATFORM SUPPORT | PLATTFORMTRÄGER | STEUN PLATFORM | PLATFORMHOLDER |
| PLATFORM WITH WEIGHING-ROTATION | ARBEITSBÜHNE MIT WIEGE-DREHVORRICHTUNG | KORF MET WEGING-DRAAIING | LIFT/KURV MED VEJNING-ROTATION |
| PLUG | STECKER | FICHE | STIK |
| PLUG | STOPFEN | PLUG | STUDS |
| PLUG SEAL | STOPFENDICHTUNG | DOPDICHTING | STUDSPAKNING |
| PLUG SOCKET | ANSCHLUß | AANSLUITING | STIK |
| POINTER | LEISTE | RAIL | SKINNE |
| PORTUGAL LABELS | ETIKETTEN PORTUGAL | PORTUGESE OPSCHRIFTEN | ETIKETTER (PORTUGISISKE) |
| POSITION SWITCH | POSITIONSSCHALTER | POSITIESCHAKELAAR | STILLINGSKOBLER |
| PRESSURE CONTROLLER | KONTAKT DRUCKMESSER | HANDCONTACT | TRYKKOBLER |
| PRESSURE FILTER | DRUCKFILTER | DRUKFILTER | TRYKFILTER |
| PRESSURE LIMITER | DRUCKBEGRENZER | DRUKBEGRENZER | TRYKBEGRÆNSER |
| PRESSURISED LIQUID LABEL | ETIKETT "MEDIEN UNTER DRUCK" | OPSCHRIFT VLOEISTOF ONDER DRUK | ETIKET "VÆSKE UNDER TRYK" |
| PROFILED SECTION | PROFIL | PROFIEL | PROFILJERN |
| PROTECTIVE PLATE | SCHUTZPLATTE | BESCHERMINGSPLAAT | BESKYTTELSESPLADE |
| PROTECTIVE PLATE | SCHUTZBLECH | STAALPLAATBESCHERMING | BESKYTTELSESPLADE |
| RAIL BAR | SCHIENENLEISTE | RAILSTAAF | U-PROFIL |
| REAR HOOD | HINTER SCHUTZABDECKUNG | ACHTER KAP | BAGAN SKÆRM |
| RED ARROW | ROTER PFEIL | RODE PIJL | RØD PIL |
| REDUCER | GETRIEBE | VERTRAGER | REDUKTOR |
| REDUCER PACKING BOX | STOPFBÜCHSE GETRIEBE | PAKKINGSBUS REDUCTOR | PAKDÅSE REDUKTOR |
| REDUCTION | UNTERSETZUNG | VERTRAGING | REDUKTION |
| RETAINER | HALTESCHEIBE | BORGRING | FASTHOLDELSESSKIVE |
| RETAINING BRACKET | BEFESTIGUNGSEISEN | BEVESTIGINGSPOOT | FASTGØRELSESTAP |
| RFA LABELS | ETIKETTEN DEUTSCHLAND | DUITSE OPSCHRIFTEN | ETIKETTER (TYSKE) |
| RIGHT HOOD | RECHTE SCHUTZABDECKUNG | RECHTER KAP | HØJRE SKÆRM |
| RIGHT LINK | RECHTER SCHWINGARM | DRIJFSTANG RECHTS | LILLE FORBINDELSESSTANG HØJRE |
| RIGHT NUT | MUTTER RECHTS | MOER RECHTS | MØTRIK HØJRE |
| RIGHT WHEEL | RECHTES RAD | RECHTER WIEL | HØJRE HJUL |
| RIGHT-HAND STANDARD LUBRICATOR | RECHTE STANDARD-SCHMIERVORRICHTUNG | STANDAARD SMEERMIDDEL RECHTS | HØJRE STANDARDSMØRER |
| RIGID | ROHR | STIJF | UBØJELIG |
| RIM | FELGE | VELG | FÆLG |

| English | Deutsch | Nederlands | Danska |
|---|---|---|---|
| RING | KRANZ | KROON | KRAVE |
| RING | RING | RING | RING |
| RING | RING | RING | RING |
| ROD | STANGE | PEN | STANG |
| ROLLER | ROLLE | ROL | VALSE |
| ROLLER | ROLLE | WIELTJE | RULLE |
| ROTARY AXLE CONNECTOR PIECE | ROT-ACHSE VERBINDUNGSSTÜCK | DRAAIENDE AS VERBINDINGSSTUK | ROTERENDE AKSEL TIL FORBINDELSESDEL |
| ROTATING CROSSTAIL | UMGEKEHRTES DREH-T-STÜCK | DRAAIENDE OMGEKEERDE T | OMVENDT DREJENDE T-STYKKE |
| ROTATING EQUAL T-PIECE | GLEICHSEITIGES DREH-T-STÜCK | DRAAIENDE GELIJKE T | T-STYKKE MED DREJNING |
| ROTATION AXIS | DREHACHSE | DRAAIAS | ROTATIONSAKSEL |
| ROTATION DETECTOR PAD | KUFE DREHUNGSSONDE | SCHOEN SENSOR ROTATIE | FODSTYKKE PÅ ROTATIONSSENSOR |
| RUBBER WASHER | FLEXIBLE UNTERLEGSCHEIBE | ELASTISCHE RING | SIKRINGSSKIVE |
| SCREW | SCHRAUBE | SCHROEF | SKRUE |
| SEAL | VERSCHLUß | AFSLUITER | PAKNINGSVENTIL |
| SEAL | DICHTUNG | PAKKING | SAMLING |
| SELF-LOCKED NUT | SELBSTGESICHERTE MUTTER | ZELFREMMENDE MOER | MØTRIK MED AUTOMATISK STOP |
| SELF-STOPPING METAL NUT | SELBSTSTOPPENDE MUTTER METALL | ZELFREMMENDE METALEN MOER | SELVLÅSENDE MØTRIK |
| SEMI-FLANGE | HALBFLANSCH | HALVE FLENS | HALVFLANGE |
| SENSOR STOP | SICHERUNG SENSOR | STOP SENSOR | FØLERSTOP |
| SEPARATOR | TRENNELEMENT | AFSCHEIDER | SEPERATOR |
| SET SCREW | STELLSCHRAUBE | REGELSCHROEF | JUSTERINGSSKRUE |
| SHAFT PIN | ACHSENAUFHÄNGUNG | ASNAALD | AKSELPIND |
| SHEATH | HÜLLE | BUIS | KANAL |
| SIDE PAD SUPPORT | STÜTZE SEITENKUFE | STEUNSTUK ZIJSCHOEN | HOLDER TIL SIDESLIDESKO |
| SINGLE-POLE TOGGLE SWITCH | EINPOLIGER SCHALTER MIT HEBEL | ENKELPOLIGE SCHAKELAAR MET HENDEL | ENPOLET VIPPEAFBRYDER TIL |
| SLEW RING | DREHKRANZ | ORIËNTATIEKROON | RETNINGSREGULERINGSKRAVE |
| SLEWING ROD | AUSRICHTUNGSSPINDEL | ORIËNTATIEPEN | RETNINGSTAP |
| SLIDING BAR | SCHUTZGLEITSTANGE /-GELÄNDER | SCHUIFSTANG | GLIDESTANG |
| SLOTTED SCREW | SCHLITZSCHRAUBE | GESPLETEN SCHROEF | SKRUE MED KÆRV |
| SMOOTH MALE SLOT | GLATTER BÜGEL | GLADDE INTREDENDE BEUGEL | AFRETNING |
| SNIFFER | LÜFTUNGSVENTIL | ONTLUCHTER | LUFTVENTIL |
| SNIFFING VALVE AIR FILTER | ENTLÜFTER LUFTFILTER | SNUIFKLEP LUCHTFILTER | SNØFTEVENTIL LUFTFILTER |
| SNIFFING VALVE SUPPORT | ENTLÜFTERTRÄGER | STEUN SNUIFKLEP | HOLDER TIL SNØFTEVENTIL |
| SOCKET | ZEIGERBEFESTIGUNG | ENBUS | BØSNING |
| SPAIN LABELS | ETIKETTEN SPANIEN | SPAANSE OPSCHRIFTEN | ETIKETTER (SPANSKE) |

| English | Deutsch | Nederlands | Danska |
|---|---|---|---|
| SPARE PARTS CATALOGUE | ERSATZTEILKATALOG | CATALOGUS VERVANGONDERDELEN | RESERVEDELSKATALOG |
| SPOTLIGHT | SCHEINWERFER | PROJECTOR | PROJEKTØR |
| SPRING WASHER | FEDERSCHEIBE | VEERRING | FJEDERSKIVE |
| STARTER | ANLASSER | STARTER | STARTER |
| STARTER ALTERNATOR CABLING | VERKABELUNG VOM GENERATOR ZUM STARTER | KABELS VOOR WISSELSTROOMGENERATOR VAN | KABLER TIL STARTERENS GENERATOR |
| STARTING BATTERY | STARTBATTERIE | STARTACCU | STARTBATTERI |
| STEERING BAR | LEITSTANGE | STUURSTANG | STYRESTANG |
| STEERING CYLINDER | FÜHRUNGSZYLINDER | STUURCILINDER | KØRSELSCYLINDER |
| STEERING PIN SLOT | ACHSE LENKBÜGEL | AS STUURBEUGEL | KAPPEAKSEL TIL RETNINGSREGULERING |
| STEERING YOKE | LENKBÜGEL | BEUGEL VAN STUURINRICHTING | KAPPE TIL STYREMEKANISMEN |
| STOP | ANSCHLAG | AANSLAG | ENDESTOP |
| STOP PAD | ANSCHLAGDORN | BUFFER | STOPPEKLODS |
| STOP WASHER | SICHERUNGSSCHEIBE | BORGRING | KONTRASKIVE |
| STRENGTHENER | VERSTÄRKUNG | VERSTEVIGING | FORSTÆRKNING |
| STUD | STIFTBOLZEN | STIFT | STIFT |
| SUPPLY | STROMVERSORGUNG | VOEDING | STRØMFORSYNING |
| SUPPORT FLAT | TRÄGERFLÄCHE | STEUNPLAAT | FLAD HOLDER |
| SUPPORT WASHER | STÜTZSCHEIBE | KLEPVEERDEKSEL | FJEDERTALLERKEN |
| SWIVEL ARMS | SCHWENKARM | BEWEEGBARE ARMEN | LEDARME |
| TELESCOPE | TELESSKOP | TELESCOOP | TELESKOP |
| TELESCOPE REAR PAD | HINTERE TELESKOPKUFE | BLOK ACHTER TELESCOOP | BAGERSTE TELESKOPUNDERSTEL |
| TELESCOPIC ACTION JACK | AUSFAHRZYLINDER | INSCHUIFCILINDER | TELESKOPCYLINDER |
| TELESCOPIC BOOM | TELESKOPAUSLEGER | UITSCHUIFBARE GIEK | TELESKOPUDLIGGER |
| TERMINAL PARTITION BLOCK | BLOCK ENDWAND | BLOK EINDWAND | SLUTVÆGSBLOK |
| TERRESTRIAL INTERFACE BLOCK | BLOCK ERDANSCHLUSS | BLOK AARDVERBINDING | KLEMRÆKKE MED JORDFORBINDELSE |
| THERMAL MOTOR SUPPORT | VERBRENNUNGSMOTORTRÄGER | STEUN THERMISCHE MOTOR | BÆRESTYKKE TIL TERMISK MOTOR |
| THERMAL MOTOR UNIT + PUMP | THERMISCHES MOTORAGGREGAT + PUMPE | THERMISCHE MOTOR GROEP + POMP | VARMEKRAFTSMOTORAGREGAT + PUMPE |
| THERMAL SWITCH | THERMOSCHALTER | THERMOCONTACTSLUITER | TERMOKONTAKT |
| THIN NUT | UNTERE MUTTER | ONDERMOER | MØTRIK LAV |
| THREADED ROD | GEWINDESTANGE | SLANG | GEVINDTAP |
| THRUST COLLAR | ANSCHLAGRING | AANSLAGRING | STOPRING |
| THRUST WASHER | DRUCKSCHEIBE | AANSLAGRING DE | BRYSTRING |
| TIGHTENING COLLAR | KLEMMSCHELLE | KLEMRING | SPÆNDERING |
| TIGHTENING IRON | ANZIEHPLATTE | KLEMVLAK | SPÆNDFLADE |

| English | Deutsch | Nederlands | Danska |
|---|---|---|---|
| TIGHTENING PAD | KLEMMKUFE | KLEMSLOF | SPÆNDKLEMME |
| TILT DETECTOR | NEIGUNGSERFASSUNG | DETECTOR VAN OVERHELLING | HÆLDNINGSDETEKTOR |
| TILT DETECTOR CABLING | SCHRÄGVERKABELUNG | KABELS | HÆLDNINGSKABLER |
| TIRE | REIFEN | BAND | DÆK |
| TOOTH LOCK WASHER | ZAHNSCHEIBE | GETANDE RING | SPÆNDETANDSKIVE |
| TOP ARM | OBERER ARM | BOVENSTE ARM | ØVRE ARM |
| TOP COVER | OBERE ABDECKUNG | BOVENSTE KAP | ØVERSTE SKÆRM |
| TOP TIE ROD | OBERE ZUGSTANGE | BOVENSTE STANG | ØVRE TRÆKSTANG |
| TRAVEL BLOCK | GETRIEBEBLOCK | TRANSLATIEBLOK | TRANSLATIONSBLOK |
| TRAVEL REDUCER | FAHRWERKGETRIEBE | TRANSLATIEREDUCTOR | TRANSLATIONSREDUCKTOR |
| TRUNKING | RINNE | GOOTJE | SLISK |
| TURNTABLE BOX | AUFBAUKASTEN | KOFFER TOREN | SØJLESKAB |
| TURNTABLE ELECTRICITY | STROM AUFBAU | ELEKTRICITEIT TOREN | ELEKTRICITET TÅRN |
| TURRET | OBERWAGEN | TOREN | TÅRN |
| TURRET COWLING | ABDECKUNG AUFBAU | TORENKAPPEN | SKÆRM TIL TÅRN |
| TURRET FRAME | GESTELL AUFBAU | TORENCHASSIS | CHASSIS TIL TÅRN |
| TURRET HYDRAULIC INSTALLATION | HYDRAULIKANLAGE AUFBAU | HYDRAULISCHE UITRUSTING TOREN | HYDRAULISK INSTALLATION, TÅRN |
| TURRET/BOTTOM ARM PIN | ACHSE UNTERER ARM/AUFBAU | AS ONDERSTE ARM/TOREN | AKSEL TIL ARM/TÅRN |
| TURRET/BOTTOM ARM PIN | AUFBAU / ARME | TOREN / ARM | TÅRN / ARM |
| TURRET/BOTTOM TIE ROD PIN | ACHSE UNTERE ZUGSTANGE/AUFBAU | AS ONDERSTE STANG/TOREN | AKSEL TIL NEDRE TRÆKSTANG/TÅRN |
| UNION PIECE | ANSCHLUß | VERBINDING | SAMLING |
| UNION PIECE | GLEICHSEITIGES VERBINDUNGSSTÜCK | GELIJKE VERBINDING | LIGE SAMLING |
| UPPER PENDULAR ARM | OBERER PENDELARM | ARMEN HOOG PENDEL | ØVERSTE PENDULARM |
| VALVE | HAHN | AFSLUITER | HANE |
| VALVE | KLAPPE | KLEP | VENTILKLAP |
| WARRANTY ACTIVATION LABEL | GARANTIEAKTIVIERUNG | ACTIVEREN GARANTIE | IVÆRKSÆTTELSE AF GARANTI |
| WASHER | UNTERLEGSCHEIBE | RING | SKIVE |
| WEAR PAD | VERSCHLEIßUNTERLAGE | SLIJTAGEGLIJSCHOEN | SLIDSKO |
| WHEEL NUT | RADMUTTER | WIELMOER | HJULMØTRIK |
| WHEELS | RAD | WIEL | HJUL |
| WHITE DIESEL | WEIßES GASÖL | WITTE DIESEL | HVID DIESEL |
| WIDE BASKET | BREITER KORB | GROTE KORF | BRED KURV |
| WIRING HARNESS CABLING | STRAHLKABEL | BEDRADING BUNDEL | KABELNET |
| WOODRUFF KEY | PARALLELKEIL | VLAKKE SPIE | PARALLEL KILE |
| WORK HEADLIGHT | ARBEITSSCHEINWERFER | WERKLAMP | ARBEJDSPROJEKTØR |

| English | Deutsch | Nederlands | Danska |
|---|---|---|---|
| WORM AND TORQUE HUB | MOMENTNABE UND ENDLOSSCHRAUBE | KOPPELNAAF EN EINDLOZE SCHROEF | NAV, MOMENT OG ENDELØS SKRUE |
| WORM SCREW | ENDLOSSCHRAUBE | WORMSCHROEF | ENDELØS SKRUE |
| WORM WHEEL | SCHNECKENRAD | TANGENSWIEL | HJUL |
| YELLOW AND BLACK ADHESIVE MARKING | MARKIERKLEBESTREIFEN GELB UND SCHWARZ | AFBAKENING MET GEELZWARTE TAPE | KLÆBEMÆKATER |
| | | | |
| | | | |
| | | | |
| | | | |
| | | | |
| | | | |
| | | | |
| | | | |
| | | | |
| | | | |
| | | | |
| | | | |
| | | | |
| | | | |
| | | | |
| | | | |
| | | | |
| | | | |
| | | | |
| | | | |
| | | | |
| | | | |
| | | | |
| | | | |
| | | | |
| | | | |
| | | | |
| | | | |
| | | | |

| English | Español | Italiano | Português |
|---|---|---|---|
| « … REMOVE PIN » LABEL | "ETIQUETA "RETIRAR HUSILLO" | ETICHETTA "...TOGLIERE IL PUNZONE" | ETIQUETA "...RETIRAR PINO" |
| « 220 V SOCKET » LABEL | ETIQUETA "TOMA 220V" | ETICHETTA "PRESA 220 V" | ETIQUETA "TOMADA 220V" |
| « BODY CRUSHING » LABEL | ETIQUETA "APLASTAMIENTO CUERPO" | ETICHETTA "SCHIACCIAMENTO CORPO" | ETIQUETA "ESMAGAMENTO CORPO" |
| « BOTTOM PANEL » LABEL | "ETIQUETA "PUPITRE BAJO" | ETICHETTA "QUADRO (DI CO | ETIQUETA "PAINEL BAIXO" |
| « DIRECTION OF TRAVEL » LABEL | "ETIQUETA "SENTIDO TRANSLACIÓN" | ETICHETTA "SENSO TRASLAZIONE" | ETIQUETA "SENTIDO TRANSLAÇÃO" |
| « DO NOT INTERCHANGE » LABEL | "ETIQUETA "NO INTERCAMBIAR" | ETICHETTA "NON SCAMBIARE" | ETIQUETA "NÃO PERMUTAR" |
| « DO NOT PARK » PARK | "ETIQUETA "NO APARCAR" | ETICHETTA "NON SOSTARE" | ETIQUETA "NÃO ESTACIONAR" |
| « ELECTROCUTION » LABEL | ETIQUETA "ELECTROCUCIÓN" | ETICHETTA "ELETTROCUZION | ETIQUETA "ELECTROCUSSÃO" |
| « EMERGENCY » LABEL | "ETIQUETA "EMERGENCIA" | ETICHETTA "EMERGENZA" | ETIQUETA "EMERGÊNCIA" |
| « HAND CRUSHING » LABEL | "ETIQUETA "APLASTAMIENTO MANO" | ETICHETTA "SCHIACCIAMENTO MANI" | ETIQUETA "ESMAGAMENTO MÃO" |
| « HYDRAULIC OIL » LABEL | "ETIQUETA "ACEITE HIDRÁULICO" | ETICHETTA "OLIO IDRAULICO" | ETIQUETA "ÓLEO HIDRÁULICO" |
| « LUBRICATION » LABEL | "ETIQUETA "LUBRIFICACIÓN" | ETICHETTA "LUBRIFICAZION | ETIQUETA "LUBRIFICAÇÃO" |
| « OPERATING INSTRUCTIONS » LABEL | "ETIQUETA "CONSIGNAS UTILIZACIÓN" | ETICHETTA "ISTRUZIONI PER L'UTILIZZO" | ETIQUETA "INSTRUÇÕES DE UTILIZAÇÃO" |
| « TILT » LABEL | "ETIQUETA "INCLINACIÓN" | ETICHETTA "INCLINAZIONE" | ETIQUETA "INCLINAÇÃO TRANSVERSAL" |
| « WELDING EARTH » LABEL | ETIQUETA "MASA SOLDADURA" | ETICHETTA "MASSA SALDATU | ETIQUETA "MASSA SOLDADURA" |
| 1/2 PIVOTING AXIS | 1/2 EJE DE PIVOTE | 1/2 ASSE DI PERNO | SEMI-EIXO DE PIVOT |
| 240V SOCKET POSITION | "ETIQUETA "EMPLAZAMIENTO TOMA 240V" | ETICHETTA " POSIZIONE PRESA 240V" | ETIQUETA «LUGAR TOMADA 240V» |
| ACCELERATOR | ACELERADOR | ACCELERATORE | ACELERADOR |
| ACOUSTIC POWER | POTENCIA ACÚSTICA | POTENZA ACUSTICA | POTÊNCIA ACÚSTICA |
| ADAPTOR | ADAPTADOR | ADATTATORE | ADAPTADOR |
| ADAPTOR | ADAPTADOR | ADATTATORE | ADAPTADOR |
| ADDITIONAL COUNTERWEIGHT | CONTRAPESO ADICIONAL | CONTRAPPESO AGGIUNTIVO | CONTRAPESO ADICIONAL |
| ADJUSTABLE BEND | CODO ORIENTABLE | GOMITO ORIENTABILE | JOELHO ORIENTÁVEL |
| ADJUSTABLE BEND 135° JIC | CODO ORIENTABLE 135° JIC | GOMITO ORIENTABILE 135° JIC | JOELHO ORIENTÁVEL 135° JIC |
| ADJUSTING WASHER | ARANDELA DE AJUSTE | RONDELLA DI REGOLAZIONE | ANILHA DE AJUSTE |
| AIR FILTER CARTRIDGE | CARTUCHO FILTRO DE AIRE | CARTUCCIA FILTRO A ARIA | ELEMENTO DE FILTRO DE AR |
| ALTERNATOR | ALTERNADOR | ALTERNATORE | ALTERNADOR |
| ANGLE BRACKET | ESCUADRA DE FIJACIÓN | SQUADRA DI FISSAGGIO | ESQUADRO DE FIXAÇÃO |
| ARM HINGE PIN | EJE DE ARTICULACIÓN BRAZO | ASSE DI ARTICOLAZIONE BRACCIO | EIXO DE ARTICULAÇÃO BRAÇO |
| ARM LIFT CYLINDER | GATO ELEVACIÓN BRAZO | MARTINETTO SOLLEVAMENTO BRACCIO | CILINDRO DE ELEVAÇÃO BRAÇO |
| ATTACHMENT DEVICE | FIJACIÓN | FISSAGGIO | FIXAÇÃO |
| AUSTRALIA | AUSTRALIA | AUSTRALIA | AUSTRÁLIA |
| BAFFLE PLATE | DEFLECTOR | DEFLETTORE | DEFLECTOR |
| BAG OF SEALS | BOLSITA DE JUNTAS | BUSTINA DI GIUNTI | EMBALAGEM DE JUNTAS |
| BALANCE CARTRIDGE | CARTUCHO DE EQUILIBRADO | CARTUCCIA EQUILIBRAMENTO | CARTUCHO DE EQUILÍBRIO |

| English | Español | Italiano | Português |
|---|---|---|---|
| BALANCING VALVE | VÁLVULA DE EQUILIBRIO | VALVOLA DI EQUILIBRATURA | VÁLVULA DE EQUILÍBRIO |
| BALL | BOLA | SFERA | ESFERA |
| BALL BEARING | RODAMIENTO DE BOLAS | CUSCINETTO A SFERA | ROLAMENTO DE ESFERAS |
| BASE | ZÓCALO | ZOCCOLO | BASE |
| BATTERY | BATERÍA | BATTERIA | BATERIA |
| BATTERY SUPPORT | SOPORTE BATERÍA | SUPPORTO BATTERIA | SUPORTE BATERIA |
| BEACON | FARO GIRATORIO | SEGNALATORE LUMINOSO | FAROL GIRATÓRIO |
| BEARING PIN | EJE DE RODAMIENTO | ASSE DI SCORRIMENTO | EIXO DE ROLAMENTO |
| BELT COVER | CÁRTER DE CORREA | CARTER DELLA CINGHIA | CÁRTER DE CORREIA |
| BEND | CODO | GOMITO | JOELHO |
| BIODEGRADABLE OIL | ACEITE BIODEGRADABLE | OLIO BIODEGRADABILE | ÓLEO BIODEGRADÁVEL |
| BLOCK | CUERPO | CORPO | CORPO |
| BOLT | EJE DE ARTICULACIÓN | ASSE DI ARTICOLAZIONE | EIXO DE ARTICULAÇÃO |
| BOOM | FLECHA | FRECCIA | LANÇA |
| BOOM POST | CUERPO DE PLUMA | FUSTO DI FRECCIA | TAMBOR DE LANÇA |
| BOOM SUPPORT | SOPORTE DE PLUMA | SUPPORTO DEL 1° BRACCIO | SUPORTE DE LANÇA |
| BOTTOM ARM | BRAZO BAJO | BRACCIO BASSO | BRAÇO BAIXO |
| BOTTOM PART | PARTE BAJA | PARTE BASSA | PARTE BAIXA |
| BOTTOM PIVOTING AXIS | EJE DE PIVOTE INFERIOR | ASSE DI PERNO INFERIORE | EIXO DE PIVOT INFERIOR |
| BOTTOM TIE ROD | TIRANTE BAJO | TRAVE BASSA | TIRANTE BAIXO |
| BOX | CAJA | SCATOLA | CAIXA |
| BOX | CAJA | SCATOLA | CAIXA |
| BRACE | DISTANCIADOR | DISTANZIATORE | ESPAÇADOR |
| BRAID (NOT FELT) | CINTA SIN FIELTRO | GALLONE NON FELTRO | TRANÇA NÃO FELTRADA |
| BUNDLE | HAZ | FASCIO | FEIXE |
| CABLE | CABLE | CAVO | CABO |
| CABLE CLIP | ABRAZADERA DE FIJACIÓN | COLLARE DI FISSAGGIO | BRAÇADEIRA DE FIXAÇÃO |
| CABLE HOLDER CHAIN | CADENA PORTACABLE | CATENA PORTA-CAVO | CORRENTE PORTA-CABO |
| CABLES | CABLEADO | CABLAGGIO | CABLAGEM |
| CAGED NUT | TUERCA JAULA | BULLONE GABBIA | PORCA GAIOLA |
| CAP | CAPUCHÓN | CAPPUCCIO | TAMPÃO |
| CATALYTIC CONVERTER | TUBO DE ESCAPE CATALÍTICO | MARMITTA CATALITICA | CATALISADOR |
| CENTRE HINGE BOLT | EJE DE ARTICULACIÓN CENTRAL | ASSE ARTICOLAZIONE CENTRALE | EIXO ARTICULAÇÃO CENTRAL |
| CENTRE HOOD | CAPÓ CENTRAL | COFANO CENTRALE | CAPÔ CENTRAL |
| CENTRING STOP | TOPE CENTRADOR | FERMO CENTRATRICE | BATENTE CENTRADOR |

| English | Español | Italiano | Português |
|---|---|---|---|
| CHAIN (DOUBLE SERIES) | COLLAR SERIE DOBLE | COLLARE SERIE DOPPIA | ANEL SÉRIE DUPLA |
| CHAIN (STANDARD SERIES) | COLLAR SERIE ESTÁNDAR | COLLARE SERIE STANDARD | ANEL SÉRIE PADRÃO |
| CHASSIS HYDRAULICS | CONJUNTO HIDRÁULICO CHASIS | IDRAULICA TELAIO | HIDRÁULICA CHASSIS |
| CHOCK | CALCE | SPESSORE | CALÇO |
| CIRCUIT SELECTOR SWITCH | SELECTOR DE CIRCUITO | SELETTORE CIRCUITO | SELECTOR DE CIRCUITO |
| CLIP RECEPTACLE | RECEPTÁCULO A CLIPAR | BACINO DI RACCOLTA DA FISSARE CON CLIP | RECEPTÁCULO DE CLIPPER |
| CODED IGNITION MODULE | MÓDULO DE ARRANQUE CODIFICADO | MODULO DI AVVIAMENTO A C | MÓDULO DE ARRANQUE CODIFICADO |
| CODED IGNITION MODULE | MÓDULO DE ARRANQUE CODIFICADO | MODULO DI AVVIAMENTO A CODICE | MÓDULO DE ARRANQUE CODIFICADO |
| COIL | BOBINA | BOBINA | BOBINA |
| COLLAR | COLLAR | COLLARE | BRAÇADEIRA |
| COMMON EXCEPT USA / CANADA | COMÚN EXCEPTO EE.UU. / CANADÁ | COMUNE ECCETTO USA / CANADA | COMUM EXCEPTO EUA/CANADÁ |
| COMPENSATION INPUT CYLINDER | GATO RECEPTOR COMPENSACIÓN | MARTINETTO RICEVITORE COMPENSAZIONE | CILINDRO RECEPTOR DE COMPENSAÇÃO |
| COMPENSATION OUTPUT CYLINDER | GATO EMISOR DE COMPENSACIÓN | MARTINETTO EMITTENTE DI COMPENSAZIONE | CILINDRO EMISSOR DE COMPENSAÇÃO |
| COMPRESSION SPRING | RESORTE DE COMPRESIÓN | MOLLA DI COMPRESSIONE | MOLA DE COMPRESSÃO |
| COMPUTER | CALCULADOR | COMPUTER | CALCULADOR |
| CONICAL SPRING WASHER | | | |
| CONNECTING ROD | BIELA | BIELLA | BIELA |
| CONNECTING SOCKET | REDUCCIÓN M-H JIC | RIDUTTORE M/F JIC | REDUÇÃO M-F JIC |
| CONNECTING STRIP | REGLETA DE CONTACTOS | PONTICELLO DI COLLEGAMENTO | BARRA DE CONEXÃO |
| CONTACTOR | CONTACTOR | CONTATTORE | CONTACTOR |
| CONTROL PIN | EJE DE MANDO | ASSE COMANDO | EIXO DE COMANDO |
| CONTROL PLATFORM CONNECTOR | PIEZA DE UNIÓN PLATAFORMA PARA AJUSTE DEL PESAJE | PEZZO COLLEGAMENTO PIAT-COM. | PEÇA DE LIGAÇÃO PLAT-COM |
| CONTROL SUPPORT | SOPORTE DE MANDO | SUPPORTO DI COMANDO | SUPORTE DE COMANDO |
| COPPER SEAL | JUNTA COBRE | GIUNTO RAME | JUNTA DE COBRE |
| COUNTERWEIGHT | CONTRAPESO | CONTRAPPESO | CONTRAPESO |
| COUPLING | ACOPLADOR | GIUNTO | ACOPLADOR |
| COVER | TAPA | COPERCHIO | TAMPA |
| COVER HINGE | BISAGRA CAPÓ | CARDINE COFANO | CHARNEIRA DA CAPOT |
| COVER PLATE | PLACA DE CIERRE | PIASTRA DI CHIUSURA | PLACA DE FECHO |
| CYLINDER AXIS | EJE DE GATO | ASSE DI MARTINETTO | EIXO DE CILINDRO |
| CYLINDER FOOT PIN | EJE PIE DE GATO | ASSE PIEDE DI MARTINETTO | EIXO PÉ DE CILINDRO |
| CYLINDER NOSE-PIECE PIN | EJE EXTREMO DE GATO | ASSE TESTA DI MARTINETTO | EIXO NARIZ DE CILINDRO |
| CYLINDER ROD GUIDE | GUÍA DE VARILLA DE GATO | GUIDA DELL'ASTA DEL MARTINETTO | GUIA HASTE DE CILINDRO |

| English | Español | Italiano | Português |
|---|---|---|---|
| CYLINDRICAL STOP | TOPE CILÍNDRICO | FERMO CILINDRICO | BATENTE CILÍNDRICO |
| DENMARK LABELS | ETIQUETAS DINAMARCA | ETICHETTA DANIMARCA | ETIQUETAS DINAMARCA |
| DIFFERENTIAL CIRCUIT BREAKER | DISYUNTOR DIFERENCIAL | INTERRUTTORE DIFFERENZIALE | DISJUNTOR DIFERENCIAL |
| DIRECTION CENTRE PIN | EJE CENTRAL DE DIRECCIÓN | ASSE CENTRALE DI DIREZIONE | EIXO CENTRAL DE DIRECÇÃO |
| DIRECTION LEVER | PALANCA DE DIRECCIÓN | LEVA DI DIREZIONE | ALAVANCA DE DIRECÇÃO |
| DIRECTION PIVOT | PIVOTE DE DIRECCIÓN | PERNO DI DIREZIONE | CAVILHÃO DE DIRECÇÃO |
| DISK | DISCO | DISCO | DISCO |
| DISTRIBUTION BLOCK | BLOQUE DE DISTRIBUCIÓN | BLOCCO DI DISTRIBUZIONE | BLOCO DE DISTRIBUIÇÃO |
| DOCUMENT BOX | CAJA DE DOCUMENTOS | SCATOLA DOCUMENTI | CAIXA DE DOCUMENTOS |
| DOUBLE ROD | CAÑA DOBLE | CANNA DOPPIA | TUBO DUPLO |
| DRAINAGE PLUG | TAPÓN DE VACIADO | TAPPO DI SCARICO | BUJÃO DE ESVAZIAMENTO |
| DRIVING AXLE-(TREE) | EJE MOTOR | ASSE MOTORE | EIXO MOTOR |
| ELASTIC SHAFT RING | ANILLO ELÁSTICO EJE | ANELLO ELASTICO ALBERO | ANEL ELÁSTICO ÁRVORE |
| ELECTRIC CLOGGING INDICATOR | TESTIGO DE OBTURACIÓN ELÉCTRICO | SPIA DI COLMATURA ELETTRICA | INDICADOR DE COLMATAGEM ELÉCTRICO |
| ELECTRIC PUMP CONTACT SWITCH FITTING | MONTAJE DE CONTACTOR ELECTROBOMBA | MONTAGGIO CONTATTORE ELETTROPOMPA | MONTAGEM CONTACTOR ELECTRO-BOMBA |
| ELECTRICITY | ELECTRICIDAD | ELETTRICITA' | ELECTRICIDADE |
| ELECTROPUMP UNIT | GRUPO ELECTROBOMBA | GRUPPO ELETTROPOMPA | GRUPO ELECTRO-BOMBA |
| EMPTYING AND FILLING | VACIADO Y LLENADO | SVUOTAMENTO E RIEMPIMENTO | ESVAZIAMENTO E ENCHIMENTO |
| EQUAL T-PIECE | TE IGUAL | TE UGUALE | TÊ IGUAL |
| EQUAL T-PIECE JIC | TE IGUAL JIC | TE UGUALE JIC | TÊ IGUAL JIC |
| EVEN BEND | CODO IGUAL | GOMITO UGUALE | JOELHO IGUAL |
| EXTREMELY LOW-HEADED SCREW | TORNILLO CABEZA EXTREMADAMENTE BAJA | VITE TESTA ESTREM. BASSA | PARAFUSO DE CABEÇA EXTREMIDADE BAIXA |
| FINLAND LABELS | ETIQUETAS FINLANDIA | ETICHETTE FINLANDIA | ETIQUETAS FINLÂNDIA |
| FIXING COLLAR | ANILLO DE RETENCIÓN | ANELLO DI ARRESTO | CASQUILHO DE ESBARRO |
| FLANGE | BRIDA | FLANGIA | FLANGE |
| FLANGED BEARING BUSH | ANILLO CON COLLARÍN | ANELLOGUIDA | CASQUILHO COM REBORDO |
| FLAT WASHER | ARANDELA PLANA | RONDELLA PIATTA | ANILHA PLANA |
| FLEXIBLE | FLEXIBLE | FLESSIBILE | TUBO FLEXÍVEL |
| FLEXIBLE CHAIN SUPPORT | SOPORTE COLLARÍN FLEXIBLE | SUPPORTO COLLARE FLESSIBILE | SUPORTE ANEL FLEXÍVEL |
| FLEXIBLE COUPLINGS GUIDE STAR | ESTRELLA GUÍA FLEXIBLES | STELLA GUIDA FLESSIBILI | ESTRELA GUIA FLEXÍVEIS |
| FLEXIBLE GUIDE CHAIN | CADENA GUÍA FLEXIBLE | CATENA GUIDA FLESSIBILE | CORRENTE GUIA TUBO FLEXÍVEL |
| FLEXIBLE GUIDE SUPPORT | SOPORTE GUÍA FLEXIBLE | SUPPORTO GUIDA FLESSIBILE | SUPORTE GUIA TUBO FLEXÍVEL |
| FLEXIBLE PIN | PASADOR ELÁSTICO | COPPIGLIA ELASTICA | PERNO ELÁSTICO |
| FLEXIBLE SHEATH | VAINA FLEXIBLE | RIVESTIMENTO FLESSIBILE | GUIA DE CABO FLEXÍVEL |

| English | Español | Italiano | Português |
|---|---|---|---|
| FLOOR HEIGHT + LOAD LABEL | ETIQUETA ALTURA PISO + CARGA | ETICHETTA ALTEZZA PIANALE + CARICO | ETIQUETA ALTURA PAVIMENTO + CARREGADOR |
| FLOW DIVIDER | DIVISOR DE CAUDAL | DIVISIORE DI PORTATA | DIVISOR DE DÉBITO |
| FOAM FILLING | LLENADO ESPUMA | RIEMPIMENTO ESPANSO | ENCHIMENTO ESPUMA |
| FOAM FILLING | LLENADO ESPUMA | RIEMPIMENTO ESPANSO | ENCHIMENTO ESPUMA |
| FRAME COWLING | CAPOTAJE CHASIS | CAPOTTATURA TELAIO | INVÓLUCRO CHASSIS |
| FRANCE LABELS | ETIQUETAS FRANCIA | ETICHETTE FRANCIA | ETIQUETAS FRANÇA |
| FRONT HOOD | CAPÓ DELANTERO | COPERCHIO ANTERIORE | CAPÔ DIANTEIRO |
| FUEL TANK | DEPÓSITO DE CARBURANTE | SERBATOIO DI CARBURANTE | DEPÓSITO DE COMBUSTÍVEL |
| FUSE | FUSIBLE | FUSIBILE | FUSÍVEL |
| FUSE HOLDER | PORTAFUSIBLE | PORTAFUSIBILE | PORTA-FUSÍVEL |
| GANTRY DRILLING | TALADRADO CAJA | FORATURA ARMADIETTO | PERFURAÇÃO CAIXA |
| GAS SPRING | RESORTE DE GAS | MOLLA A GAS | MOLA DE GÁS |
| GAUGE | VARILLA INDICADORA | INDICATORE DI LIVELLO | CALIBRE |
| GB LABELS | ETIQUETAS GB | ETICHETTE REGNO UNITO | ETIQUETAS GB |
| GREEN ARROW | FLECHA VERDE | FRECCIA VERDE | LANÇA VERDE |
| GUIDE PAD | PATÍN DE GUÍA | PATTINO DI GUIDA | PATIM DE GUIA |
| GUIDE RING | ANILLO DE GUIADO | ANELLO GUIDA | CASQUILHO DE GUIA |
| HARNESS | ARNÉS | IMBRACATURE | ARNÊS |
| HEAD | CABEZA | TESTA | CABEÇA |
| HEAT CONTACT | TERMOCONTACTO | TERMO CONTATTO | TERMOCONTACTO |
| HEX CAP SCREW | TORNILLO DE EXTREMO CUBETA | VITE A ESTREMITÁ CONCAVA | |
| HIGH SPEED CUT-OFF | CORTE VELOCIDAD ALTA | INTERRUZIONE GRANDE VELOCITÀ | CORTE GRANDE VELOCIDADE |
| HINGE PIN | EJE ARTICULACIÓN | ASSE DI ARTICOLAZIONE | EIXO ARTICULAÇÃO |
| HOLDER | SOPORTE | SUPPORTO | SUPORTE |
| HOLLAND LABELS | ETIQUETAS HOLANDA | ETICHETTE OLANDA | ETIQUETAS HOLANDA |
| HOOD | CAPÓ | COPERCHIO | CAPÔ |
| HOOD STOP | TOPE DE TAPA | FERMO COPERCHIO | BATENTE DE CAPÔ |
| HOSE TIGHTENING IRON | PLATO DE APRIETE TUBO FLEXIBLE | PIATTO DI SERRAGGIO FLESSIBILE | PRATO DE APERTO TUBO FLEXÍVEL |
| HYDRAULIC DIAGRAM | ESQUEMA HIDRAULICO | SCHEMA IDRAULICO | ESQUEMA HIDRÁULICO |
| HYDRAULIC PARTITION | TABIQUE HIDRÁULICO | SEPARAZIONE IDRAULICA | DIVISÓRIA HIDRÁULICO |
| HYDRAULIC PUMP | BOMBA HIDRÁULICA | POMPA IDRAULICA | BOMBA HIDRÁULICA |
| HYDRAULIC RESERVOIR | DEPOSITO HIDRAULICO | SERBATOIO IDRAULICO | DEPÓSITO HIDRÁULICO |
| HYDRAULIC RESERVOIR KIT | KIT DEPÓSITO HIDRÁULICO | KIT SERBATOIO IDRAULICO | KIT DEPÓSITO HIDRÁULICO |
| INTERNAL COMBUSION ENGINE | MOTOR TÉRMICO | MOTORE TERMICO | MOTOR TÉRMICO |
| ITALY LABELS | ETIQUETAS ITALIA | ETICHETTE ITALIA | ETIQUETAS ITÁLIA |

| English | Español | Italiano | Português |
|---|---|---|---|
| JIB CYLINDER | GATO PENDULAR | MARTINETTO BRACCIO OSCILLANTE | MACACO PENDULAR |
| JIB RAISING JACK | GATO DE REPLEGADO FLECHA | MARTINETTO SOLLEVAMENTO FRECCIA | CILINDRO DE ELEVAÇÃO LANÇA |
| JIC NUT | TUERCA JIC | DADO JIC | PORCA JIC |
| JUNCTION | UNIÓN | UNIONE | JUNÇÃO |
| LABELS | ETIQUETAS | ETICHETTAS | ETIQUETAS |
| LABELS | ETIQUETAS | ETICHETTE | ETIQUETAS |
| LAMP | LÁMPARA | LAMPADA | LÂMPADA |
| LEFT HOOD | CAPÓ IZQUIERDO | COFANO SINISTRO | CAPÔ ESQUERDO |
| LEFT LINK | BIELITA IZQUIERDA | BIELLETTA SINISTRA | TIRANTE ESQUERDA |
| LEFT WHEEL | RUEDA IZQUIERDA | RUOTA SINISTRA | RODA ESQUERDA |
| LEVEL | NIVEL | LIVELLO | NÍVEL |
| LEVER | PALANCA | LEVA | ALAVANCA |
| LEVER-OPERATED SEALED LATCH | PESTILLO ESTANCO DE PALANCA | LEVETTA DI CHIUSURAERMETICA A LEVA | TRINCO ESTANQUE DE ALAVANCA |
| LINING HOLDER PLATE | BANDEJA PORTAGUARNICIÓN | PIATTO PORTAGUARNITURA | PRATO PORTA-EMPANQUE |
| LOAD ON ONE WHEEL | CARGA EN 1 RUEDA | CARICO SU 1 RUOTA | CARGA NUMA RODA |
| LOCK BOLT / PLUG SCREW | TAPÓN OPÉRCULO | TAPPO FORO | BUJÃO OPÉRCULO |
| LOCK NUT | TUERCA DE FRENO | DADO FRENO | PORCA TRAVÃO |
| LOCK NUT | CONTRATUERCA | CONTRODADO | CONTRA-PORCA |
| LOGO | GRAFISMO | GRAFICA | GRAFISMO |
| LOWER PART CHASSIS | CHASIS PARTE BAJA | TELAIO PARTE BASSA | CHASSIS PARTE INFERIOR |
| LOWER PENDULAR TIE ROD | TIRANTE INFERIOR PENDULAR | TIRANTE BASSO OSCILLANTE | TIRANTE INFERIOR PENDULAR |
| LOW-HEADED KNURLED SCREW | TORNILLO DE CABEZA MOLETEADA BAJA | VITE A TESTA ZINIGRATA BASSA | PARAFUSO DE ROSCA |
| LOXAM BASKET SAFETY SYSTEM | "SEGURIDAD CESTA "LOXAM" | SICUREZZA CESTELLO "LOXAM" | SEGURANÇA CESTO "LOXAM" |
| MALE CONNECTION | RACOR MACHO | RACCORDO MASCHIO | UNIÃO MACHO |
| MALE UNION PIECE | UNIÓNMACHO | UNIONE MASCHIO | UNIÃO MACHO |
| MANUAL | MANUAL | GUIDA | MANUAL |
| MANUAL EMERGENCY OPERATION | REPARACIÓN MANUAL | RIPARAZIONE MANUALE | REPARAÇÃO MANUAL |
| MANUFACTURER'S PLATE | PLACA CONSTRUCTOR | TARGA COSTRUTTORE | PLACA DO CONSTRUTOR |
| MINIMESS TAP | TOMA MINIMESS | PRESA MINIMESS | TOMADA MINIMESS |
| MODIFICATION | MODIFICACIÓN | MODIFICA | MODIFICAÇÃO |
| MOTOR | MOTOR | MOTORE | MOTOR |
| MOTOR AXLE COVER | CAPÓ SOBRE EJE MOTOR | COFANO SULL'ASSE MOTORE | CAPÔ EIXO MOTOR |
| MOTOR GUIDING AXLE | EJE MOTODIRECTOR | ASSE MOTORE-STERZANTE | EIXO MOTORIZADO DE DIRECÇÃO |
| MOTOR OIL HEATER | CALENTADOR ACEITE MOTOR | RISCALDATORE OLIO MOTORE | AQUECEDOR ÓLEO MOTOR |
| MOTOR OIL REFRIGERANT | REFRIGERANTE ACEITE MOTOR | REFRIGERANTE OLIO MOTORE | REFRIGERANTE DO ÓLEO DO MOTOR |

| English | Español | Italiano | Português |
|---|---|---|---|
| MOTOR PARTITION | TABIQUE MOTOR | SEPARAZIONE MOTORE | DIVISÓRIA MOTOR |
| MOTOR TANK BASE | FONDO CUBETA MOTOR | FONDO COMPARTO MOTORE | FUNDO COMPARTIMENTO MOTOR |
| MOUNTING FLANGE (MOTOR) | BRIDA DE FIJACIÓN MOTOR | FLANGIA FISSAGGIO MOTORE | PRESILHA DE FIXAÇÃO DO MOTOR |
| NON MARKING TYRE | "NEUMÁTICO "NO MARKING" | GOMMA "ANTI TRACCIA" | PNEU "NO MARKING" |
| NOTCHED CONNECTION | RACOR MUESCAS | RACCORDO A TACCHE | UNIÃO DENTADA |
| NUT | TUERCA | DADO | PORCA |
| OIL FILTER SUPPORT | SOPORTE FILTRO DE ACEITE | SUPPORTO FILTRO DELL'OLIO | SUPORTE FILTRO DE ÓLEO |
| OIL FOR HOT COUNTRIES | ACEITE PAÍSES CALIENTES | OLIO PAESI CALDI | ÓLEO PAÍSES QUENTES |
| ON/OFF MOVEMENTS BLOCK | BLOQUE MOVIMIENTOS TODO O NADA | BLOCCO MOVIMENTI TUTTO O NIENTE | BLOCO MOVIMENTOS TUDO OU NADA |
| ONE-WAY DOUBLE VALVE | MARIPOSA ANTIRRETROCESO DOBLE | VALVOLA ANTIRITORNO DOPPIA | VÁLVULA ANTI-RETORNO DUPLA |
| ONE-WAY VALVE | MARIPOSA ANTIRRETROCESO | VALVOLA ANTI-RITORNO | VÁLVULA ANTI-RETORNO |
| OPERATOR'S MANUAL | MANUAL DE OPERACIÓN Y MANTENIMIENTO | MANUALE DE GUIDA E MANUTENZIONE | MANUAL CE |
| OPTION | OPCIÓN | OPZIONE | OPÇÃO |
| ORGANIC OIL | ACEITE BIOLÓGICO | OLIO BIOLOGICO | ÓLEO BIOLÓGICO |
| O-RING | JUNTA TÓRICA | GIUNTO TORICO | JUNTA TÓRICA |
| PACKING BOX | PRENSAESTOPAS | PREMISTOPPA | EMPANQUE |
| PAD | PATÍN | PATTINO | PATIM |
| PAD UNDER MOTOR SUPPORT | PATÍN BAJO SOPORTE MOTOR | PATTINO SOTTO SUPPORTO M | SAPATA SOB SUPORTE MOTOR |
| PEDAL | PEDAL | PEDALE | PEDAL |
| PENDULAR | PENDULAR | PENDOLARE | PENDULAR |
| PENDULAR CONNECTOR | PIEZA DE UNIÓN PENDULAR | PEZZO DI COLLEGAMENTO BRACCIO OSCILL. | PEÇA DE LIGAÇÃO PENDULAR |
| PENDULAR RAISING CYLINDER | GATO DE REPLEGADO MOVIMIENTO PENDULAR | MARTINETTO DI SOLLEVAMEN | CILINDRO DE ELEVAÇÃO PENDULAR |
| PILOT-OPERATED CHECK VALVE | MARIPOSA ANTI-RETORNO PILOTO | VALVOLA ANTIRITORNO PILOTA | VÁLVULA ANTI-RETORNO PILOTADA |
| PIN | EJE | ASSE | EIXO |
| PIN COVER | HORQUILLA DE EJE | CAPPELLO DI ASSE | CHAPÉU DE EIXO |
| PIN STOP | PARADA DE EJE | ARRESTO DI ASSE | FREIO DA CAVILHA |
| PIN STOP PLATE | PLAQUETA PARADA DE EJE | PIASTRINA ARRESTO DI ASSE | PLACA DE RETENÇÃO DE EIXO |
| PIPE | TUBO | TUBO | TUBO |
| PISTON | PISTÓN | PISTONE | PISTÃO |
| PLASTIC SPIRAL HOSE | ESPIRAL PLÁSTICO FLEXIBLE | SPIRALE PLASTICA FLESSIBILE | ESPIRAL PLÁSTICO FLEXÍVEL |
| PLATE | CHAPA | LAMIERA | CHAPA |
| PLATFORM | PLATAFORMA | PIATTAFORMA | PLATAFORMA |
| PLATFORM + JIB | PLATAFORMA + PENDULAR | PIATTAFORMA + BRACCIO OSCILLANTE | PLATAFORMA + PENDULAR |
| PLATFORM CABINET | CAJA PLATAFORMA | COFANETTO PIATTAFORMA | CAIXA CESTA |

| English | Español | Italiano | Português |
|---|---|---|---|
| PLATFORM ELECTRICITY | ELECTRICIDAD BARQUILLA | ELETTRICITÀ PIATTAFORMA | ELECTRICIDADE PLATAFORMA |
| PLATFORM SUPPORT | SOPORTE PLATAFORMA | SUPPORTO PIATTAFORMA | SUPORTE PLATAFORMA |
| PLATFORM WITH WEIGHING-ROTATION | BARQUILLA CON PESAJE-ROTACIÓN | PIATTAFORMA CON PESAGGIO-ROTAZIONE | PLATAFORMA COM PESAGEM-ROTAÇÃO |
| PLUG | CLAVIJA | SPINA | FICHA |
| PLUG | TAPÓN | TAPPO | BUJÃO |
| PLUG SEAL | JUNTA DE TAPÓN | GUARNIZIONE DEL TAPPO | JUNTA DE BUJÃO |
| PLUG SOCKET | TOMA | PRESA | TOMADA |
| POINTER | REGLA | RIGHELLO | RÉGUA |
| PORTUGAL LABELS | ETIQUETAS PORTUGAL | ETICHETTE PORTOGALLO | ETIQUETAS PORTUGAL |
| POSITION SWITCH | INTERRUPTOR DE POSICIÓN | INTERRUTTORE DI POSIZIONE | INTERRUPTOR DE POSIÇÃO |
| PRESSURE CONTROLLER | MANOCONTACTO | CONTATTORE MANOMETRICO | MANOCONTACTO |
| PRESSURE FILTER | FILTRO PRESIÓN | FILTRO PRESSIONE | FILTRO PRESSÃO |
| PRESSURE LIMITER | LIMITADOR DE PRESIÓN | LIMITATORE DI PRESSIONE | LIMITADOR DE PRESSÃO |
| PRESSURISED LIQUID LABEL | ETIQUETA FLUIDO BAJO PRESIÓN | ETICHETTA FLUIDO SOTTO PRESSIONE | ETIQUETA FLUIDO SOB PRESSÃO |
| PROFILED SECTION | PERFIL | PROFILATO | PERFIL |
| PROTECTIVE PLATE | PLACA DE PROTECCIÓN | PIASTRA DI PROTEZIONE | PLACA DE PROTECÇÃO |
| PROTECTIVE PLATE | CHAPA DE PROTECCIÓN | LAMIERA DI PROTEZIONE | CHAPA DE PROTECÇÃO |
| RAIL BAR | ESPIGA CARRIL | BINARIO | FERRO PERFILADO |
| REAR HOOD | CAPÓ TRASERO | COPERCHIO POSTERIORE | CAPÔ TRASEIRO |
| RED ARROW | FLECHA ROJA | FRECCIA ROSSA | LANÇA VERMELHA |
| REDUCER | REDUCTOR | RIDUTTORE | REDUTOR |
| REDUCER PACKING BOX | PRENSAESTOPAS REDUCTOR | PREMISTOPPA RIDUTTORE | EMPANQUE REDUTOR |
| REDUCTION | REDUCCIÓN | RIDUZIONE | REDUÇÃO |
| RETAINER | ARANDELA DE RETENCIÓN | RONDELLA DI RITENUTA | ANILHA DE RETENÇÃO |
| RETAINING BRACKET | PATE DE FIJACIÓN | BRACCIO DI FISSAGGIO | PATILHA DE FIXAÇÃO |
| RFA LABELS | ETIQUETTES RFA | ETICHETTE GERMANIA | ETIQUETAS RFA |
| RIGHT HOOD | CAPÓ DERECHO | COFANO DESTRO | CAPÔ DIREITO |
| RIGHT LINK | BIELITA DERECHA | BIELLETTA DESTRA | TIRANTE DIREITA |
| RIGHT NUT | TUERCA A LA DERECHA | DADO A DESTRA | PORCA À DIREITA |
| RIGHT WHEEL | RUEDA DERECHA | RUOTA DESTRA | RODA DIREITA |
| RIGHT-HAND STANDARD LUBRICATOR | ENGRASADOR ESTÁNDAR DERECHO | INGRASSATORE STANDARD DIRITTO | LUBRIFICADOR PADRÃO DIREITO |
| RIGID | RÍGIDO | RIGIDO | RÍGIDO |
| RIM | LLANTA | CERCHIONE | JANTE |
| RING | CORONA | CORONA | COROA |
| RING | ANILLO | ANELLO | CASQUILHO |

| English | Español | Italiano | Português |
|---|---|---|---|
| RING | ANILLO | ANELLO | ANEL |
| ROD | VARILLA | ASTA | HASTE |
| ROLLER | RODILLO | RULLO | ROLO |
| ROLLER | RODILLO | RULLO | ROLETE |
| ROTARY AXLE CONNECTOR PIECE | EJE ROT. PIEZA UNIÓN | ASSE ROT. RACCORDO | EIXO ROT. PEÇA LIGAÇÃO |
| ROTATING CROSSTAIL | T GIRATORIA INVERTIDA | TE GIREVOLE ROVESCIATO | TÊ ROTATIVO INVERTIDO |
| ROTATING EQUAL T-PIECE | T IGUAL GIRATORIA | TE UNIFORME GIREVOLE | TÊ IGUAL ROTATIVO |
| ROTATION AXIS | EJE DE ROTACIÓN | ASSE DI ROTAZIONE | EIXO DE ROTAÇÃO |
| ROTATION DETECTOR PAD | PATÍN DETECTOR ROTACIÓN | PATINO SENSORE ROTAZIONE | SAPATA DETECTOR ROTAÇÃO |
| RUBBER WASHER | ARANDELA ELÁSTICA | RONDELLA ELASTICA | ANILHA ELÁSTICA |
| SCREW | TORNILLO | VITE | PARAFUSO |
| SEAL | OBTURADOR | OTTURATORE | OBTURADOR |
| SEAL | JUNTA | GIUNTO | JUNTA |
| SELF-LOCKED NUT | TUERCA DE AUTOFRENADO | DADO AUTOFRENATO | PORCA DE SEGURANÇA |
| SELF-STOPPING METAL NUT | TUERCA AUTOFRENADA METAL | DADO AUTOBLOCCATO METALLO | PORCA AUTOTRAVADA METAL |
| SEMI-FLANGE | MEDIA BRIDA | MEZZA FLANGIA | MEIA  PRESILHA |
| SENSOR STOP | PARADA CAPTADOR | ARRESTO SENSORE | PARAGEM SENSOR |
| SEPARATOR | SEPARADOR | SEPARATORE | SEPARADOR |
| SET SCREW | TORNILLO DE AJUSTE | VITE DI REGOLAZIONE | PARAFUSO DE AFINAÇÃO |
| SHAFT PIN | AGUJA DE EJE | PERNETTO D'ASSE | CAVILHA DE EIXO |
| SHEATH | CONDUCTO | RIVESTIMENTO | MANGA |
| SIDE PAD SUPPORT | SOPORTE PATÍN LATERAL | SUPPORTO PATTINO LATERALE | SUPORTE SAPATA LATERAL |
| SINGLE-POLE TOGGLE SWITCH | INTERRUPTOR UNIPOLAR DE PALANCA | INTERRUTTORE UNIPOLARE A LEVA | INTERRUPTOR UNIPOLAR DE ALAVANCA |
| SLEW RING | CORONA DE ORIENTACIÓN | CORONA DI ORIENTAZIONE | COROA DE ORIENTAÇÃO |
| SLEWING ROD | HUSILLO DE ORIENTACIÓN | PUNZONE DI ORIENTAZIONE | PINO DE ORIENTAÇÃO |
| SLIDING BAR | BARRA DESLIZANTE | SBARRA SCORREVOLE | BARRA ESCORREGADIÇA |
| SLOTTED SCREW | TORNILLO CABEZA REDONDA HENDIDA | VITE FUMISTA A INTAGLIO | |
| SMOOTH MALE SLOT | HORQUILLA MACHO LISA | FORCELLA MASCHIO LISCIA | FORQUILHA MACHO LISA |
| SNIFFER | RESPIRADERO | VALVOLA DI SPURGO | RESPIRADOURO |
| SNIFFING VALVE AIR FILTER | RESPIRADERO FILTRO DE AIRE | SFIATATOIO FILTRO ARIA | RESPIRADOURO FILTRO DE AR |
| SNIFFING VALVE SUPPORT | SOPORTE RESPIRADERO | SUPPORTO SFIATATOIO | SUPORTE RESPIRADOURO |
| SOCKET | CASQUILLO | MANICOTTI | CASQUILHO |
| SPAIN LABELS | ETIQUETAS ESPAÑA | ETICHETTE SPAGNA | ETIQUETAS ESPANHA |
| SPARE PARTS CATALOGUE | CATÁLOGO PR | CATALOGO PR | CATÁLOGO PEÇAS SOBRESSELENTES |
| SPOTLIGHT | PROYECTOR | PROIETTORE | FAROL |

| English | Español | Italiano | Português |
|---|---|---|---|
| SPRING WASHER | ARANDELA RESORTE | RONDELLA MOLLA | ANILHA DE MOLA |
| STARTER | ARRANCADOR | AVVIATORE | MOTOR DE ARRANQUE |
| STARTER ALTERNATOR CABLING | CABLEADO DEL ALTERNADOR AL MOTOR DE ARRANQUE | CABLAGGIO DALL'ALTERNATORE AL MOTORE DI AVVIAMENTO | CABLAGEM DO ALTERNADOR AO MOTOR DE ARRANQUE |
| STARTING BATTERY | BATERIA DE ARRANQUE | BATTERIA AVVIAMENTO | BATERIA DE ARRANQUE |
| STEERING BAR | BARRA DE DIRECCIÓN | BARRA DI DIREZIONE | BARRA DE DIRECÇÃO |
| STEERING CYLINDER | GATO DE DIRECCIÓN | MARTINETTO DI DIREZIONE | CILINDRO DE DIRECÇÃO |
| STEERING PIN SLOT | EJE HORQUILLA DIRECCIÓN | ASSE FORCELLA DIREZIONE | EIXO FORQUILHA DE DIRECÇÃO |
| STEERING YOKE | HORQUILLA DE DIRECCIÓN | COPERCHIO DI DIREZIONE | FORQUILHA DE DIRECÇÃO |
| STOP | TOPE | ARRESTO | BATENTE |
| STOP PAD | TOPE AMORTIGUADOR | TAMPONE | TAMPA BATENTE |
| STOP WASHER | ARANDELA DE PARADA | RONDELLA DI ARRESTO | ANILHA DE FREIO |
| STRENGTHENER | REFUERZO | RINFORZO | REFORÇO |
| STUD | ESPIGA | CAVICCHIO | PERNO |
| SUPPLY | ALIMENTACIÓN | ALIMENTAZIONE | ALIMENTAÇÃO |
| SUPPORT FLAT | PLACA SOPORTE | PIATTO SUPPORTO | TRAVESSA SUPORTE |
| SUPPORT WASHER | ARANDELA DE APOYO | RONDELLA D'APPOGGIO | ANEL DE APOIO |
| SWIVEL ARMS | BRAZOS ARTICULADOS | BRACCI ARTICOLATI | BRAÇOS ARTICULADOS |
| TELESCOPE | TELESCOPIO | BRACCIO TELESCOPICO | TELESCÓPIO |
| TELESCOPE REAR PAD | PATÍN POSTERIOR TELESCOPIO | PATTINO POSTERIORE SISTEMA TELESCOPICO | SAPATA TRASEIRA TELESCÓPIO |
| TELESCOPIC ACTION JACK | GATO DE MOVIMIENTO TELESCÓPICO | MARTINETTO DI TAMPONAMENTO | CILINDRO DE TELESCOPAGEM |
| TELESCOPIC BOOM | PLUMA TELESCÓPICA | FRECCIA TELESCOPICA | LANÇA TELESCÓPICA |
| TERMINAL PARTITION BLOCK | BLOQUE PARED TERMINAL | BLOCCO TRAMEZZO TERMINALE | BLOCO PAREDE TERMINAL |
| TERRESTRIAL INTERFACE BLOCK | BLOQUE EMPALME DE TIERRA | BLOCCO GIUNZIONE DI TERRA | BLOCO DE JUNÇÃO DE TERRA |
| THERMAL MOTOR SUPPORT | SOPORTE MOTOR TÉRMICO | SUPPORTO MOTORE TERMICO | SUPORTE MOTOR TÉRMICO |
| THERMAL MOTOR UNIT + PUMP | GRUPO MOTOR TÉRMICO + BOMBA | GRUPPO MOTORE TERMICO + POMPA | GRUPO MOTOR TÉRMICO+BOMBA |
| THERMAL SWITCH | TERMOCONTACTOR | TERMOCONTATTORE | TERMO-INTERRUPTOR |
| THIN NUT | TUERCA INFERIOR | DADO BASSO | PORCA BAIXA |
| THREADED ROD | VARILLA ROSCADA | ASTA FILETTATA | HASTE ROSCADA |
| THRUST COLLAR | ANILLO DE TOPE | ANELLO DI ARRESTO | CASQUILHO DE ENCOSTO |
| THRUST WASHER | ARANDELA DE TOPE | RONDELLA DI FERMO | ANILHA DE BATENTE |
| TIGHTENING COLLAR | ABRAZADERA APRIETE | COLLARE DI SERRAGGIO | BRAÇADEIRA DE APERTO |
| TIGHTENING IRON | PLATO DE APRIETE | PIATTO DI SERRAGGIO | PRATO DE APERTO |
| TIGHTENING PAD | PATÍN DE APRIETE | PATTINO DI SERRAGGIO | SAPATA DE APERTO |
| TILT DETECTOR | DETECTOR DE INCLINACIÓN | RIVELATORE DI INCLINAZIONE | DETECTOR DE INCLINAÇÃO TRANSVERSAL |

| English | Español | Italiano | Português |
|---|---|---|---|
| TILT DETECTOR CABLING | CABLEADO DE PENDIENTE | CABLAGGIO INCLINAZIONE | CABLAGEM DECLIVE |
| TIRE | NEUMÁTICO | PNEUMATICO | PNEU |
| TOOTH LOCK WASHER | ARANDELA DE DIENTES | RONDELLA A DENTE | ANILHA DE DENTES |
| TOP ARM | BRAZO ALTO | BRACCIO ALTO | BRAÇO ALTO |
| TOP COVER | CAPÓ SUPERIOR | COFANO SUPERIORE | CAPÔ SUPERIOR |
| TOP TIE ROD | TIRANTE ALTO | TRAVE ALTA | TIRANTE ALTO |
| TRAVEL BLOCK | BLOQUE TRANSLACIÓN | BLOCCO TRASLAZIONE | BLOCO DE TRANSLAÇÃO |
| TRAVEL REDUCER | REDUCTOR DE TRANSLACIÓN | RIDUTTORE DI TRASLAZIONE | REDUTOR DE TRANSLAÇÃO |
| TRUNKING | CONDUCTO | BOCCHETTONE | CALHA |
| TURNTABLE BOX | CAJA TORRETA | SCATOLA TORRETTA | CAIXA TORRE |
| TURNTABLE ELECTRICITY | ELECTRICIDAD TORRETA | ELETTRICITÀ TORRETTA | ELECTRICIDADE TORRE |
| TURRET | TORRETA | TORRETA | TORRE |
| TURRET COWLING | CAPOTAJE TORRETA | TETTUCCIO TORRETTA | INVÓLUCRO TORRE |
| TURRET FRAME | CHASIS TORRETA | TELAIO TORRETTA | CHASSIS TORRE |
| TURRET HYDRAULIC INSTALLATION | INSTALACIÓN HIDRÁULICA TORRETA | IMPIANTO IDRAULICO TORRETTA | INSTALAÇÃO HIDRÁULICA TORRE |
| TURRET/BOTTOM ARM PIN | EJE BRAZO BAJO / TORRETA | ASSE BRACCIO BASSO/TORRETTA | EIXO BRAÇO BAIXO/TORRE |
| TURRET/BOTTOM ARM PIN | TORRETA / BRAZO | TORRETTA / BRACCIO | TORRE / BRAÇO |
| TURRET/BOTTOM TIE ROD PIN | EJE TIRANTE BAJO / TORRETA | ASSE TRAVE BASSA/TORRETTA | EIXO TIRANTE BAIXO/TORRE |
| UNION PIECE | UNIÓN | UNIONE | UNIÃO |
| UNION PIECE | UNIÓN IGUAL | UNIONE UGUALE | UNIÃO EM TÊ |
| UPPER PENDULAR ARM | BRAZO SUPERIOR PENDULAR | BRACCIO OSCILLANTE ALTO | BRAÇO SUPERIOR PENDULAR |
| VALVE | GRIFO | RUBINETTO | TORNEIRA |
| VALVE | CHAPALETA | VALVOLA | VÁLVULA |
| WARRANTY ACTIVATION LABEL | "ETIQUETA "ACTIVACIÓN GARANTÍA" | ETICHETTA " INIZIO GARANZIA " | ETIQUETA «ACCIONAMENTO GARANTIDO» |
| WASHER | ARANDELA | RONDELLA | ANILHA |
| WEAR PAD | PATÍN DE DESGASTE | PATTINO DI USURA | PATIM DE DESGASTE |
| WHEEL NUT | TUERCA DE RUEDA | DADO DI RUOTA | PORCA DE RODA |
| WHEELS | RUEDAS | RUOTAS | RODAS |
| WHITE DIESEL | GASÓLEO BLANCO | GASOLIO BIANCO | GASÓLEO BRANCO |
| WIDE BASKET | CESTO ANCHO | CESTELLO LARGO | CESTO LARGO |
| WIRING HARNESS CABLING | CABLEADO HAZ | CABLAGGIO FASCIO | CABLAGEM DO FEIXE |
| WOODRUFF KEY | CHAVETA PARAL. | CHIAVETTA PARALL. | CHAVETA PARALELA |
| WORK HEADLIGHT | FARO DE TRABAJO | FARO DI LAVORO | FAROL DE TRABALHO |
| WORM AND TORQUE HUB | CUBO DEL PAR Y TORNILLO SIN FIN | MOZZO COPIA E VITE SENZA | CUBO GRUPO E PARAFUSO SEM FIM |
| WORM SCREW | TORNILLO SIN FIN | VITE SENZA FINE | PARAFUSO SEM FIM |

| English | Español | Italiano | Português |
|---|---|---|---|
| WORM WHEEL | RUEDA TANGENTE | RUOTA TANGENTE | RODA TANGENTE |
| YELLOW AND BLACK ADHESIVE MARKING | MARCADO ADHESIVO AMARILLO Y NEGRO | MARCATURA ADESIVO GIALLO E NERO | MARCAÇÃO ADESIVA AMARELA E PRETA |
| | | | |
| | | | |
| | | | |
| | | | |
| | | | |
| | | | |
| | | | |
| | | | |
| | | | |
| | | | |
| | | | |
| | | | |
| | | | |
| | | | |
| | | | |
| | | | |
| | | | |
| | | | |
| | | | |
| | | | |
| | | | |
| | | | |
| | | | |
| | | | |
| | | | |
| | | | |
| | | | |
| | | | |
| | | | |
| | | | |
| | | | |
| | | | |
| | | | |

| English | Svenska | Suomi | Românà |
|---|---|---|---|
| « … REMOVE PIN » LABEL | ETIKETT "TA BORT SPINDEL" | ETIKETTI "...KARAN POISTO" | ETICHETA "…A SCOATE BROSA" |
| « 220 V SOCKET » LABEL | ETIKETT "220V UTTAG" | ETIKETTI "PISTOKE 220V" | ETICHETA "PRIZA 220V" |
| « BODY CRUSHING » LABEL | ETIKETT "SÖNDERKLÄMNING AV KROPPEN" | ETIKETTI "VARTALO VOI JÄÄDÄ PURISTUKSIIN" | ETICHETA "PERICOL DE RANIRE CORP" |
| « BOTTOM PANEL » LABEL | ETIKETT "MANÖVERPANEL NERE" | ETIKETTI "ALAKONSOLI" | ETICHETA "PUPITRU DE JOS" |
| « DIRECTION OF TRAVEL » LABEL | ETIKETT "KÖRRIKTNING" | ETIKETTI "KULJETUKSEN SUUNTA" | ETICHETA "SENS TRANSLATIE" |
| « DO NOT INTERCHANGE » LABEL | ETIKETT "BYT INTE UT" | ETIKETTI "ÄLÄ VAIHDA KESKENÄÄN" | ETICHETA "A NU SE INTERSCHIMBA" |
| « DO NOT PARK » PARK | ETIKETT "PARKERING FÖRBJUDEN" | ETIKETTI "ÄLÄ PYSÄKÖI" | ETICHETA "A NU STATIONA" |
| « ELECTROCUTION » LABEL | ETIKETT "ELSTÖT" | ETIKETTI "SÄHKÖISKUVAARA" | ETICHETA "PERICOL DE ELECTROCUTARE" |
| « EMERGENCY » LABEL | ETIKETT "NÖDFALL" | ETIKETTI "HÄTÄTAPAUS" | ETICHETA "URGENTA" |
| « HAND CRUSHING » LABEL | ETIKETT "SÖNDERKLÄMNING AV HAND" | ETIKETTI "KÄSI VOI JÄÄDÄ PURISTUKSIIN" | ETICHETA "PERICOL DE RANIRE LA MANA" |
| « HYDRAULIC OIL » LABEL | ETIKETT "HYDRAULOLJA" | ETIKETTI "HYDRAULIIKKAÖLJY" | ETICHETA "ULEI HIDRAULIC" |
| « LUBRICATION » LABEL | ETIKETT "SMÖRJNING" | ETIKETTI "VOITELU" | ETICHETA "GRESAJ" |
| « OPERATING INSTRUCTIONS » LABEL | ETIKETT "INSTRUKTIONER FÖR ANVÄNDNING" | ETIKETTI "KÄYTTÖOHJEET" | ETICHETA "DISPOZITII DE FOLOSIRE" |
| « TILT » LABEL | ETIKETT "LUTNING" | ETIKETTI "KALTEVUUS" | ETICHETA "INCLINARE" |
| « WELDING EARTH » LABEL | ETIKETT "SVETSNINGSJORD" | ETIKETTI "MAADOITUS (HITSAUS)" | ETICHETA "MASA SUDURA" |
| 1/2 PIVOTING AXIS | HALV SPINDELBULT | AKSELITAPIN PUOLIAKSELI | SEMI-AX DE PIVOT |
| 240V SOCKET POSITION | DEKAL "PLACERING AV 240V-UTTAG" | TARRA "240V:N PISTOKKEEN SIJAINTI" | ETICHETA "AMPLASARE PRIZA 240 V" |
| ACCELERATOR | GASPEDAL | KIIHDYTIN | ACCELERATOR |
| ACOUSTIC POWER | LJUDEFFEKT | ÄÄNENVOIMAKKUUS | PUTERE ACUSTICA |
| ADAPTOR | ADAPTER | NAARASADAPTERI | ADAPTOR |
| ADAPTOR | ADAPTER | ADAPTERI | ADAPTOR |
| ADDITIONAL COUNTERWEIGHT | TILLÄGGSMOTVIKT | LISÄ VASTAPAINO | CONTRA-GREUTATE ADITIONALA |
| ADJUSTABLE BEND | INSTÄLLBART KNÄRÖR | KÄÄNTYVÄ TAIVE | COT ORIENTABIL |
| ADJUSTABLE BEND 135° JIC | INSTÄLLBART KNÄRÖR 135° JIC | KÄÄNTYVÄ TAIVE 135° JIC | |

| English | Svenska | Suomi | Românà |
|---|---|---|---|
| ADJUSTING WASHER | JUSTERBRICKA | SAATOLAATTA | SAIBA DE REGLARE |
| AIR FILTER CARTRIDGE | LUFTFILTERINSATS | ILMANSUODATINKASETTI | CARTUS FILTRU AER |
| ALTERNATOR | VÄXELSTRÖMSGENERATOR | VAIHTOVIRTAGENERAATTORI | ALTERNATOR GENERATOR |
| ANGLE BRACKET | HÖRNJÄRN | KULMATUKI | ECHER DE FIXARE |
| ARM HINGE PIN | AXEL FÖR ARMLAGRING | PUOMIN LIITOSAKSELI | AX ARTICULATIE BRAT |
| ARM LIFT CYLINDER | DOMKRAFT FÖR ARMLYFTNING | PUOMIN NOSTOSYLINTERI | CRIC DE RIDICARE BRAT |
| ATTACHMENT DEVICE | FASTSÄTTNING | KIINNITYS | FIXARE |
| AUSTRALIA | AUSTRALIEN | AUSTRALIA | AUSTRALIA |
| BAFFLE PLATE | UTBLÅSNINGSHUV | HEIJASTIN | DEFLECTOR |
| BAG OF SEALS | PÅSE MED PACKNINGAR | TIIVISTEKOTELO | LOCAS DE GARNITURI |
| BALANCE CARTRIDGE | BALANSELEMENT | TASAPAINOTUSKASETTI | CARTUS DE ECHILIBRARE |
| BALANCING VALVE | BALANSVENTIL | TASAPAINOTUSVENTTIILI | VALVA DE ECHILIBRARE |
| BALL | KULA | KUULA | BILA, TRAVERSA |
| BALL BEARING | KULLAGER | KUULATELA | RULMENTCU BILE |
| BASE | SOCKEL | PISTORASIA | SOCLU |
| BATTERY | BATTERI | SUOJUKSEN KIINNITYSRIPA | BATERIE |
| BATTERY SUPPORT | BATTERIETS HÄLLARE | AKKUTUKI | SUPORT BATERIE |
| BEACON | ROTATIONSLJUS | PYÖRIVÄ VALONHEITIN | GIROFAR |
| BEARING PIN | RULLAXEL | LAAKERIAKSELI | AX DE RULMENT |
| BELT COVER | REMHUS | HIHNAKOTELO | CARTER CUREA |
| BEND | KNÄRÖR | TAIVE | COT |
| BIODEGRADABLE OIL | BIOLOGISKT NEDBRYTBAR OLJA | BIOLOGISESTI HAJOAVA ÖLJY | ULEI BIODEGRADABIL |
| BLOCK | HUS | RUNKO | CORP |
| BOLT | LEDBULT | LIITOSAKSELI | AX ARTICULATIE |
| BOOM | KRANARM | NOSTURIN PUOMI | SAGEATA(BRAT) |
| BOOM POST | TORN PÅ KRANARM | NOSTURIN PUOMIN TUKIRUNKO | BUTOI, RECIPIENT DE BRAT |
| BOOM SUPPORT | KRANARMSFÄSTE | NOSTURIN PUOMIN TUKI | SUPORT DE BRAT |
| BOTTOM ARM | LÅG ARM | ALAPUOMI | BRAT JOS |
| BOTTOM PART | NEDRE DEL | ALAOSA | PARTEA DE JOS |
| BOTTOM PIVOTING AXIS | UNDRE BULT | ALA-AKSELITAPPI | AX DE PIVOT INFERIOR |
| BOTTOM TIE ROD | UNDRE DRAGBULT | ALAVETOTANKO | TIRANT JOS |
| BOX | DOSA | KOTELO | CUTIE |
| BOX | LÅDA | ASIA | CARCASA CUTIE |
| BRACE | MELLANLÄGG | VÄLITUKI | ANTRETUAZA |

| English | Svenska | Suomi | Românà |
|---|---|---|---|
| BRAID (NOT FELT) | KANTBAND UTAN FILTTYG | HUOVITTAMATON REUNUS | GALON NEINTARIT (FARA PASLA) |
| BUNDLE | KABELHÄRVA | KEILA | FASCICUL |
| CABLE | KABEL | VAIJERI | CABLU |
| CABLE CLIP | FASTSÄTTNINGSKLÄMMA | LETKUNKIINNITIN | COLIER DE FIXARE |
| CABLE HOLDER CHAIN | KABELHÅLLARE | VAIJERINPIDIKEKETJU | LANT PORT-CABLU |
| CABLES | KABELFÖRING | KYTKENTÄ | CABLARE |
| CAGED NUT | KORGMUTTER | HÄKIN LUKKO | |
| CAP | KÄPA | SUOJUS | CAPAC |
| CATALYTIC CONVERTER | KATALYSATOR | KATALYSAATTORIPUTKI | VAS CATALITIC |
| CENTRE HINGE BOLT | LEDBULT I MITTEN | KESKILIITOSAKSELI | AX ARTICULATIE CENTRALA |
| CENTRE HOOD | MITTHUV | KESKIKANSI | CAPOTA CENTRALA |
| CENTRING STOP | CENTRERINGSANSLAG | KESKIRAJOITIN | PIEDICA CENTRARE |
| CHAIN (DOUBLE SERIES) | DUBBEL KLINGFLÄNS | KAKSOISARJAKAULUS | |
| CHAIN (STANDARD SERIES) | STANDARD KLINGFLÄNS | VAKIOSARJAKAULUS | |
| CHASSIS HYDRAULICS | CHASSIHYDRAULIK | ALUSTAN HYDRAULIIKKA | HIDRAULICA SASIULUI CINTAR |
| CHOCK | KIL | KIILA | CALA |
| CIRCUIT SELECTOR SWITCH | KRETSVÄLJARE | VIRTAPIIRIVALITSIN | SELECTOR DE CIRCUIT |
| CLIP RECEPTACLE | BEHÅLLARE SOM SKALL KLÄMMAS FAST | LEIKKURILLA VARUSTETTU ASTIA | LACAS CU CLIPS |
| CODED IGNITION MODULE | KODAD STARTMODUL | MODUULI KOODATTU KÄYNNISTYS | MODUL DE DEMARARE CODATA |
| CODED IGNITION MODULE | KODAD STARTMODUL | MODUULI KOODATTU KÄYNNISTYS | MODUL DE DEMARARE CODATA |
| COIL | SPOLE | KELA | BOBINA |
| COLLAR | KLAMMA | KIINNITIN | BANDA BRATARA COLIER |
| COMMON EXCEPT USA / CANADA | GEMENSAM UTOM USA / CANADA | ALHAINEN BARRIKADI USA KANADA | |
| COMPENSATION INPUT CYLINDER | DOMKRAFT FÖR UTJÄMNINGSMOTTAGARE | KOMPENSOIVA VASTAANOTTOSYLINTERI | CRIC RECEPTOR DE COMPENSARE |
| COMPENSATION OUTPUT CYLINDER | DOMKRAFT FÖR UTJÄMNINGSSÄNDARE | KOMPENSOIVA LÄHETINSYLINTERI | CRIC EMITATOR DE COMPENSARE |
| COMPRESSION SPRING | TRYCKFJÄDER | PURISTUSJOUSI | ARC DE COMPRESIE |
| COMPUTER | STYRBOX | LASKIN | |
| CONICAL SPRING WASHER | | | |
| CONNECTING ROD | LÄNK | KIERTOKANKI | |

| English | Svenska | Suomi | Românà |
|---|---|---|---|
| CONNECTING SOCKET | REDUCERING M-F JIC | M-J JIC-ALENNUS | |
| CONNECTING STRIP | ANSLUTNINGSPLINT | LIITOSTANKO | CONEXIUNE TUB STABILIZATOR |
| CONTACTOR | KONTAKTOR | KYTKIN | CONTACTOR |
| CONTROL PIN | STYRAXEL | OHJAUSAKSELI | AX DE COMANDA |
| CONTROL PLATFORM CONNECTOR | SKARVDEL PLAT-KOM. | LIITOSKAPPALE | |
| CONTROL SUPPORT | FÄSTE FÖR REGLAGE | KÄSKYTUKI | SUPORT DE COMANDA |
| COPPER SEAL | KOPPARPACKNING | KUPARITIIVISTE | GARNITURA CUPRU |
| COUNTERWEIGHT | MOTVIKT | VASTAPAINO | CONTRA-GREUTATE |
| COUPLING | KOPPLINGSANORDNING | LIITÄNTÄ | CUPLA |
| COVER | LOCK | KANSI | CAPAC |
| COVER HINGE | GÅNGJÄRN TILL KÅPA | KANNEN SARANA | |
| COVER PLATE | TÄCKPLÅT | SULKULAATTA | PLACA DE INCHIDERE |
| CYLINDER AXIS | DOMKRAFTSAXEL | SYLINTERIAKSELI | AX DE CRIC |
| CYLINDER FOOT PIN | AXEL FÖR DOMKRAFTSFOT | SYLINTERIN JALUSTA-AKSELI | AX PICIOR DE CRIC |
| CYLINDER NOSE-PIECE PIN | AXEL FÖR DOMKRAFTSNOS | SYLINTERIN NOKKA-AKSELI | AX VARF DE CRIC |
| CYLINDER ROD GUIDE | STYRNING FÖR DOMKRAFTSSTÅNG | SYLINTERIN VARREN OHJAIN | GHID TIJA DE CRIC |
| CYLINDRICAL STOP | CYLINDRISKT ANSLAG | SYLINTERIRAJOITIN | PIEDICA CILINDRICA |
| DENMARK LABELS | DEKALER DANMARK | ETIKETTI TANSKA | |
| DIFFERENTIAL CIRCUIT BREAKER | JORDFELSBRYTARE | DIFFERENTIAALIKATKAISIN | DISJUNCTOR (INTRERUPATOR) DIFERENTIAL |
| DIRECTION CENTRE PIN | MITTAXEL FÖR STYRNING | OHJAUKSEN KESKIAKSELI | AX CENTRAL DE DIRECTIE |
| DIRECTION LEVER | PITMANARM | OHJAUSVIPU | LEVIER DE DIRECTIE |
| DIRECTION PIVOT | STYRBULT | OHJAUSTAPPI | PIVOT DE DIRECTIE |
| DISK | SKIVA | LEVY | DISC, PLACA |
| DISTRIBUTION BLOCK | FÖRDELNINGSENHET | JAKELULOHKO | BLOC DE DISTRIBUTIE |
| DOCUMENT BOX | DOKUMENTHÅLLARE | ASIAKIRJALAATIKKO | CUTIE PENTRU DOCUMENTE |
| DOUBLE ROD | DUBBELT RÖR | KAKSINKERTAINEN SAUVA | TUB DUBLU |
| DRAINAGE PLUG | AVTAPPNINGSPLUGG | TYHJENNYSTULPPA | BUSON DE SCURGERE |
| DRIVING AXLE-(TREE) | MOTORHJULAXEL | MOOTTORIAKSELI | |
| ELASTIC SHAFT RING | FJÄDERRING AXEL | ELASTINEN RENGASAKSELI | |
| ELECTRIC CLOGGING INDICATOR | KONTROLLAMPA FÖR ELEKTRISK TÄTNING | NÄKIJÄ JOKSEENKIN SÄHKÖSÄHKÖINEN | |

| English | Svenska | Suomi | Românà |
|---|---|---|---|
| ELECTRIC PUMP CONTACT SWITCH FITTING | MONTERING ELPUMPSKONTAKT | BERG ASETTUA YHTEYTEEN | |
| ELECTRICITY | ELEKTRICITET | SÄHKÖ | ELECTRICITATE |
| ELECTROPUMP UNIT | ELPUMPSAGGREGAT | SÄHKÖPUMPPUKONEISTO | GRUP ELECTRO-POMPA |
| EMPTYING AND FILLING | TÖMNING OCH PÅFYLLNING | TYHJENNYS JA TÄYTTÖ | GOLIRE SI UMPLERE |
| EQUAL T-PIECE | JÄMN T-KOPPLING | SAMANARVOINEN T-KAPPALE | TE EGAL |
| EQUAL T-PIECE JIC | JÄMN T-KOPPLING JIC | SAMANARVOINEN T-KAPPALE JIC | |
| EVEN BEND | JÄMNT KNÄRÖR | SAMANTASOINEN TAIVE | COT EGAL |
| EXTREMELY LOW-HEADED SCREW | SKRUV MED EXTREMT LÅGT HUVUD | MATALAPÄÄRUUVI | |
| FINLAND LABELS | FINLÄNDSKA DEKALER | ETIKETIT SUOMI | ETICHETE FINLANDA |
| FIXING COLLAR | LÅSRING | PYSÄYTYSRENGAS | BUCSA DE OPRIRE |
| FLANGE | FLÄNS | PIDIKE | BRIDA FLANSA CLAMA |
| FLANGED BEARING BUSH | RING MED KRAGE | KAULARENGAS | BUCSA LA FLANSA CU GULER |
| FLAT WASHER | FLAT BRICKA | LITTEÄ LAATTA | SAIBA PLATA |
| FLEXIBLE | SLANG | LETKU | FLEXIBIL |
| FLEXIBLE CHAIN SUPPORT | FÄSTE SLANGKOPPLING | JOUSTAVA KIINNITINTUKI | |
| FLEXIBLE COUPLINGS GUIDE STAR | FLEXIBEL STJÄRNGUIDE | TÄHTI OHJAIN JOUSTAVAT | |
| FLEXIBLE GUIDE CHAIN | CHAÎNE GUIDE FLEXIBLE | TAIPUISA OHJAUSKETJU | |
| FLEXIBLE GUIDE SUPPORT | FÄSTE FÖR FLEXIBEL STYRNING | JOUSTAVAN OHJAUKSEN TELINE | |
| FLEXIBLE PIN | ELASTISK PINNE | ELASTINEN KOURU | |
| FLEXIBLE SHEATH | MJUKT HÖLJE | PEHMEÄ SUOJA | INVELIS FLEXIBIL |
| FLOOR HEIGHT + LOAD LABEL | DEKAL, GOLVHÖJD + LAST | ETIKETTI POHJAN KORKEUS + KUORMA | |
| FLOW DIVIDER | FLÖDESDELARE | VIRTAUKSEN JAKAJA | DIVIZOR DE DEBIT |
| FOAM FILLING | PÅFYLLNING AV SKUM | VAAHTOTÄYTTÖ | |
| FOAM FILLING | PÅFYLLNING AV SKUM | VAAHTOTÄYTTÖ | |
| FRAME COWLING | HUV FÖR CHASSI | RUNGON SUOJAKOTELO | RASTURNARE SASIURI |
| FRANCE LABELS | DEKALER FRANKRIKE | ETIKETTI RANSKA | |
| FRONT HOOD | HUV FRAM | ETUKANSI | CAPOTA FATA |
| FUEL TANK | BRÄNSLETANK | POLTTOAINESÄILIÖ | REZERVOR DE CARBURANT |
| FUSE | SÄKRING | SULAKE | FUZIBIL |
| FUSE HOLDER | SÄKRINGSHÅLLARE | SULAKKEEN PIDIKE | PORT-FUZIBIL |

| English | Svenska | Suomi | Românà |
|---|---|---|---|
| GANTRY DRILLING | GENOMBORRNING AV LÄDA | KOTELON PORAUS | GAURIRE COFRET |
| GAS SPRING | GASFJÄDER | KAASUJOUSI | ARC PENTRU GAZ |
| GAUGE | MÄTARE | MITTALAITE | JOJA, DISPOZITII DE MASURARE |
| GB LABELS | BRITTISKA DEKALER | ETIKETIT GB | ETICHETE GB |
| GREEN ARROW | GRÖN PIL | VIHREÄ NUOLI | SAGEATA VERDE |
| GUIDE PAD | STYRMED | OHJAUSLUISTIN | PATINA DE GHIDAJ |
| GUIDE RING | GLIDBUSSNING | OHJAUSRENGAS | INEL/BUCSA DE GHIDARE |
| HARNESS | SELE | VALJAAT | |
| HEAD | HUVUD | PÄÄ | CAP |
| HEAT CONTACT | TERMOKONTAKT | LÄMPÖKOSKETUS | TERMO CONTACT |
| HEX CAP SCREW | SKRUV MED GROPIG YTA | RUUVI MALJAPÄÄ | |
| HIGH SPEED CUT-OFF | AVSTÄNGNING HÖG HASTIGHET | SUUREN NOPEUDEN VIRRANKATKAISU | TAIETURA G.V. |
| HINGE PIN | LEDBULT | LIITOSAKSELI | AX ARTICULATIE |
| HOLDER | FÄSTE | TUKI | SUPORT |
| HOLLAND LABELS | NEDERLÄNDSKA DEKALER | ETIKETIT HOLLANTI | ETICHETE OLANDA |
| HOOD | HUV | KANSI | CAPOTA, CARCASA |
| HOOD STOP | HUVANSLAG | KANNEN RAJOITIN | PIEDICA DE CAPOTA |
| HOSE TIGHTENING IRON | FASTSPÄNNINGSPLÅT FÖR SLANGAR | JOUSTOKIRISTYSLAATTA | PLACA DE STRANGERE FLEXIBILA |
| HYDRAULIC DIAGRAM | HYDRAULISKT SCHEMA | HYDRAULIIKKAKAAVIO | SCHEMA HIDRAULICA |
| HYDRAULIC PARTITION | HYDRAULISK SKILJEVÄGG | HYDRAULINEN VÄLISEINÄ | GARNITURA HIDRAULICA |
| HYDRAULIC PUMP | HYDRAULPUMP | HYDRAULINEN PUMPPU | POMPA HIDRAULICA |
| HYDRAULIC RESERVOIR | HYDRAULBEHÅLLARE | HYDRAULINEN SÄILIÖ | REZERVOR PENTRU INSTALATIA HIDRAULICA |
| HYDRAULIC RESERVOIR KIT | SATS FÖR HYDRAULBEHÅLLARE | HYDRAULINEN SÄILIÖSARJA | KIT REZERVOR HIDRAULIC |
| INTERNAL COMBUSION ENGINE | FÖRBRÄNNINGSMOTOR | LÄMPÖMOOTTORI | MOTOR TERMIC |
| ITALY LABELS | DEKALER ITALIEN | ETIKETTI ITALIA | |
| JIB CYLINDER | JIBBCYLINDER | RIIPPUVAIJERI | VERIN PENDULAR |
| JIB RAISING JACK | DOMKRAFT FÖR LYFTNING AV KRANARM | NOSTURIN PUOMIN NOSTOSYLINTERI | CRIC DE RIDICARE BRAT/ SAGEATA |
| JIC NUT | | JIC -MUTTERI | |
| JUNCTION | SKARV | LIITOS | LEGATURA |
| LABELS | ETIKETTER | | ETICHETE |

| English | Svenska | Suomi | Românà |
|---|---|---|---|
| LABELS | DEKALER | ETIKETIT | ETICHETE |
| LAMP | LAMPA | LAMPPU | LAMPA |
| LEFT HOOD | HUV VÄNSTER | VASEN KANSI | CAPOTA STANGA |
| LEFT LINK | VÄNSTER STAG | VASEN TANKO | BIELETA STANGA |
| LEFT WHEEL | VÄNSTER HJUL | VASEN PYÖRÄ | ROATA STINGA |
| LEVEL | NIVÅ | KORKEUS | NIVEL |
| LEVER | SPAK | VIPU | LEVIER |
| LEVER-OPERATED SEALED LATCH | TÄT SPÄRRHAKE MED SPAK | VIVUN TIIVISTYSSALPA | ZAVOR ETANSARE LA LEVIER |
| LINING HOLDER PLATE | PACKNINGSHÅLLARE | PÄÄLLYSTETTY KIINNITYSLAATTA | PLATOU PORT-GARNITURA |
| LOAD ON ONE WHEEL | BELASTNING PÅ 1 HJUL | KUORMA YHDELLÄ PYÖRÄLLÄ | ÎNCARCATURA PE O ROATA |
| LOCK BOLT / PLUG SCREW | LOCK | KORKKI | |
| LOCK NUT | LÅSMUTTER | JARRUMUTTERI | PIULITA DE FRANARE/ CONTRAPIULITA |
| LOCK NUT | LÅSMUTTER | LUKITUSMUTTERI | CONTRA-PIULITA |
| LOGO | GRAFISK FRAMSTÄLLNING | GRAAFINEN | GRAFIC |
| LOWER PART CHASSIS | UNDRE CHASSIPARTI | ALUSTAN ALAOSA | SASIU PARTE PROEMINENTA |
| LOWER PENDULAR TIE ROD | PENDULÄR FÖRANKRINGSANORDNING | PULTTI | |
| LOW-HEADED KNURLED SCREW | LETTRAD SKRUV | RUUVI PYÖLLETTY PÄÄ | |
| LOXAM BASKET SAFETY SYSTEM | KORGENS SÄKERHETSANORDNING | LOXAM -KORIN TURVALLISUUS | CUSCA DE PROTECTIE LOXAM |
| MALE CONNECTION | NIPPEL | UROSKAPPALE | RACORD JICLOR |
| MALE UNION PIECE | ANSLUTNING AV HANTYP | UROSLIITOS | LEGATURA |
| MANUAL | HANDBOK | OHJEKIRJA | MANUAL |
| MANUAL EMERGENCY OPERATION | MANUELLT AVHJÄLPANDE UNDERHÅLL | MANUAALINEN KORJAUS | DEPANAJ MANUAL |
| MANUFACTURER’S PLATE | TILLVERKARSKYLT | RAKENNUSLEVY | PLACA DE BAZA/ CONSTRUCTOARE |
| MINIMESS TAP | MINIMESS-UTTAG | MINIMESS-OTTO | PRIZA MINIMESS |
| MODIFICATION | ÄNDRING | MUUTOS | MODIFICARE |
| MOTOR | MOTOR | MOOTTORI | MOTOR |
| MOTOR AXLE COVER | KÅPA PÅ MOTORAXEL | MOOTTORIAKSELIN KANSI | |
| MOTOR GUIDING AXLE | DRIV- OCH STYRAXEL | VETOAKSELI | OSIE MOTO-CONDUCATOARE |

| English | Svenska | Suomi | Românà |
|---|---|---|---|
| MOTOR OIL HEATER | MOTOROLJEVARMARE | MOOTTORIOLJYLAMMITIN | INCALZITOR ULEI MOTOR |
| MOTOR OIL REFRIGERANT | KYLMEDEL FÖR MOTOROLJA | JÄÄKAAPPI HIILESTÄÄ AIHE | |
| MOTOR PARTITION | MOTORNS SKILJEVÄGG | MOOTTORIVÄLISEINÄ | GARNITURA DE MOTOR |
| MOTOR TANK BASE | MOTORTANKENS BOTTENPLATTA | MOOTTORIALTAAN TAKAOSA | CARTER MOTOR |
| MOUNTING FLANGE (MOTOR) | FIXERINGSREM FÖR MOTOR | MOOTTORIN KIINNITYSLAIPPA | |
| NON MARKING TYRE | DÄCK "UTAN BETECKNING" | NO MARKING -RENGAS | CAUCIUC "NO MARKING" |
| NOTCHED CONNECTION | TANDADE ANSLUTNINGSSTYCKEN | LOVETTU LIITOSKAPPALE | RACORD CU COLIER DE STRANGERE |
| NUT | MUTTER | MUTTERI | PIULITA |
| OIL FILTER SUPPORT | OLJEFILTRETS FÄSTE | KANNATIN SIIVILÖITYÄ AIKAA HIILESTÄÄ | |
| OIL FOR HOT COUNTRIES | OLJA FÖR VARMA KLIMAT | ÖLJY LÄMPIMÄT MAAT | ULEI PENTRU TARILE CALDE |
| ON/OFF MOVEMENTS BLOCK | RÖRELSEBLOCK – ALLT ELLER INGENTING | KAIKKI TAI EI MITÄÄN –LOHKO | BLOC MISCARE TOTUL SAU NIMIC |
| ONE-WAY DOUBLE VALVE | DUBBEL BAKSLAGSVENTIL | KAKSINKERTAINEN PALAUTUKSENESTOLÄPPÄ | CLAPETA ANTI - RETUR DUBLU |
| ONE-WAY VALVE | BAKSLAGSVENTIL | PALAUTUKSENESTOLÄPPÄ | CLAPETA ANTI - RETUR |
| OPERATOR'S MANUAL | EG-MANUAL | KÄSIKIRJA CE | MANUAL CE |
| OPTION | TILLVAL | VAIHTOEHTO | OPTIUNE |
| ORGANIC OIL | BIOLOGISK OLJA | HIILESTÄÄ BIOLOGINEN | |
| O-RING | O-RING | O-RENGASTIIVISTE | MANSETA DE ROTATIE |
| PACKING BOX | PACKBOX | HIDASTIN | PRESARE GARNITURA |
| PAD | GLIDYTA | LUISTIN | PATINA |
| PAD UNDER MOTOR SUPPORT | PATIN SOUS SUPPORT MOTEUR | MOOTTORITELINEEN ALLA OLEVA JALAS | |
| PEDAL | PEDAL | POLJIN | PEDALA |
| PENDULAR | SVÄNGARM | VÄRÄHTELEVÄ PUOMI | PENDULAR |
| PENDULAR CONNECTOR | SKARVDEL PEND. | LIITOSKAPPALE | |
| PENDULAR RAISING CYLINDER | DOMKRAFT FÖR LYFTNING AV SVÄNGARM | VÄRÄHTELEVÄ NOSTOSYLINTERI | CRIC DE RIDICARE PENDULAR |
| PILOT-OPERATED CHECK VALVE | STYRD BAKSLAGSVENTIL | OHJATTU PALAUTUKSENESTOLÄPPÄ | CLAPETA ANTI - RETUR PILOTATA |
| PIN | AXEL | AKSELI | AX |
| PIN COVER | BULTHUV | AKSELIN SUOJAKUPU | CAP DE AXA |
| PIN STOP | AXELSTOPP | AKSELIN PYSÄYTYS | OPRIRE AX |

| English | Svenska | Suomi | Românà |
|---|---|---|---|
| PIN STOP PLATE | STOPPBRICKA FOR AXEL | AKSELIN PYSAYTYSLEVY | PLACHETA OPRIRE AX |
| PIPE | RÖR | PUTKI | TEAVA |
| PISTON | KOLV | MÄNTÄ | PISTON |
| PLASTIC SPIRAL HOSE | FLEXIBEL PLASTSPIRAL | JOUSTAVA MUOVISPIRAALI | SPIRALA PLASTIC SUBTIRE |
| PLATE | PLÅT | PELTI | TOLA/TABLA |
| PLATFORM | PLATTFORM | ALUSTA | PLATFORMA |
| PLATFORM + JIB | KORG + PENDELAXEL | KORI + HEILURIVARSI | NACELA + PENDULAR |
| PLATFORM CABINET | KOPPLINGSDOSA FÖR PLATTFORM | KEHILÖKOTELO | CUTIE NACELA |
| PLATFORM ELECTRICITY | ELEKTRICITET KORG | KORIN SÄHKÖ | ELECTRICITATE NACELA |
| PLATFORM SUPPORT | FÄSTE FÖR PLATTFORM | KUORMAUSLAVATUKI | SUPORT PLATFORMA |
| PLATFORM WITH WEIGHING-ROTATION | KORG MED VÄGNING-ROTATION | KORI, JOSSA PUNNITUS-ROTAATIO | NACELA CU CINTAR-ROTATIV |
| PLUG | STICKKONTAKT | PISTOKE | FISA |
| PLUG | PLUGG | TULPPA | DOP, CAPAC INSURUBAT, BUSON |
| PLUG SEAL | PACKNING FÖR LOCK | KORKIN TIIVISTE | GARNITURA DE BUSON |
| PLUG SOCKET | UTTAG | OTTO | PRIZA |
| POINTER | PLATTA | REUNALISTA | REGLETA |
| PORTUGAL LABELS | PORTUGISISKA DEKALER | ETIKETIT PORTUGAL | ETICHETE PORTUGALIA |
| POSITION SWITCH | LÄGESBRYTARE | ASEMOINTIKYTKIN | INTRERUPATOR DE POZITIE |
| PRESSURE CONTROLLER | TRYCKKONTAKT | KOSKETIN | MANOCONTACT |
| PRESSURE FILTER | TRYCKFILTER | PAINESUODATIN | FILTRE DE PRESIUNE |
| PRESSURE LIMITER | TRYCKBEGRÄNSARE | PAINEEN RAJOITIN | LIMITATOR DE PRESIUNE |
| PRESSURISED LIQUID LABEL | DEKAL "VÄTSKA UNDER TRYCK" | ETIKETTI PAINEENALAINEN NESTE | ETICHETA FLUID SUB PRESIUNE |
| PROFILED SECTION | PROFILARTIKEL | PROFIILIRAUTA | PROFILAT |
| PROTECTIVE PLATE | SKYDDSPLÅT | SUOJALAATTA | PLACA DE PROTECTIE |
| PROTECTIVE PLATE | SKYDDSPLÅT | ARKKI RAUTA JOKSEENKIN LUONNONSUOJELU | |
| RAIL BAR | KONTAKTSKENA | BARETTE-KISKO | PUNTE SINA |
| REAR HOOD | HUV BAK | TAKAKANSI | CAPOTA SPATE |
| RED ARROW | RÖD PIL | PUNAINEN NUOLI | SAGEATA ROSIE |
| REDUCER | REDUCERVÄXEL | HIDASTIN | REDUCTOR |
| REDUCER PACKING BOX | REDUCERANDE PACKBOX | HOLKKITIIVISTEEN HIDASTIN | PRESARE GARNITURA REDUCTOR |

| English | Svenska | Suomi | Românà |
|---|---|---|---|
| REDUCTION | REDUCERING | HIDASTIN | REDUCTIE |
| RETAINER | SPÄRRBRICKA | PIDÄTYSLAATTA | PLACA DE ANCORAJ |
| RETAINING BRACKET | FÄSTKRAMPA | KIINNITYSHAKA | SUPORT DE FIXARE |
| RFA LABELS | DEKALER RFA | ETIKETIT RFA | ETICHETE RFA |
| RIGHT HOOD | HUV HÖGER | OIKEA KANSI | CAPOTA DREAPTA |
| RIGHT LINK | HÖGER STAG | OIKEA TANKO | BIELETA DREAPTA |
| RIGHT NUT | MUTTER TILL HÖGER | OIKEA MUTTERI | PIULITA CU FILET DREAPTA |
| RIGHT WHEEL | HÖGER HJUL | OIKEA PYÖRÄ | ROATA DREAPTA |
| RIGHT-HAND STANDARD LUBRICATOR | SMÖRJARE STANDARD RAK | OIKEA VAKIORASVAIN | |
| RIGID | STYV | JÄYKKÄ | RIGID |
| RIM | FÄLG | VANNE | JANTA |
| RING | KRANS | HAMMASKEHÄ | COROANA |
| RING | RING | RENGAS | BUCSA |
| RING | RING | RENGAS | INEL |
| ROD | STÅNG | OHJAIN | TIJE |
| ROLLER | RULLE | RULLA | RULOU |
| ROLLER | RULLE | TELA | ROLA |
| ROTARY AXLE CONNECTOR PIECE | ROT. AXEL FÖRBINDELSEDEL | PYÖRIVÄN AKSELIN YHDISTYSKAPPALE | |
| ROTATING CROSSTAIL | OMVÄND VRIDBAR T-KOPPLING | YLÖSALAISIN KÄÄNNETTY PYÖRIVÄ T-KAPPALE | TE ROTATIV RASTURNAT/ INVERSAT |
| ROTATING EQUAL T-PIECE | JÄMN VRIDBAR T-KOPPLING | PYÖRIVÄ SAMANARVOINEN T-KAPPALE | TE EGAL ROTATIV |
| ROTATION AXIS | ROTATIONSAXEL | PYÖRINTÄAKSELI | AX DE ROTATIE |
| ROTATION DETECTOR PAD | FOT FÖR DETEKTERING AV ROTATION | PYÖRINNÄNHAVAINNOINTIJALAS | PATINA DETECTOR ROTATIE |
| RUBBER WASHER | FJÄDERBRICKA | JOUSTOLAATTA | SAIBA ELASTICA |
| SCREW | SKRUV | RUUVI | SURUB |
| SEAL | TÄCKPLÅT | SULJIN | OBTURATOR |
| SEAL | PACKNING | TIIVISTE | GARNITURA |
| SELF-LOCKED NUT | SJÄLVLÅSANDE MUTTER | ITSEJARRUTTAVA MUTTERI | PIULITA CU AUTOFRINARE |
| SELF-STOPPING METAL NUT | SJÄLVLÅSANDE METALLMUTTER | METALLINEN ITSEJARRUTUSMUTTERI | |
| SEMI-FLANGE | HALVBRO | PUOLILAIPPA | |
| SENSOR STOP | STOPP AV GIVARE | ANTURIN PYSÄYTYS | OPRIRE CAPTOR |

| English | Svenska | Suomi | Românà |
|---|---|---|---|
| SEPARATOR | SEPARATOR | EROTTAJA | SEPARATOR |
| SET SCREW | STÄLLSKRUV | SÄÄTÖRUUVI | SURUB DE REGLAJ |
| SHAFT PIN | LÅSRING FÖR BULT | VÄLIHAKA-AKSELI | ROLE AC |
| SHEATH | KANAL | VAIPPA | CANAL |
| SIDE PAD SUPPORT | FÄSTE SIDOFOT | KANNATIN JALAS SIVU | |
| SINGLE-POLE TOGGLE SWITCH | INTERRUPTEUR UNIPOLAIRE À MED SPAK | VIVULLA VARUSTETTU YKSINAPAINEN KYTKIN | INTRERUPATOR UNIPOLAR LA LEVIER |
| SLEW RING | RIKTNINGSKRANS | SUUNTAUKSEN HAMMASKEHÄ | COROANA DE ORIENTARE |
| SLEWING ROD | INSTÄLLNINGSSPINDEL | OHJAUSKARA | BROSA DE ORIENTARE |
| SLIDING BAR | SKJUTBAR STÅNG | LUISTINTANKO | |
| SLOTTED SCREW | KLUVEN SKRUV | HALKAISTU RUUVI | |
| SMOOTH MALE SLOT | SLÄT YTTERKÅPA | SILEÄ UROSSUOJUS | PLACA NETED |
| SNIFFER | SNYFTVENTIL | HUOHOTIN | RECIPIENT ( BUTELIE ) PENTRU AER |
| SNIFFING VALVE AIR FILTER | REGLERVENTIL LUFTFILTER | ILMASUODATTIMEN TUULETUSPUTKI | |
| SNIFFING VALVE SUPPORT | FÄSTE REGLERVENTIL | TUULETUSPUTKEN TUKI | |
| SOCKET | HYLSA | HOLKKI | DULIE, SOCLU |
| SPAIN LABELS | SPANSKA DEKALER | ETIKETIT ESPANJA | ETICHETE SPANIA |
| SPARE PARTS CATALOGUE | RESERVDELSKATALOG | LUETTELO PR | CATALOG |
| SPOTLIGHT | STRÅLKASTARE | KUVANHEITIN | PROIECTOR |
| SPRING WASHER | FJÄDERRING | JOUSILAATTA | SAIBA ARCUITOARE/ELASTICA |
| STARTER | STARTMOTOR | KÄYNNISTIN | DEMAROR |
| STARTER ALTERNATOR CABLING | KABLAR FRÅN VÄXELSTRÖMSGENERATORN | KAAPELOIDA JOKSEENKIN L'ALTERNATEUR AIKAA ALKU | |
| STARTING BATTERY | STARTBATTERI | KÄYNNISTYSPARISTO | ACUMULATOR DE PORNIRE |
| STEERING BAR | LÄNKSTÅNG | OHJAUSTANKO | BARA DE DIRECTIE |
| STEERING CYLINDER | STYRNINGSDOMKRAFT | OHJAUSSYLINTERI | CRIC DE DIRECTIE |
| STEERING PIN SLOT | AXEL FÖR STYRKÅPA | OHJAUKSEN SUOJUSAKSELI | AX CAP DE DIRECTIE |
| STEERING YOKE | STYRVÄXELKÅPA | OHJAIMEN SUOJUS | CAP DE DIRECTIE |
| STOP | ANSLAG | RAJOITIN | PIEDICA OPRITOR |
| STOP PAD | STOPPDYNA | PIDÄKELEIMA | TAMPON DE AMORTIZARE |
| STOP WASHER | LÅSFJÄDER | PYSÄYTYSLAATTA | SAIBA/RONDELA DE SIGURANTA |
| STRENGTHENER | FÖRSTÄRKNING | VAHVIKE | INTARIRE |

| English | Svenska | Suomi | Românà |
|---|---|---|---|
| STUD | GÄNGTAPP | TAPPI | TIRANT, SURUB CU FILET LA AMBELE CAPETE |
| SUPPLY | MATNING | SYÖTTÖ | ALIMENTARE |
| SUPPORT FLAT | STÖDPLATTA | TUKILAATTA | PLATOU SUPORT |
| SUPPORT WASHER | STÖDBRICKA | OHUT VIIPALE | |
| SWIVEL ARMS | VRIDBARA ARMAR | NIVELÖITY VARSI | |
| TELESCOPE | TELESKOP | TELESKOOPPI | |
| TELESCOPE REAR PAD | PATIN ARRIÈRE TÉLESCOPE | TELESKOOPIN TAKAJALAS | |
| TELESCOPIC ACTION JACK | DOMKRAFT FÖR SAMMANDRAGNING | TELESKOOPPISYLINTERI | CRIC DE LEGATURA TELESCOPICA |
| TELESCOPIC BOOM | TELESKOPISK KRANARM | TELESKOOPPIPUOMI | SAGEATA (BRAT) TELESCOPIC |
| TERMINAL PARTITION BLOCK | SLUTVÄGGSBLOCK | VÄLISEINÄLOHKO PÄÄTE | BLOC ÎNCHIDERE TERMINALA |
| TERRESTRIAL INTERFACE BLOCK | JORDANSLUTNINGSBLOCK | MAALIITOSLOHKO | BLOC DE LEGATURA LA PAMÂNT |
| THERMAL MOTOR SUPPORT | FÄSTE, FÖRBRÄNNINGSMOTOR | LÄMPÖMOOTTORIN TELINE | |
| THERMAL MOTOR UNIT + PUMP | AGGREGAT MED FÖRBRÄNNINGSMOTOR + | SITOA KIMPUKSI AIHE + PUMPPU | |
| THERMAL SWITCH | TERMOKONTAKTOR | LÄMPÖKOSKETIN | TERMO CONTACTOR |
| THIN NUT | NEDRE MUTTER | ALAMUTTERI | PIULITA JOS |
| THREADED ROD | GÄNGAD STÅNG | KIERREVARSI | TIJA FILETATA |
| THRUST COLLAR | STOPPRING | RAJOITINRENGAS | BUCSA OPRITORULUI |
| THRUST WASHER | TRYCKBRICKA | RAJOITINLAATTA | INEL OPRITOR/LIMITATOR |
| TIGHTENING COLLAR | SLANGKLÄMMA | LETKUNKIRISTIN | COLIER DE STRINGERE |
| TIGHTENING IRON | FASTSPÄNNINGSPLÅT | KIRISTYSLAATTA | PLACA DE STRANGERE |
| TIGHTENING PAD | SPÄRRFOT | KIRISTYSKOUKKU | PATINA DE STRÂNGERE |
| TILT DETECTOR | LUTNINGSDETEKTOR | KALTEVUUSANTURI | DETECTOR DE DEVERSARE |
| TILT DETECTOR CABLING | LUTNINGSKABLAR | KAAPELOIDA | |
| TIRE | DÄCK | RENGAS | PNEU |
| TOOTH LOCK WASHER | TANDAD LÅSBRICKA | HAMMASLAATTA | INEL DINTAT |
| TOP ARM | HÖG ARM | YLÄPUOMI | BRAT INALT |
| TOP COVER | HÖGER HUV | YLÄSUOJUS | CARCASA SUPERIOARA |
| TOP TIE ROD | ÖVRE DRAGBULT | YLÄVETOTANKO | TIRANT SUS/INALT |
| TRAVEL BLOCK | ÖVERFÖRINGSENHET | KULJETUSLOHKO | BLOC DE TRANSLATIE |
| TRAVEL REDUCER | REDUCERVÄXEL FÖR FÖRFLYTTNING | KULJETUKSEN HIDASTIN | REDUCTOR DE TRANSLATIE |
| TRUNKING | RÖR | KOURU | PALNIE |

| English | Svenska | Suomi | Românà |
|---|---|---|---|
| TURNTABLE BOX | CHASSISKÅP | KAANTOTORNIKAAPPI | LACAS TURELA |
| TURNTABLE ELECTRICITY | ELEKTRICITET CHASSI | ALAVAUNUN SÄHKÖ | ELECTRICITATE TURELA |
| TURRET | SVÄNGSKIVA | TORNI | TURELA |
| TURRET COWLING | HUV FÖR SVÄNGSKIVA | TORNIN SUOJAKOTELO | RASTURNARE TURELA |
| TURRET FRAME | CHASSI FÖR SVÄNGSKIVA | TORNIN RUNKO | SASIU TURELA |
| TURRET HYDRAULIC INSTALLATION | HYDRAULISK INSTALLATION SVÄNGSKIVA | TORNIN HYDRAULIIKKA-ASENNUS | INSTALATIE HIDRAULICA TURELA |
| TURRET/BOTTOM ARM PIN | AXEL FÖR UNDRE ARM / SVÄNGSKIVA | ALAPUOMIN AKSELI / TORNI | AX BRAT DE JOS/TURELA |
| TURRET/BOTTOM ARM PIN | SVÄNGSKIVA / ARM | TORNI / PUOMI | TURELA / BRAT |
| TURRET/BOTTOM TIE ROD PIN | AXEL FÖR UNDRE DRAGBULT / SVÄNGSKIVA | ALAVETOTANGON AKSELI / TORNI | AX TIRANT DE JOS/TURELA |
| UNION PIECE | FÖRBINDNING | LIITOS | LEGATURA |
| UNION PIECE | STABIL FÖRBINDNING | SAMANARVOINEN LIITOS | LEGATURA EGALA |
| UPPER PENDULAR ARM | ÖVRE SVÄNGARM | YLÄVARSI | |
| VALVE | KRAN | HANA | ROBINET |
| VALVE | VENTIL | ESTOLÄPPÄ | SUPAPA CLAPETA (DE RETINERE) |
| WARRANTY ACTIVATION LABEL | DEKAL "AKTIVERING AV GARANTI" | TARRA "TAKUUN AKTIVOINTI" | ETICHETA"ACTIVITATE GARANTIE" |
| WASHER | BRICKA | LAATTA | RONDELA SAIBA INEL |
| WEAR PAD | SLITYTA | KISKOLUISTIN | PATINA DE UZURA |
| WHEEL NUT | HJULMUTTER | PYÖRÄMUTTERI | PIULITA DE ROATA |
| WHEELS | HJUL | PYÖRÄT | ROTI |
| WHITE DIESEL | VIT DIESELOLJA | DIESELÖLJY VALKOINEN | BENZINA ALBA |
| WIDE BASKET | STOR KORG | EVÄSKORI VAPAUTTAA | |
| WIRING HARNESS CABLING | KABELMATTA | KIMPUN KAAPELOINTI | CABLARE FASCICUL |
| WOODRUFF KEY | PARALLELL KIL | PITKITTÄISKIILA | PANA PARALELA |
| WORK HEADLIGHT | ARBETSBELYSNING | TYÖLAMPPU | |
| WORM AND TORQUE HUB | MOMENTNAV OCH ÄNDLÖS SKRUV | NAVAN VÄÄNTÖMOMENTTI JA PÄÄTÖN RUUVI | BUTUCUL CUPLEI SI SURUBUL FARA SFARSIT |
| WORM SCREW | SNÄCKA. ÄNDLÖS SKRUV | PÄÄTÖN RUUVI | SURUB FARA FIN |
| WORM WHEEL | TANGERANDE HJUL | TANGENTTIPYÖRÄ | ROATA TANGENTA |
| YELLOW AND BLACK ADHESIVE MARKING | SJÄLVHÄFTANDE MÄRKNING GUL OCH SVART | KELTA-MUSTA TARRAMERKINTÄ | MARCAJ ADEZIV GALBEN SI NEGRU |
| | | | |